TUFFSTUFF FITNESS INTERNATIONAL

OWNER'S MANUAL

Maintenance & Assembly Instructions

IMPORTANT: KEEP THIS MANUAL FOR FUTURE REFERENCE

WARNING

Read and understand the Owner's Manual, all danger, warning and caution labels before using this equipment.

SXT-550

Deluxe Hybrid Trainer

SXT-550_Rev0
Revision Date 11-5-2015

Table of Contents

OVERHEAD SPECIFICATIONS ..... Page 3
DANGER, WARNING, & CAUTION LABELS INFORMATION ..... Page 4-9
IMPORTANT SAFETY INSTRUCTIONS ..... Page 10-11
REGISTRATION, SERVICE & ASSEMBLY ..... Page 12
INSPECTION/MAINTENANCE ..... Page 13
CABLE INSPECTION ..... Page 14
STEP 1-7 ..... Page 15-25
STEP 8 LAT CABLE ROUTING ..... Page 26-29
STEP 9-10 MID/LOW ROW CABLE ROUTING ..... Page 30-33
STEP 11 PRESS BAR CABLE ROUTING ..... Page 34-37
STEP 12 TENSION CABLE ROUTING ..... Page 38-39
STEP 13 LEG EXTENSION/CURL CABLE ROUTING ..... Page 40-41
STEP 14-16 ..... Page 42-44
PARTS LIST ..... Page 45-46
PRE-ASSEMBLED COMPONENTS ..... Page 47-53
BASIC EXERCISE GUIDE ..... Page 54-58
NOTES ..... Page 59
WARRANTY ..... Page 60

TuffStuff Fitness International Inc. continually engages in research related to product improvements. Please take the time to carefully read through this owner's manual thoroughly. Instructions contained in this owner's manual are not intended to cover all details or variations possible with equipment, or to cover every contingency that may be met in conjunction with assembly, installation, operation, maintenance or troubleshooting of the equipment. Even though we have prepared this owner's manual with extreme care, neither the manufacturer nor the author can accept responsibility for any errors in, or omission from, the information given. Should additional information be required, or should situations arise that are not covered by this owner's manual, the matter should be directed to Customer Service at TuffStuff Fitness International Inc. in Chino, California.

OVERHEAD SPECIFICATIONS

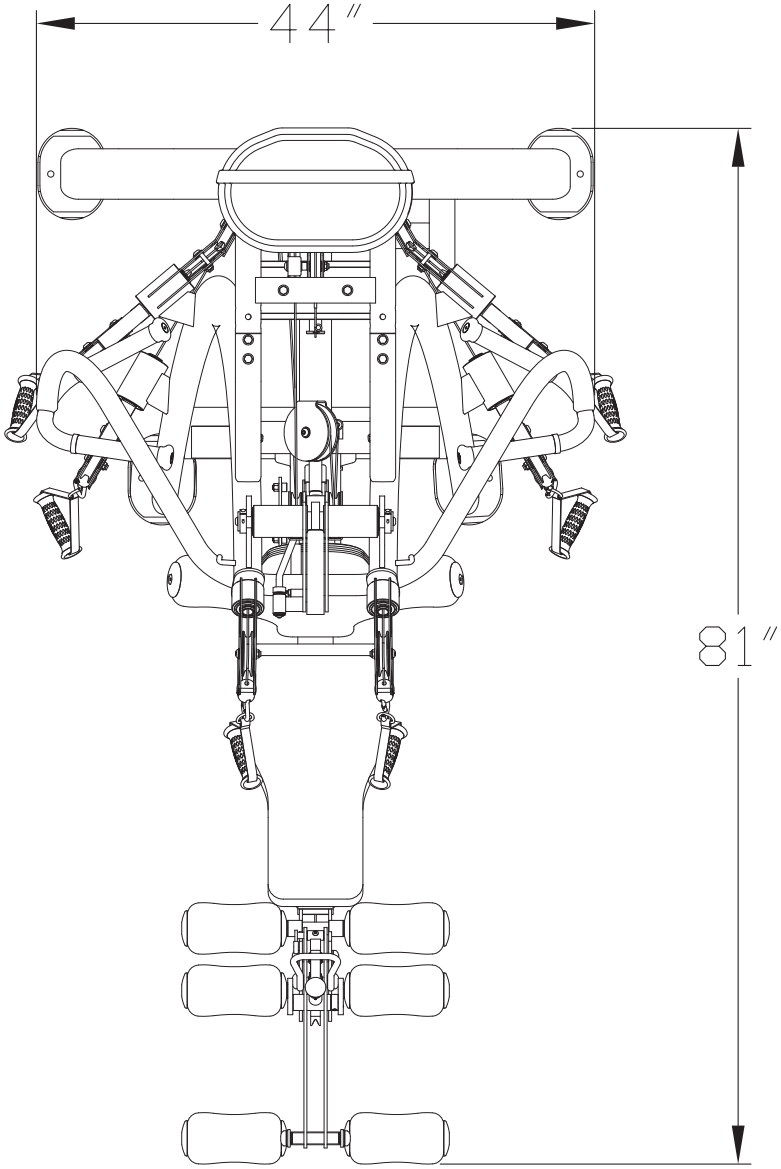

L 81″ X W 44″ X H 84″
PRODUCT WEIGHT 652 lbs.
MAX-LOAD WEIGHT LIMIT - 200 lbs.

Carefully read ALL Danger, Warning & Caution labels posted on the machine

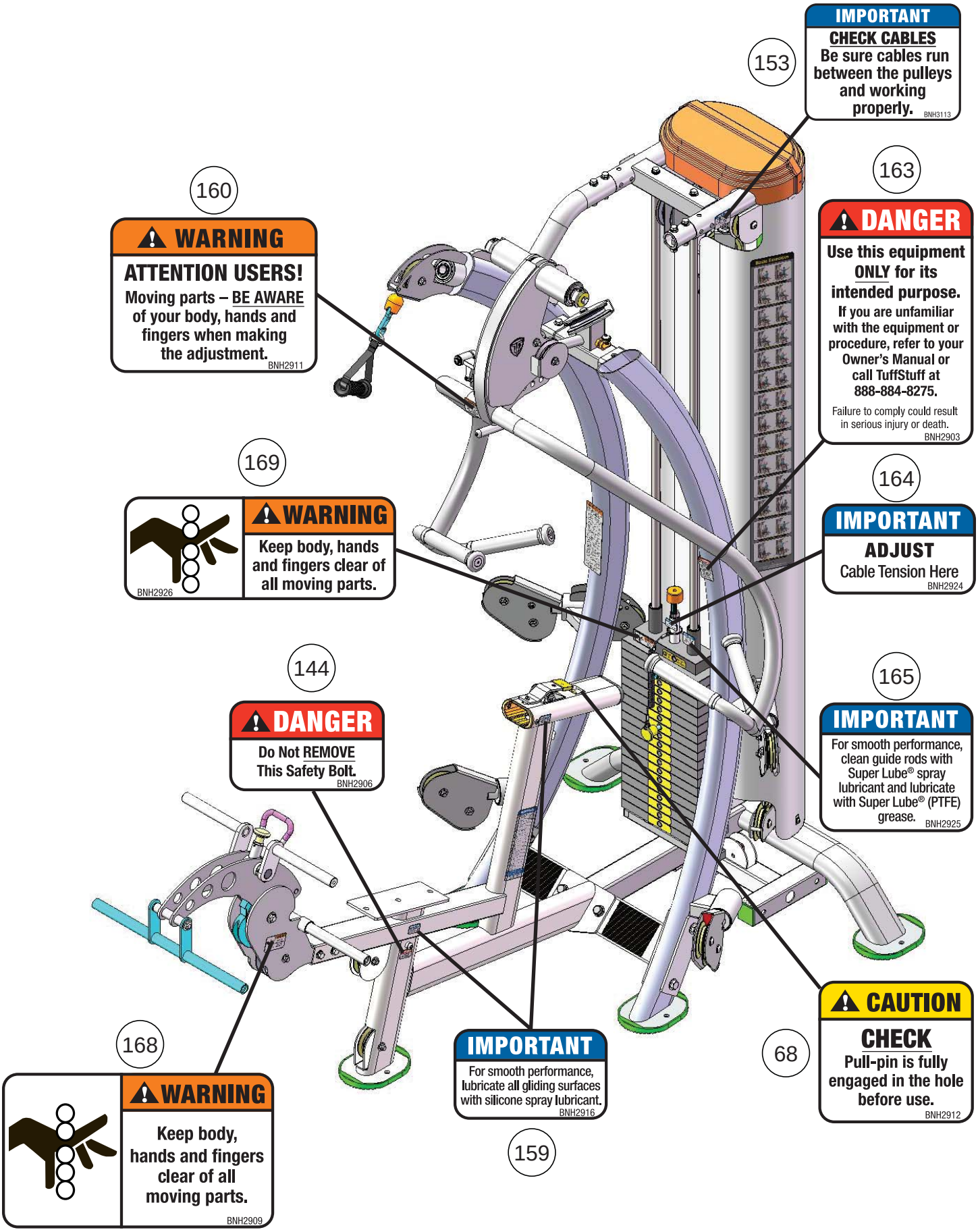

Carefully read ALL Danger, Warning & Caution labels posted on the machine

170

⚠ WARNING

Serious injury or death can occur if these rules are not followed:

Home Use Only

1. **Read and Understand the Owner's Manual,** all danger, warning and caution labels before using this equipment. If you need further assistance, call TuffStuff.
2. **Obtain a medical examination** before beginning any form of exercise program.
3. **Stop exercising** if you feel faint or dizzy. Call for help if you are experiencing pain.
4. **Inspect equipment** prior to use for wear and tear, loose fittings, worn or frayed cables and frame welds. Do not attempt to fix or free any jammed parts yourself. Call your TuffStuff Dealer.
5. **Use this equipment** only for the intended use and for exercises shown in the exercise label.
6. **Keep body, clothing and hair** clear from all moving parts.
7. **Children must not be allowed** near this machine. Teenager must be supervised.
8. **Make sure** the selector pin is fully inserted. Use only the factory selector pin provided.
9. **Do not modify** weight stack with any add-on weights.
10. **Do not remove** any labels on the machine. Replace if damaged.

TuffStuff Fitness International
Chino, CA 91710, USA.

BNH3157

166

INSPECTIONS

Home Use Only Recommended Inspection	DAILY	WEEKLY	MONTHLY	6-MONTH
INSPECT: Links, pull-pins, snap locks, swivels, connectors, selector pin, and welded-joints.	X			
CLEAN: Upholstery with lanolin-base cleaner. Do not use Windex.	X			
INSPECT: Cables and tension (adjust if needed).	X			
INSPECT: All labels		X		
INSPECT: All nuts and bolts (tighten if needed).		X		
INSPECT: Accessory bars, handles, rubber grips.		X		
INSPECT: All anti-skid surfaces.		X		
CLEAN & LUBRICATE: Clean guide rods with Super Lube® spray lubricant and lubricate with Super Lube® (PTFE) grease.			X	
LUBRICATE: Seat sleeves, pull-pin sliding mechanism, bushings and linear bearings.			X	
CLEAN & WAX: All powder-coat finishes.				X

Use only genuine TuffStuff replacement parts. Failure to do so will void warranty and could result in serious injury or death.

TuffStuff Fitness International
Chino, CA 91710, USA
www.tuffstuffitness.com

BNH3155

149

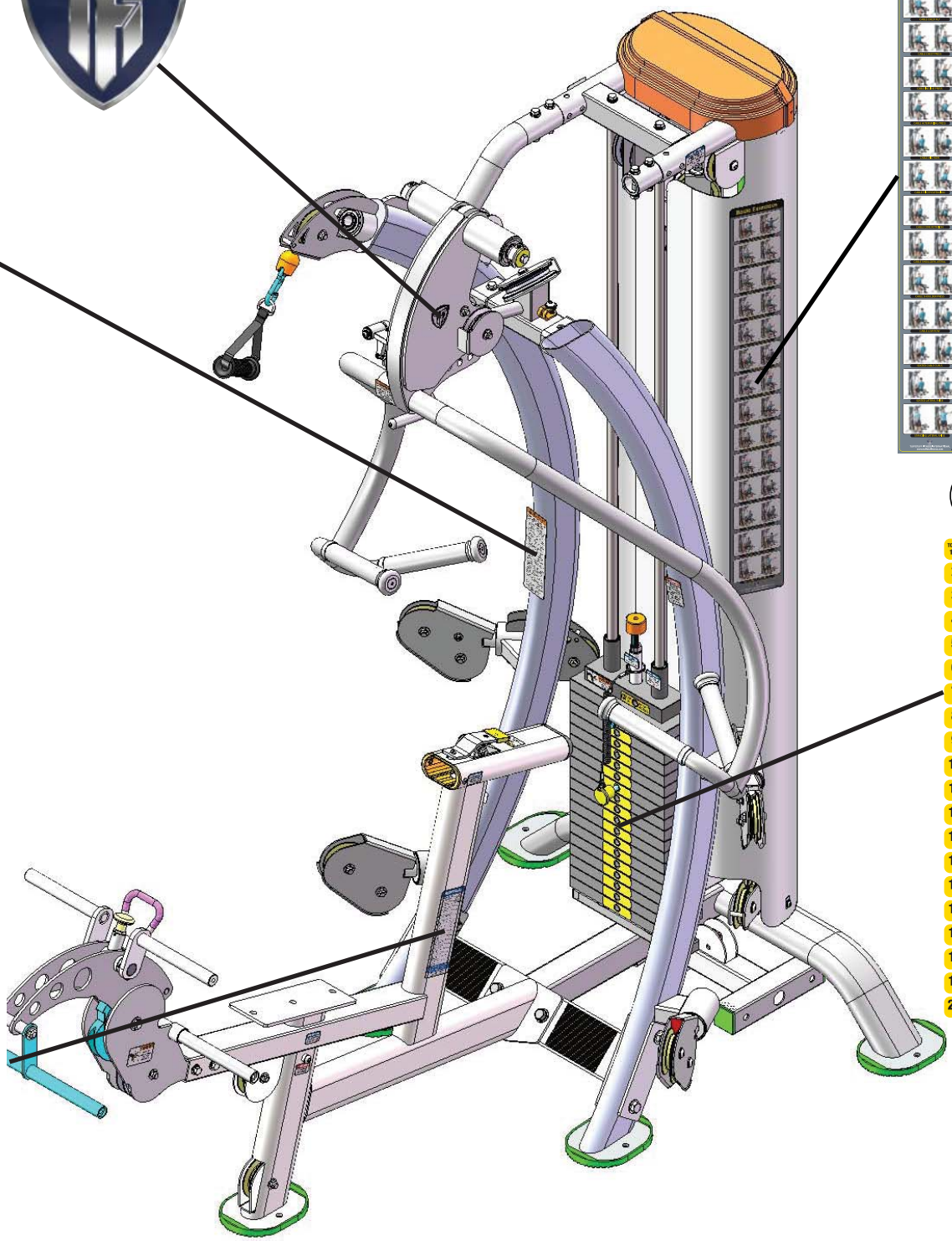

178

167

TOP PLATE 10 lbs.	TOP PLATE 4.5 kgs.
20 lbs.	9.1 kgs.
30 lbs.	13.6 kgs.
40 lbs.	18.1 kgs.
50 lbs.	22.7 kgs.
60 lbs.	27.2 kgs.
70 lbs.	31.8 kgs.
80 lbs.	36.3 kgs.
90 lbs.	40.8 kgs.
100 lbs.	45.4 kgs.
110 lbs.	49.9 kgs.
120 lbs.	54.4 kgs.
130 lbs.	59.0 kgs.
140 lbs.	63.5 kgs.
150 lbs.	68.0 kgs.
160 lbs.	72.6 kgs.
170 lbs.	77.1 kgs.
180 lbs.	81.6 kgs.
190 lbs.	86.2 kgs.
200 lbs.	90.7 kgs.

Carefully read ALL Danger, Warning & Caution labels posted on the machine

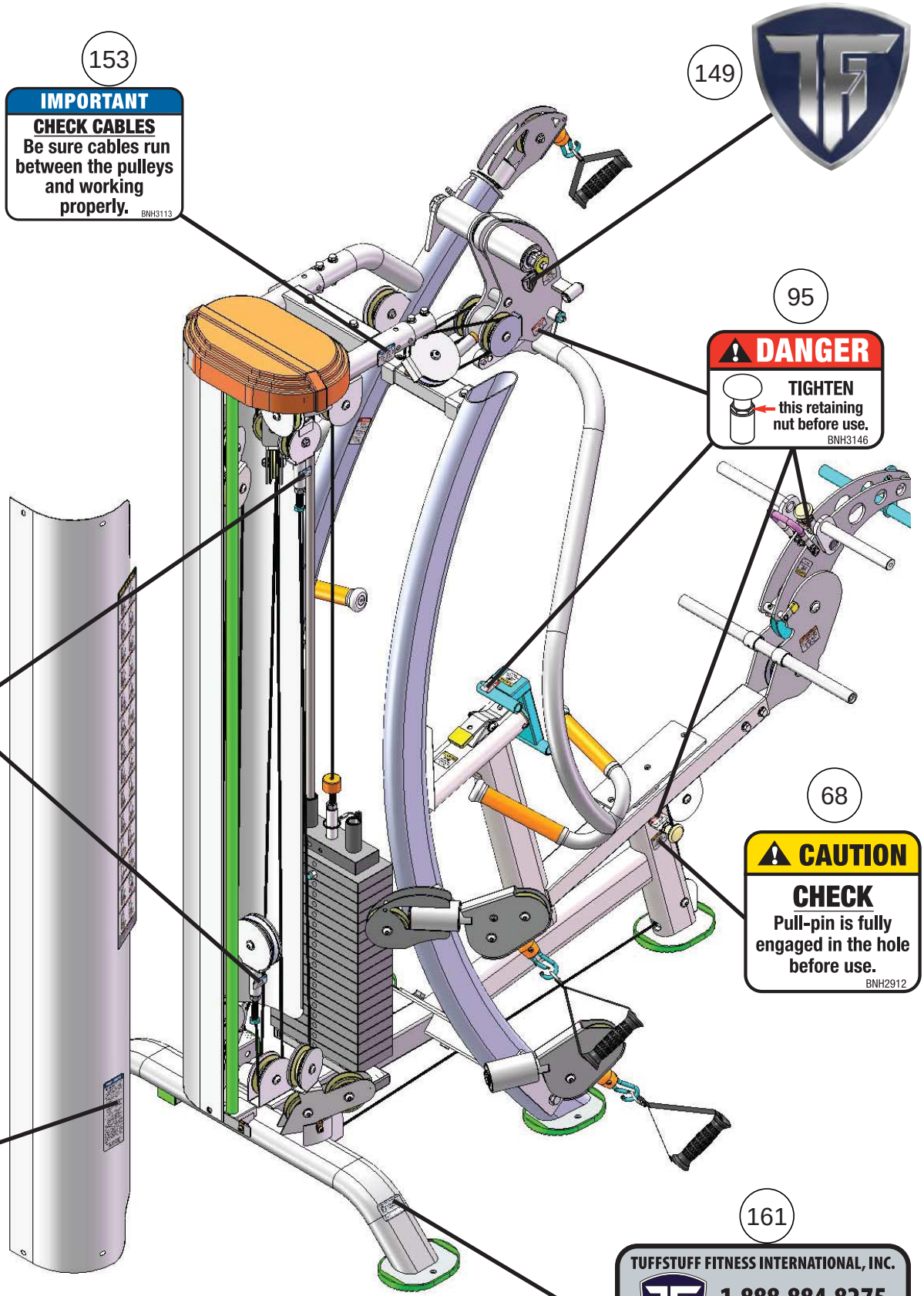

153

IMPORTANT

CHECK CABLES
Be sure cables run between the pulleys and working properly.
BNH3113

149

95

DANGER

TIGHTEN
this retaining nut before use.
BNH3146

164

IMPORTANT

ADJUST
Cable Tension Here
BNH2924

171

WARRANTY

HOME LIFETIME*

For the **LIFE** of the product while owned by the original purchaser from defects in material and workmanship.

***This warranty does not cover:**

1. TuffStuff products sold for and used in a commercial or institutional environment.
2. Any misuse, neglect, abuse, improper assembly & maintenance, or failure to follow instructions or warnings in the Owner's Manual and warning labels posted on the machines.
3. Use of this apparatus in a manner for which it was not designed.
4. Original product that is altered, or the use of replacement parts and components parts of another manufacturer other than TuffStuff.

All warranty periods begin to run from the date of purchase to the original purchaser. The obligation of TuffStuff under this warranty is limited to repairing or replacing warranted defective parts, as TuffStuff may elect, at TuffStuff's facility in Chino, California, without charge to the Purchaser for either parts or labor. Purchaser is responsible for installation of repaired or replaced parts, and all transportation and insurance costs to and from TuffStuff's facility in Chino. For a detailed copy of the warranty, please contact:

TuffStuff Fitness International
Chino, CA 91710, USA
www.tuffstuffitness.com
BNH3156

68

CAUTION

CHECK
Pull-pin is fully engaged in the hole before use.
BNH2912

161

TUFFSTUFF FITNESS INTERNATIONAL, INC.
1-888-884-8275
www.tuffstuffitness.com

MODEL
SERIAL #
BNH3147

Carefully read ALL Danger, Warning & Caution labels posted on the machine

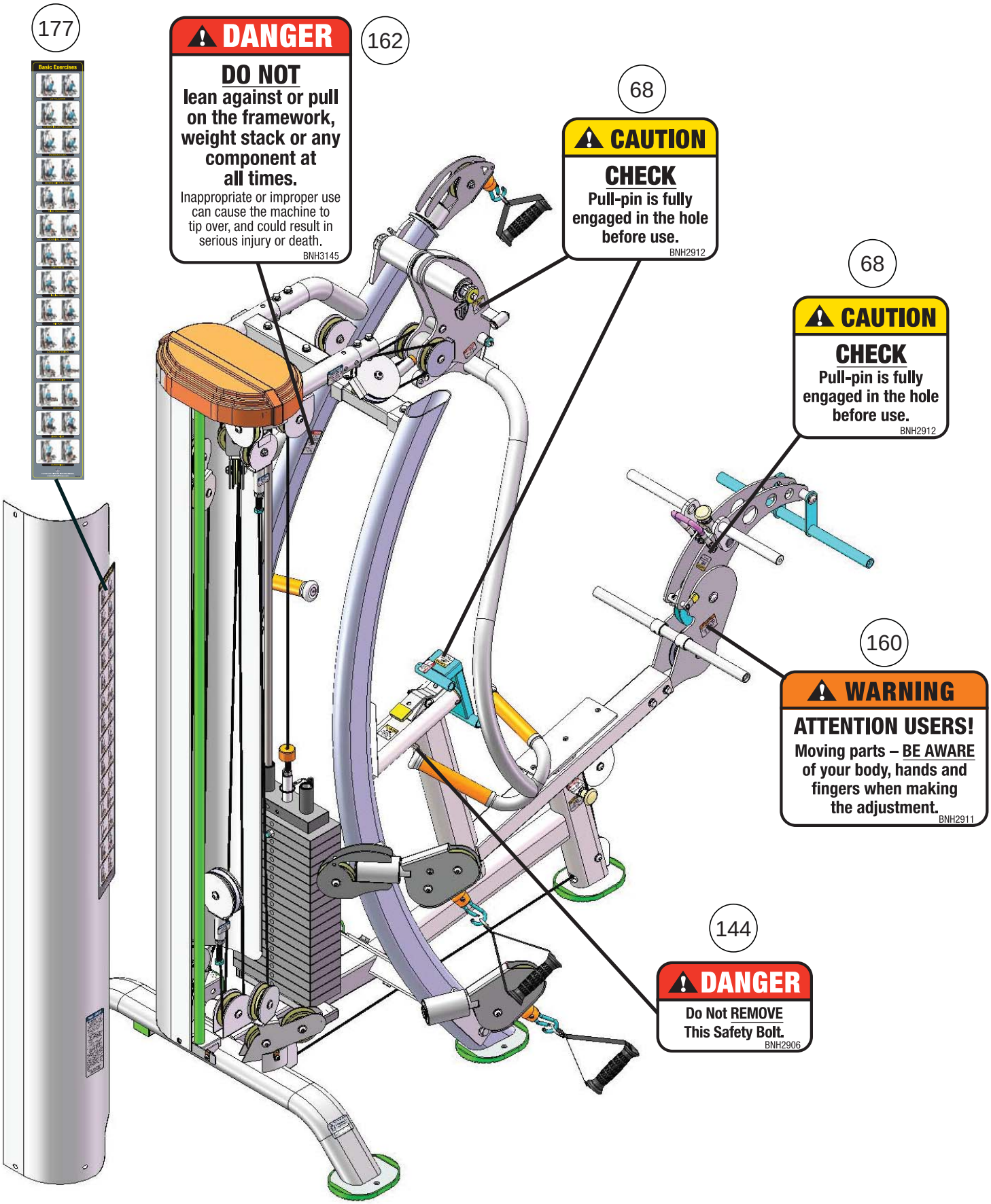

Carefully read ALL Danger, Warning & Caution labels posted on the machine

171

WARRANTY

HOME LIFETIME*

For the **LIFE** of the product while owned by the original purchaser from defects in material and workmanship.

***This warranty does not cover:**

1. TuffStuff products sold for and used in a commercial or institutional environment.
2. Any misuse, neglect, abuse, improper assembly & maintenance, or failure to follow instructions or warnings in the Owner's Manual and warning labels posted on the machines.
3. Use of this apparatus in a manner for which it was not designed.
4. Original product that is altered, or the use of replacement parts and components parts of another manufacturer other than TuffStuff.

All warranty periods begin to run from the date of purchase to the original purchaser. The obligation of TuffStuff under this warranty is limited to repairing or replacing warranted defective parts, as TuffStuff may elect, at TuffStuff's facility in Chino, California, without charge to the Purchaser for either parts or labor. Purchaser is responsible for installation of repaired or replaced parts, and all transportation and insurance costs to and from TuffStuff's facility in Chino. For a detailed copy of the warranty, please contact:

TuffStuff Fitness International
Chino, CA 91710, USA
www.tuffstuffitness.com

BNH3156

170

WARNING

Serious injury or death can occur if these rules are not followed:

Home Use Only

1. **Read and Understand the Owner's Manual,** all danger, warning and caution labels before using this equipment. If you need further assistance, call TuffStuff.
2. **Obtain a medical examination** before beginning any form of exercise program.
3. **Stop exercising** if you feel faint or dizzy. Call for help if you are experiencing pain.
4. **Inspect equipment** prior to use for wear and tear, loose fittings, worn or frayed cables and frame welds. Do not attempt to fix or free any jammed parts yourself. Call your TuffStuff Dealer.
5. **Use this equipment** only for the intended use and for exercises shown in the exercise label.
6. **Keep body, clothing and hair** clear from all moving parts.
7. **Children must not be allowed** near this machine. Teenager must be supervised.
8. **Make sure** the selector pin is fully inserted. Use only the factory selector pin provided.
9. **Do not modify** weight stack with any add-on weights.
10. **Do not remove** any labels on the machine. Replace if damaged.

TuffStuff Fitness International
Chino, CA 91710, USA.

BNH3157

166

INSPECTIONS

Home Use Only Recommended Inspection	DAILY	WEEKLY	MONTHLY	6-MONTH
INSPECT: Links, pull-pins, snap locks, swivels, connectors, selector pin, and welded-joints.	X			
CLEAN: Upholstery with lanolin-base cleaner. Do not use Windex.	X			
INSPECT: Cables and tension (adjust if needed).	X			
INSPECT: All labels		X		
INSPECT: All nuts and bolts (tighten if needed).		X		
INSPECT: Accessory bars, handles, rubber grips.		X		
INSPECT: All anti-skid surfaces.		X		
CLEAN & LUBRICATE: Clean guide rods with Super Lube® spray lubricant and lubricate with Super Lube® (PTFE) grease.			X	
LUBRICATE: Seat sleeves, pull-pin sliding mechanism, bushings and linear bearings.			X	
CLEAN & WAX: All powder-coat finishes.				X

Use only genuine TuffStuff replacement parts. Failure to do so will void warranty and could result in serious injury or death.

TuffStuff Fitness International
Chino, CA 91710, USA
www.tuffstuffitness.com

BNH3155

177

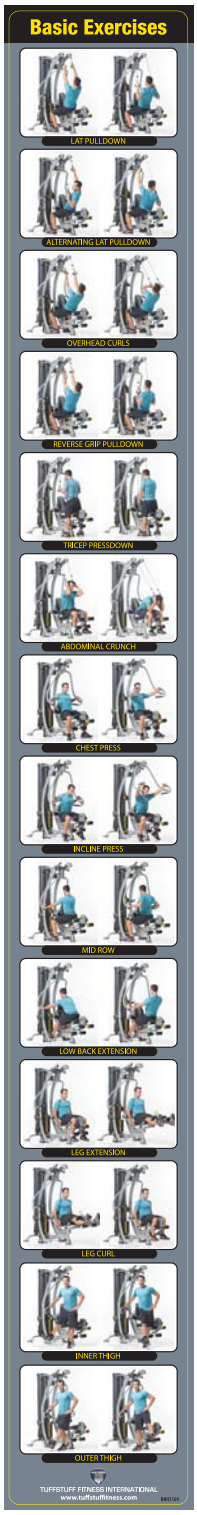

178

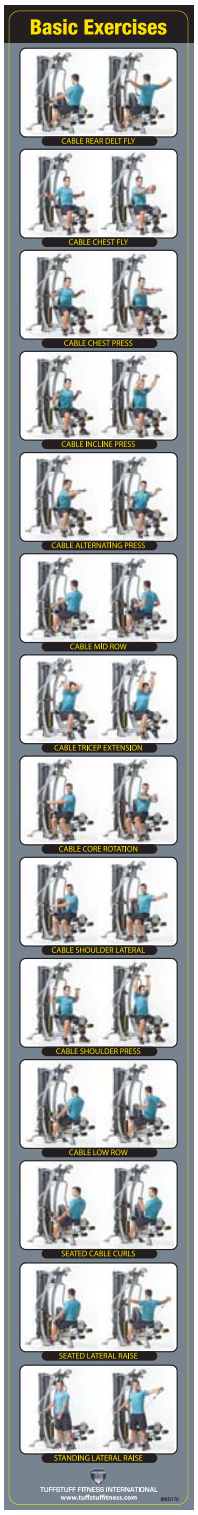

153

IMPORTANT

CHECK CABLES
Be sure cables run between the pulleys and working properly.

BNH3113

164

IMPORTANT

ADJUST
Cable Tension Here

BNH2924

159

IMPORTANT

For smooth performance, lubricate all gliding surfaces with silicone spray lubricant.

BNH2916

165

IMPORTANT

For smooth performance, clean guide rods with Super Lube® spray lubricant and lubricate with Super Lube® (PTFE) grease.

BNH2925

162

DANGER

DO NOT
lean against or pull on the framework, weight stack or any component at all times.

Inappropriate or improper use can cause the machine to tip over, and could result in serious injury or death.

BNH3145

163

DANGER

Use this equipment ONLY for its intended purpose.

If you are unfamiliar with the equipment or procedure, refer to your Owner's Manual or call TuffStuff at 888-884-8275.

Failure to comply could result in serious injury or death.

BNH2903

95

DANGER

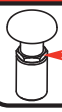

TIGHTEN this retaining nut before use.

BNH3146

144

DANGER

Do Not REMOVE This Safety Bolt.

BNH2906

Carefully read ALL Danger, Warning & Caution labels posted on the machine

168

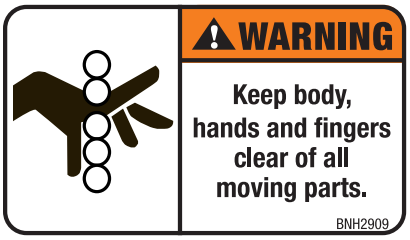

160

169

167

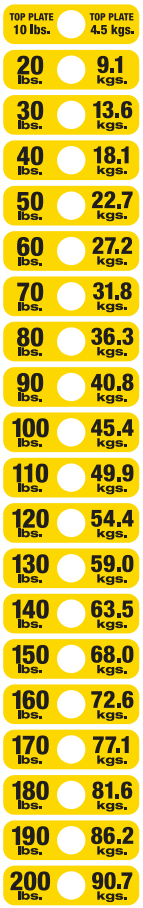

68

149

161

59

It is extremely important that the **BE ALERT! Sign** shown to the left be installed in plain view of the unit.

You should have received it along with this Owner's Manual. If you did not receive this Sign with your order, you can obtain one at no cost to you from TuffStuff Fitness by contacting our service department at:

1 (888) 884-8275
service@tuffstuff.net
service1@tuffstuff.net

Important Safety Instructions

⚠DANGER

DO NOT pull or perform any exercises to the sides or to the back of the machine. Excessive pulling or force can cause the machine to tip over, and may result in serious injuries or death

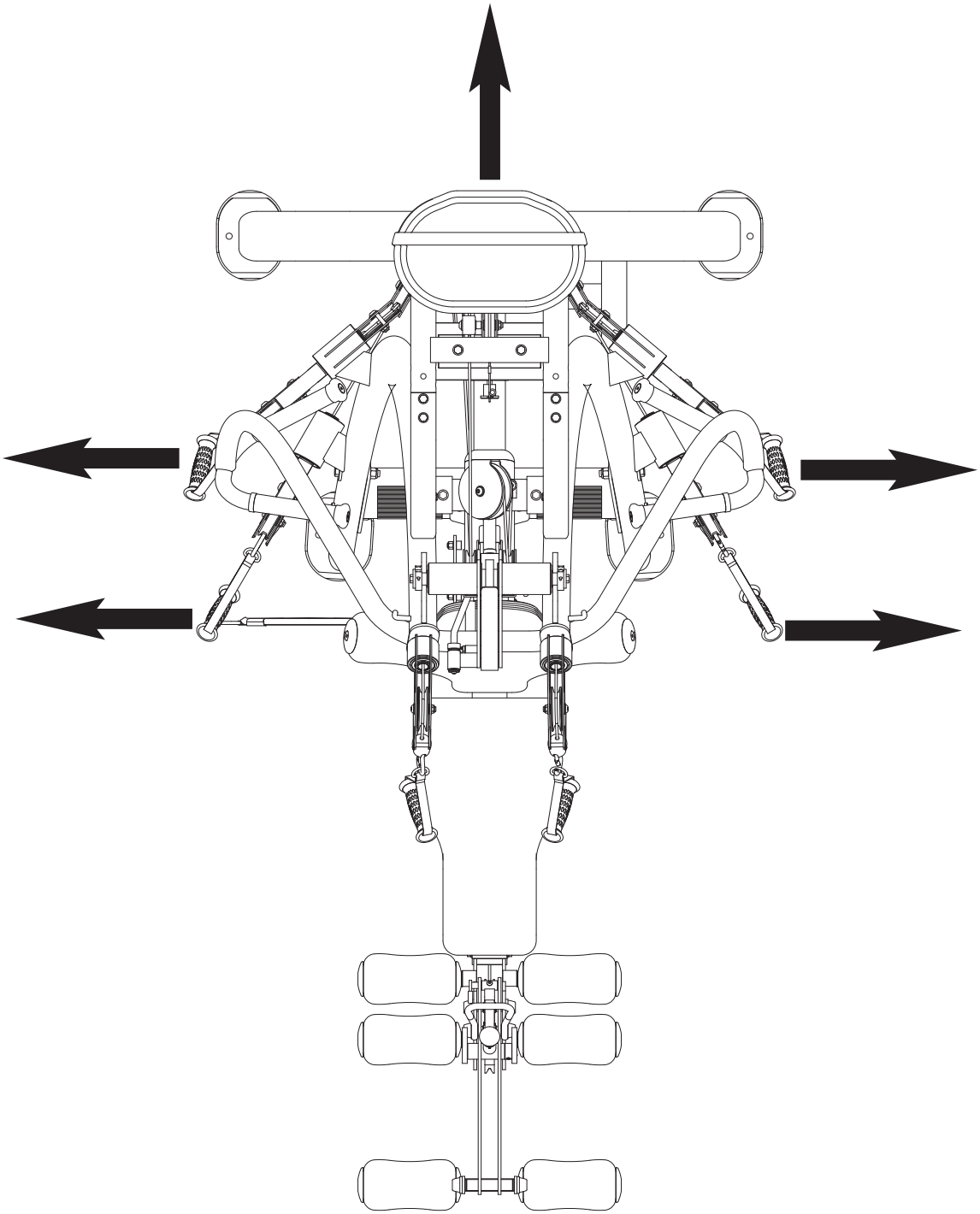

Important Safety Instructions

If you have not participated in a regular exercise program, smoke or have signs of high blood pressure, you must obtain a medical exam or consult with your personal physician before performing any SXT-550 exercises illustrated in this manual.

⚠ WARNING SERIOUS INJURY OR DEATH CAN OCCUR IF THESE SAFETY PRECAUTIONS ARE NOT OBSERVED:

1. **Read and understand Owner's Manual** and all Danger, Warning and Caution labels before using this equipment. If you still need help, call TuffStuff Fitness International.
2. Inspect the equipment before each use for wear and tear, loose fittings, worn or frayed cables and frame welds. DO NOT USE if it appears to be inoperable or damaged.
3. Stop exercising if you feel faint or dizzy. Call your doctor immediately if you are experiencing pain.
4. Use this equipment only for the intended use and for exercise(s) shown on pages 54-58.
5. Keep body, clothing and hair clear from all moving parts. Do not attempt to free any jammed parts by yourself.
6. Do not lean against or pull on the framework, weight stack or any component, whether the machine is in use or at rest.
7. Do not use accessories or accessory attachments that are not recommended by TuffStuff.
8. Children must not be allowed near the equipment. Teenager must be supervised.
9. Make sure selector pin is completely inserted and never pin the weights in an elevated position. Use only the selector pin provided by the manufacturer.
10. Do not remove any decals affixed to the machine. Replace if damaged.
11. Do not alter or modify the original manufacturer's 200 lbs. weight stack with any add-on incremental weights, weight plates or dumbbells except those with standard factory installed option.
12. Perform regular maintenance (see INSPECTION Label). Pay special attention to areas most susceptible to wear and tear, including but not limited to cables, pulleys and rubber grips.
13. Replace immediately all parts at first sign of wear or damage. Use only genuine TuffStuff replacement parts. Failure to do so will void warranty and could result in serious injury or death to you.

Training Safety

1. Always warm-up before and cool-down after weight training. Warm-up for 10-15 minutes with stretching and cardiovascular exercises. Cool-down should include light stretching exercises for 5-15 minutes.
2. Never hold your breath – will limit the flow of oxygen to your brain and may cause dizziness. The most often used breathing pattern is inhaling during least resistance and exhaling during maximum resistance.
3. Always choose a light resistance when using the machine the first time.
4. Trained at a controlled rate of speed

⚠ DANGER

DANGER: indicates an imminently hazardous situation which, if not avoided, will result in death or serious injury.

⚠ WARNING

WARNING: indicates a potentially hazardous situation which, if not avoided, will result in death or serious injury.

⚠ CAUTION

CAUTION: indicates a hazardous situation which, if not avoided, could result in minor or moderate injury.

Registration, Service & Assembly

Thank you for purchasing the SXT-550 Deluxe Hybrid Trainer. This machine is part of the TuffStuff line of quality strength training equipment. To maximize your use of the equipment, please study the Owner's Manual thoroughly.

Registration

To avoid unnecessary delays on warranty parts and to insure that a permanent record of your purchase is on file with our company, be sure to register online at http://www.tuffstuffitness.com or mail to address shown below within 10 days of purchase.

Obtaining Service

Please use this Owner's Manual as your guide to all parts included in your shipment. When ordering parts, you must specify the part number and description from this owner's manual. **Use only genuine TuffStuff replacement parts when servicing the equipment.** Failure to do so will void warranty and could result in serious injury or death.

For information about product operation or service:

Phone:	909-629-1600 Toll Free 888-884-8275
Fax:	909-629-4967
E-mail:	service@tuffstuff.net or service1@tuffstuff.net
Hours:	M–F 8:00 – 4:30 PST
Or write to:	TuffStuff Fitness International Inc. Customer Service 13971 Norton Avenue, Chino, CA 91710

Retain this Owner's Manual for future reference when ordering service or parts. To assist you better, please be prepared to provide the following information:

1. Model Number **2. Place of Purchase**
3. Serial Number **4. Part # and Description**

Required Tools

The basic tools that you will need to assemble the SXT-550 but are not limited to:

- 9/16", 3/4", 1/2" combination wrenches
- Adjustable wrench
- Ratchet wrench with 9/16", 3/4", 1/2" sockets
- External retaining ring pliers
- Rubber mallet, measuring tape & utility knife
- Super Lube® spray lubricant and grease
- Windex or household glass cleaner

Assembly Requirements

Follow these installation requirements when assembling the SXT-550. Use the overhead view on the Content Page to layout your floor plan before assembling.

Set up the SXT-550 on a clean, solid, flat surface. A smooth, flat surface under the machine helps keep it level.

Allow ample space around the machine for safe unrestricted use and easier access.

Insert all bolts in the same direction. For aesthetic appearance, insert all bolts in the same direction unless specified (in text or illustration) to do otherwise.

Leave room for adjustments. Do not fully tighten fasteners until instructed in the assembly steps to do so (to prevent any difficulty with alignment of parts during the assembly process). When not instructed, tighten fasteners such as bolts, nuts and screws so the unit is stable, but leave room for adjustments.

Assembly Tips

Read all "Notes" on each page before beginning each step.

While you may be able to assemble the SXT-550 using the illustrations only, IMPORTANT safety notes and other tips are included in the text.

Some pieces may have extra holes that you will not use. Use only those holes indicated in the instructions and illustration.

NOTE: With so many assembled parts, proper alignment and adjustment is critical. While tightening the nuts and bolts, be sure to leave room for final adjustments.

CAUTION: Obtain assistance from TFI if you have difficulty assembling the SXT-550. Please do not attempt to complete the assembly as this could result in equipment failure and serious injuries to the users.

Symbols & Description

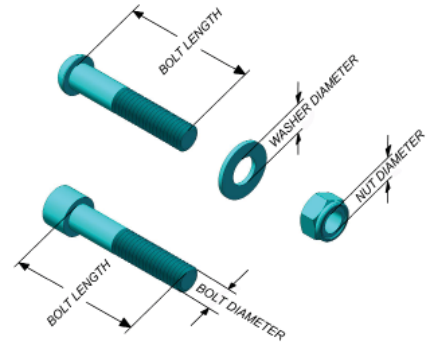

70%

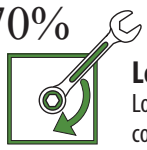

Loosely Fasten
Loosely tighten all hardware in this step. DO NOT fully tighten. Some component(s) may need pre-assembly and or alignment during the assembly process.

100%

Fully Fasten
Wrench tighten all hardware in this step.

Inspection/Maintenance

Perform regular maintenance (see Inspection Label). Pay special attention to areas most susceptible to wear and tear, including but not limited to cables, pulleys and rubber grip. TFI recommends you maintain a service contract with a TFI Authorized Dealer or a Professional Service Company approved by TFI. Keep a service log of all maintenance and repair activities. Extra copies can be downloaded from our website www.tuffstuffitness.com

INSPECTIONS

Home Use Only Recommended Inspection	DAILY	WEEKLY	MONTHLY	6-MONTH
INSPECT: Links, pull-pins, snap locks, swivels, connectors, selector pin, and welded-joints.	X			
CLEAN: Upholstery with lanolin-base cleaner. Do not use Windex.	X			
INSPECT: Cables and tension (adjust if needed).	X			
INSPECT: All labels		X		
INSPECT: All nuts and bolts (tighten if needed).		X		
INSPECT: Accessory bars, handles, rubber grips.		X		
INSPECT: All anti-skid surfaces.		X		
CLEAN & LUBRICATE: Clean guide rods with Super Lube® spray lubricant and lubricate with Super Lube® (PTFE) grease.			X	
LUBRICATE: Seat sleeves, pull-pin sliding mechanism, bushings and linear bearings.			X	
CLEAN & WAX: All powder-coat finishes.				X

Use only genuine TuffStuff replacement parts. Failure to do so will void warranty and could result in serious injury or death.

TuffStuff Fitness International
Chino, CA 91710, USA
www.tuffstuffitness.com

BNH3155

INSPECTION / MAINTENANCE RECORDS

DATE	REPLACEMENT	REPAIRS	INSPECTED BY

WARRANTY REPAIRS

DATE	REPLACEMENT	REPAIRS	INSPECTED BY

Cable Inspection

WARNING:

THE FOLLOWING CONDITIONS MAY INDICATE A WORN CABLE. REPLACE IMMEDIATELY.

"NECKING", STRETCHED CABLE COVERING

A CRACK IN THE CABLE COVER

A TEAR IN THE CABLE COVER

A BREAK ON THE CABLE

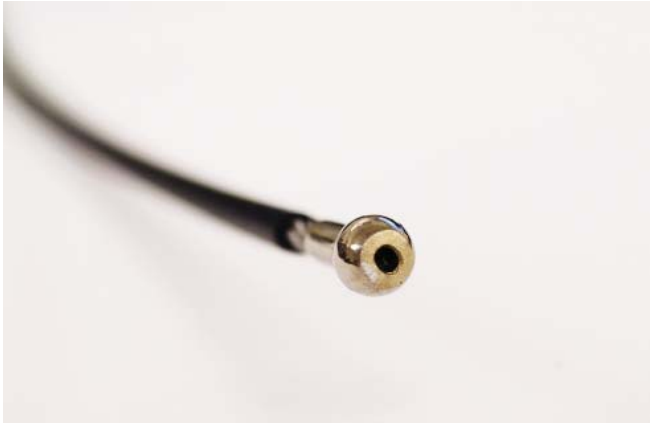

CABLE END SLIPPING OUT

IMPORTANT NOTE:

DAMAGED OR WORN CABLE (AS SHOWN ABOVE) MAY DAMAGE THE PULLEY(S). YOU MUST INSPECT THE PULLEYS AT THIS TIME FOR WEAR AND TEAR. REPLACE IF NEEDED.

Step 1

Note:

1. It is strongly recommended that two people participate in the assembly of this unit.

Step 1 Assembly List

Item #	Description	Qty.
*9	TOP CROSS BRACE	1
*25	SIDE FRAME LT	1
*36	REAR STABILIZER	1
*50	SIDE FRAME RT	1
84	FLAT WASHER SAE Z/P 1/2”	8
85	FLAT WASHER SAE Z/P 3/8”	4
90	NYLON INSERT LOCK NUT Z/P 1/2-13	4
146	HEX HEAD CAP SCREW GR-5 Z/P 3/8-16 X 2 1/2	2
150	HEX HEAD CAP SCREW GR-5 Z/P 1/2-13 X 3 1/4	4
173	NYLON INSERT LOCK NUT Z/P 3/8-16	2

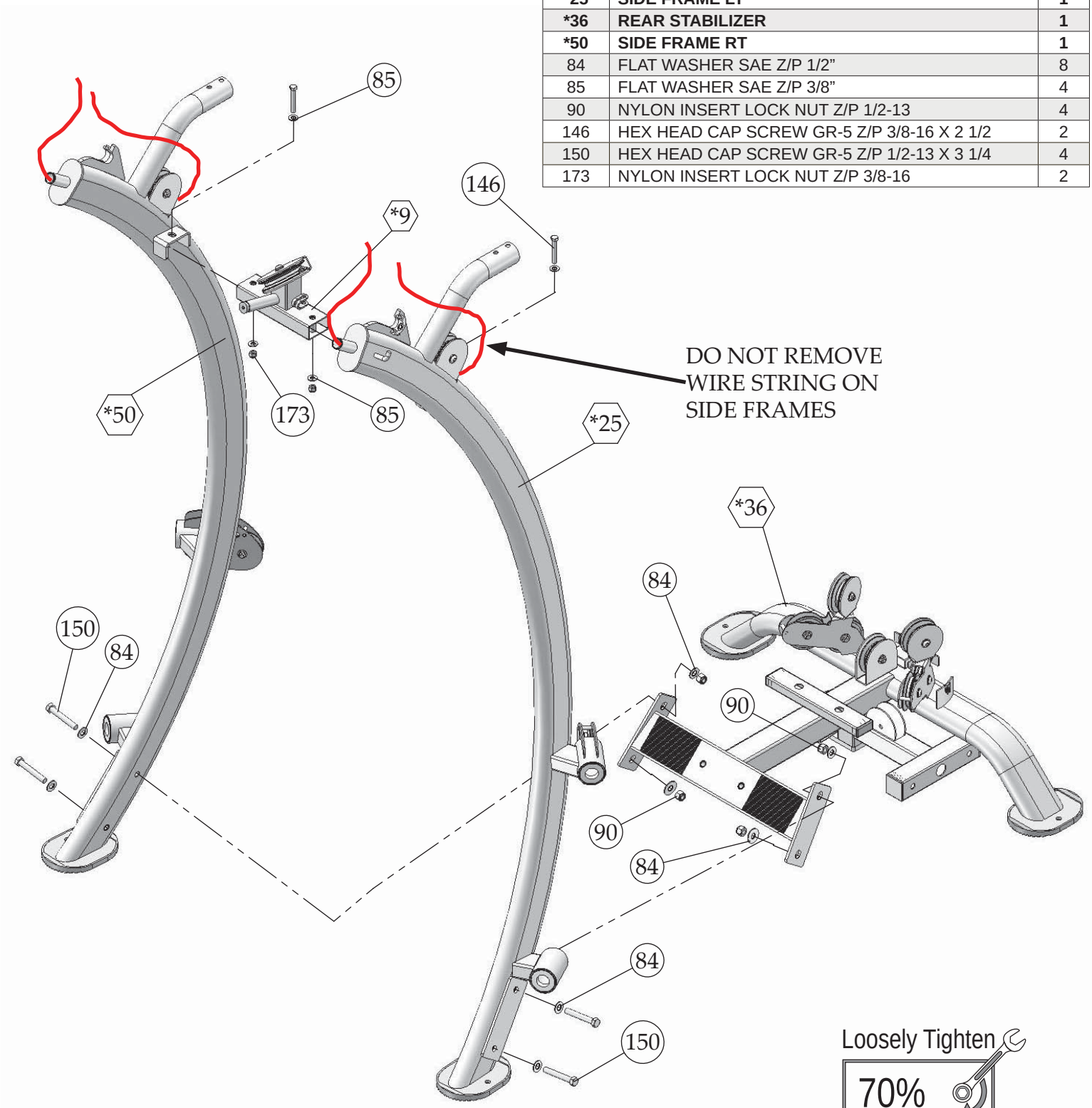

Loosely Tighten

70%

Loosely Tighten

Loosely tighten all hardware in this step.

Step 2

Note:
Run wire thru brackets as shown below and secure it (**do not remove wire**).

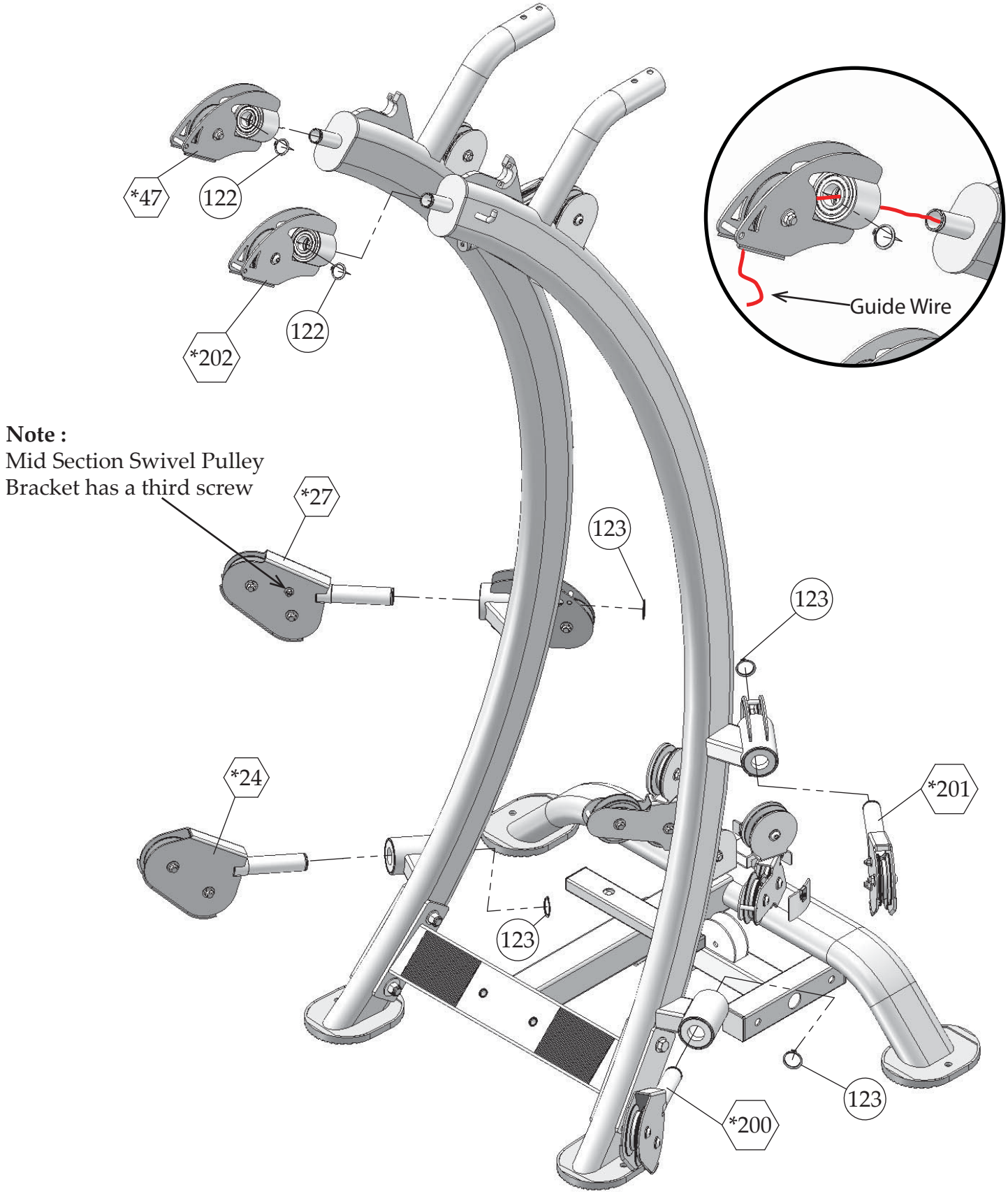

Step 2 Assembly List

Item #	Description	Qty.
***24**	**LOW SECTION SWIVEL PULLEY BRACKET RT**	**1**
***27**	**MID SECTION SWIVEL PULLEY BRACKET RT**	**1**
***47**	**TOP SWIVEL PULLEY BRACKET RT**	**1**
122	RETAINING SNAP RING EXT. PLAIN .925 X 1 X .042	2
123	RETAINING SNAP RING EXT. PLAIN 1 1/4”	4
***200**	**LOW SECTION SWIVEL PULLEY BRACKET LT**	**1**
***201**	**MID SECTION SWIVEL PULLEY BRACKET LT**	**1**
***202**	**TOP SWIVEL PULLEY BRACKET LT**	**1**

Step 3

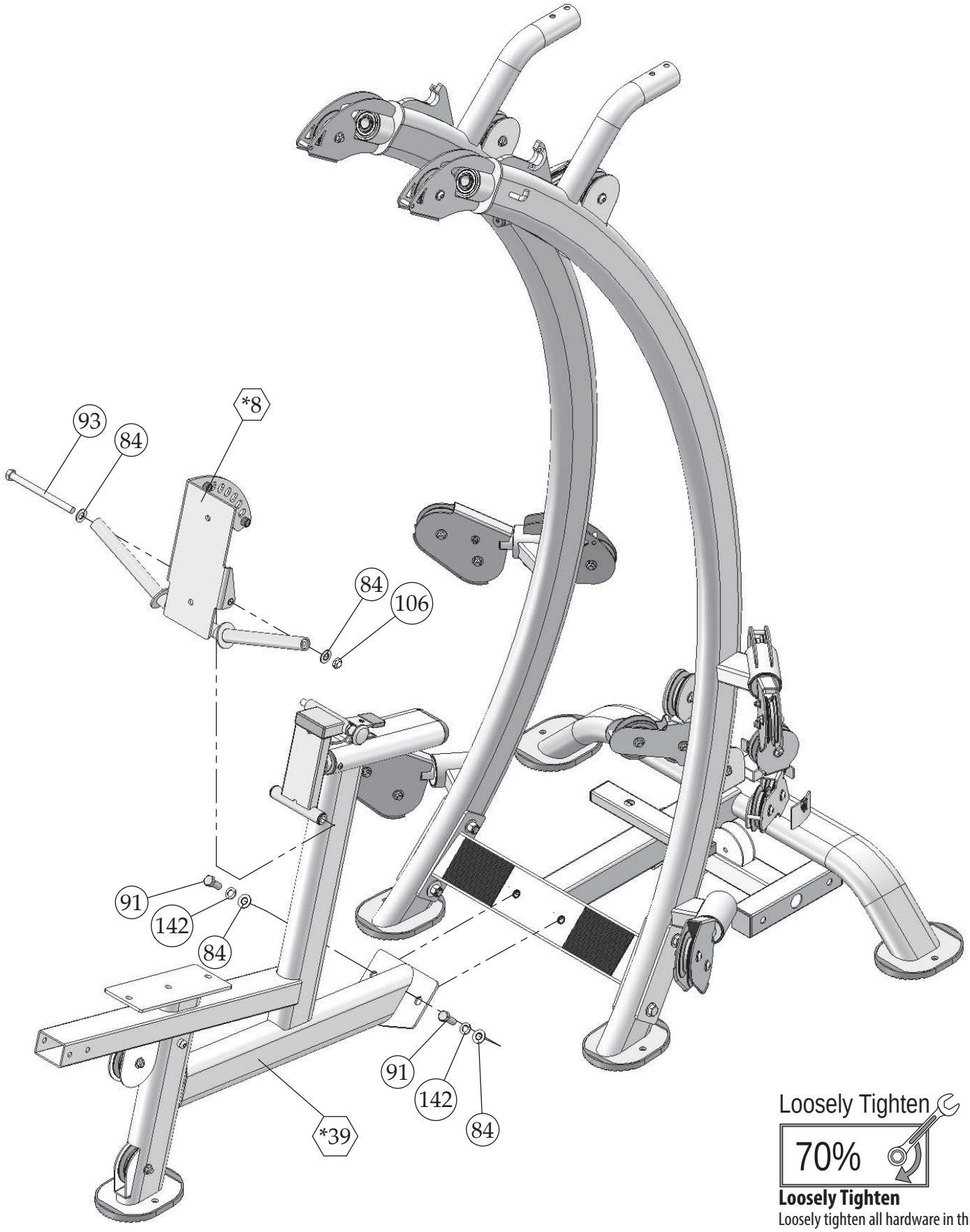

Loosely Tighten

70%

Loosely Tighten

Loosely tighten all hardware in this step.

Step 3 Assembly List

Item #	Description	Qty.
***8**	**BACK PAD BRACKET**	**1**
***39**	**SEAT FRAME**	**1**
84	FLAT WASHER SAE Z/P 1/2”	4
91	HEX HEAD CAP SCREW GR-5 Z/P 1/2-13 X 1 1/4	2
93	HEX HEAD CAP SCREW GR-5 Z/P 1/2-13 X 6 1/4	1
106	NYLON INSERT THIN PATTERN LOCK NUT Z/P 1/2-13	1
142	SPLIT LOCK WASHER Z/P 1/2”	2

Step 4

Step 4 Assembly List		
Item #	**Description**	**Qty.**
14	**GUIDE ROD 3/4 X 72**	**2**
42	**SELECTOR PIN**	**1**
85	FLAT WASHER SAE Z/P 3/8”	2
94	HEX HEAD CAP SCREW GR-5 Z/P 3/8-16 X 1	2
107	NYLON INSERT THIN PATTERN LOCK NUT Z/P 3/8-16	1
125	RUBBER DONUT 3/4 X 2 1/2	2
134	SPLIT LOCK WASHER Z/P 3/8”	2
141	10 LB STEEL WEIGHT PLATE BLACK 4 9/16 X 9 7/16	19
151	10 LB TOP PLATE W/ADJ SLTR BAR	1
167	LABEL-NUMBERS 10-200 LBS/KGS 7/8 X 3...	1
180	BUTTON HEAD SOCKET CAP SCREW GR-5 Z/P 3/8-16 X 4 5/8	1

Note:

1. Once assembled, lean weights forward to easily assemble Step 5

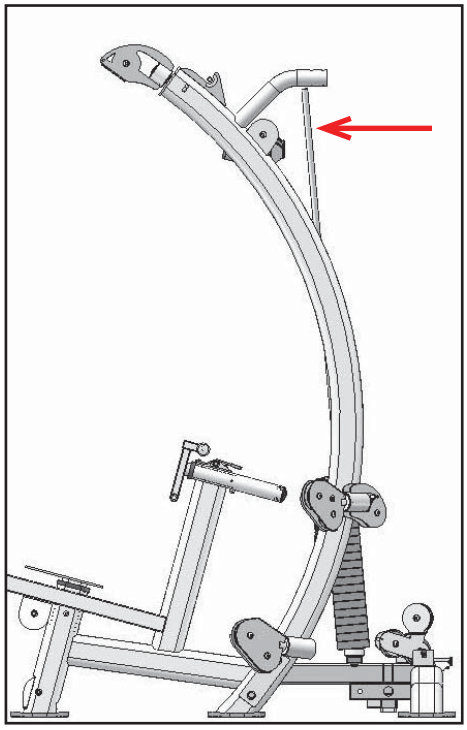

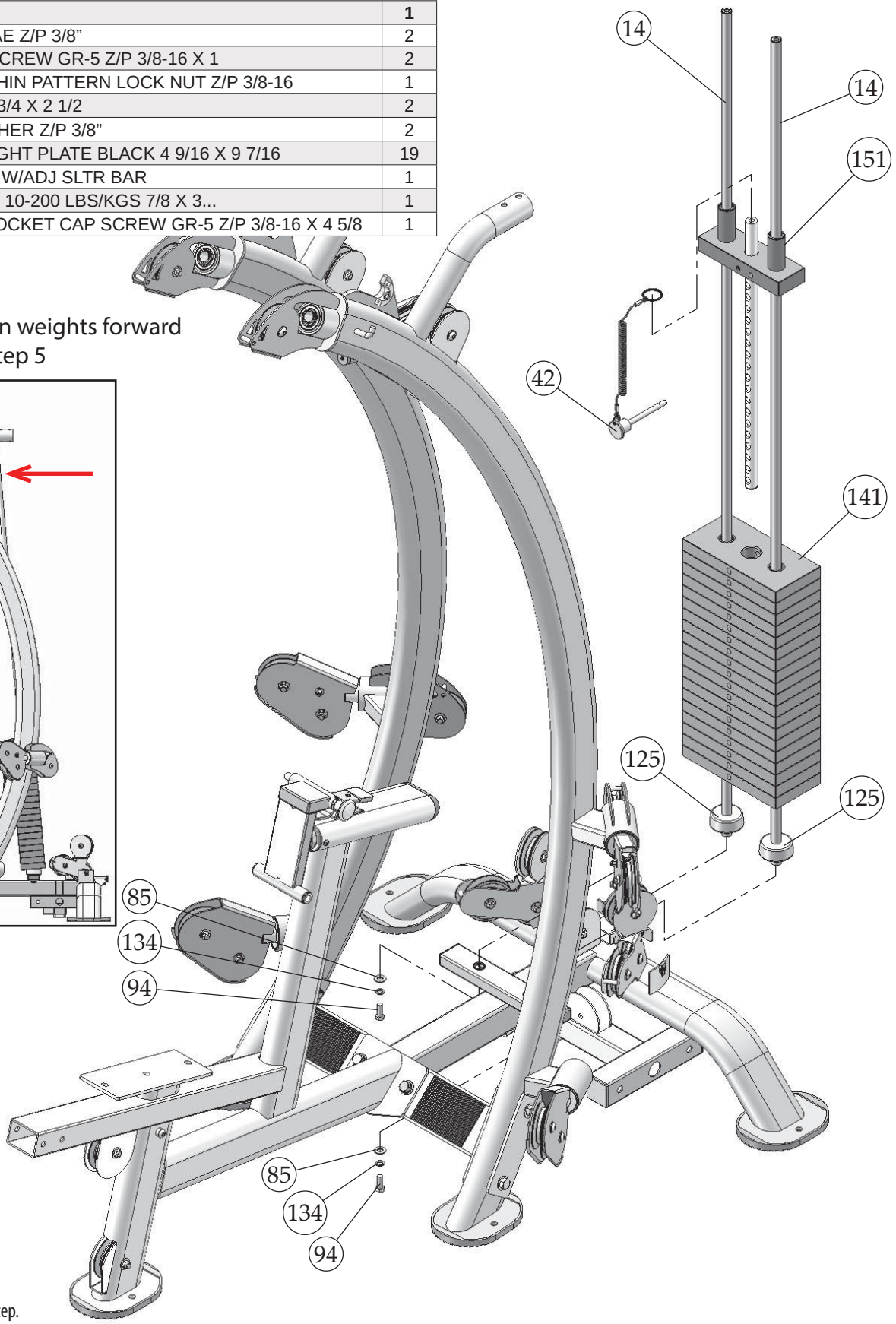

Loosely Tighten

70%

Loosely Tighten

Loosely tighten all hardware in this step.

Note:

1. Top plate label goes on hole off center as shown. Label will cover hole on center.

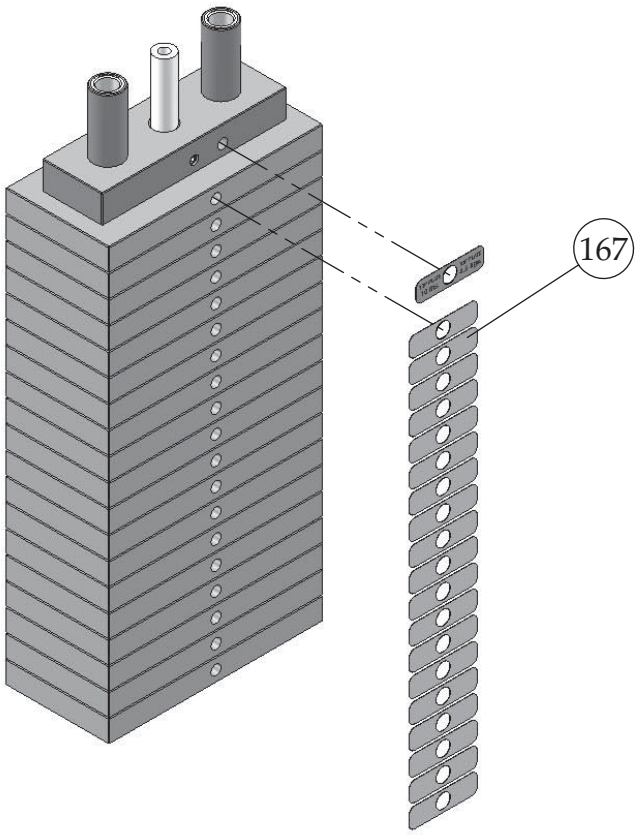

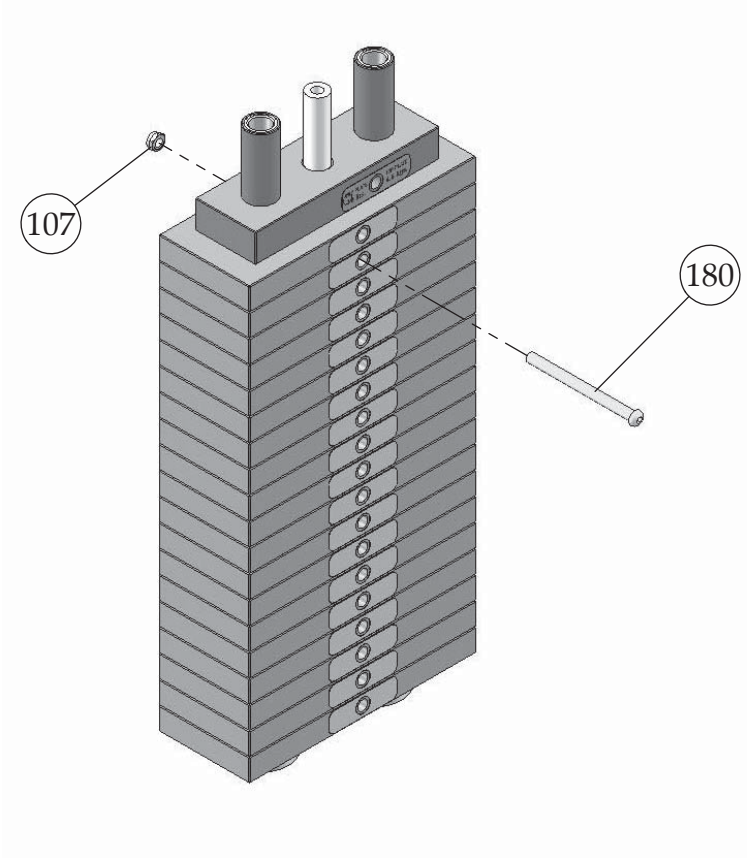

Weight stack label and lubrication instructions

1. Wipe front surface of weight stack with rubbing alcohol and wipe dry.
2. Peel off back sheet (adhesive side) from label (#167) and make sure that the label remains attached to the application tape.
3. Line up left edge of label sheet with outside edge of weight holes.
4. Line up the first label to hole on top plate.
5. Make sure label is straight and slowly press into place.
6. Gently remove application tape and rub each label firmly against the weight stack.
7. Allow labels to stand for 2 days to allow adhesive to cure fully.
8. Open the lube package provided and apply a thin film of lubricant around the first 3 inches of the guide rods above the top plate.
9. After the cables are installed, do a set of reps to spread the lubricant thoroughly.
10. Secure second weight plate with hardware shown above.

Step 5

Step 5 Assembly List		
Item #	**Description**	**Qty.**
37	**REAR SUPPORT SHAFT**	**1**
***46**	**TOP ASSEMBLY**	**1**
85	FLAT WASHER SAE Z/P 3/8”	4
94	HEX HEAD CAP SCREW GR-5 Z/P 3/8-16 X 1	9
103	HEX HEAD CAP SCREW GR-5 Z/P 3/8-16 X 1 3/4	1
134	SPLIT LOCK WASHER Z/P 3/8”	12
145	HEX HEAD CAP SCREW GR-5 Z/P 3/8-16 X 2 3/4	2
147	OVAL WASHER Z/P 3/8”	8

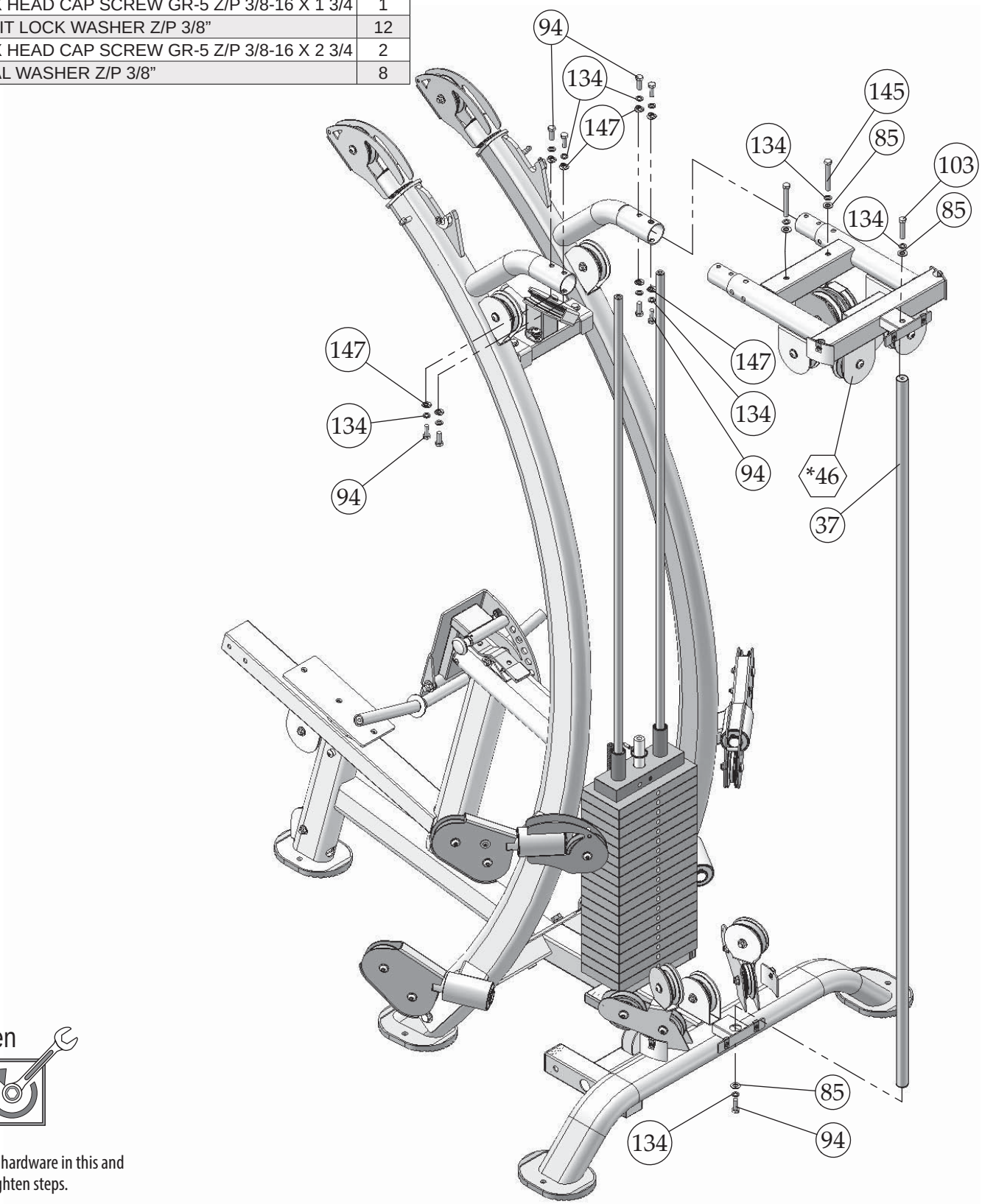

Fully Tighten

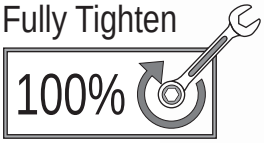

Fully Tighten
Wrench tighten all hardware in this and previous loosely tighten steps.

Step 6

Step 6 Assembly List		
Item #	**Description**	**Qty.**
***29**	**PRESS BAR**	**1**
77	SUPPORT WASHER Z/P 3/8 ID X 1 1/2 OD X 3/16	2
94	HEX HEAD CAP SCREW GR-5 Z/P 3/8-16 X 1	2
130	SOCKET CAP SCREW Z/P 1/4-28 X 3/4	4
133	SPLIT COLLAR B/O 1”	2
134	SPLIT LOCK WASHER Z/P 3/8”	2

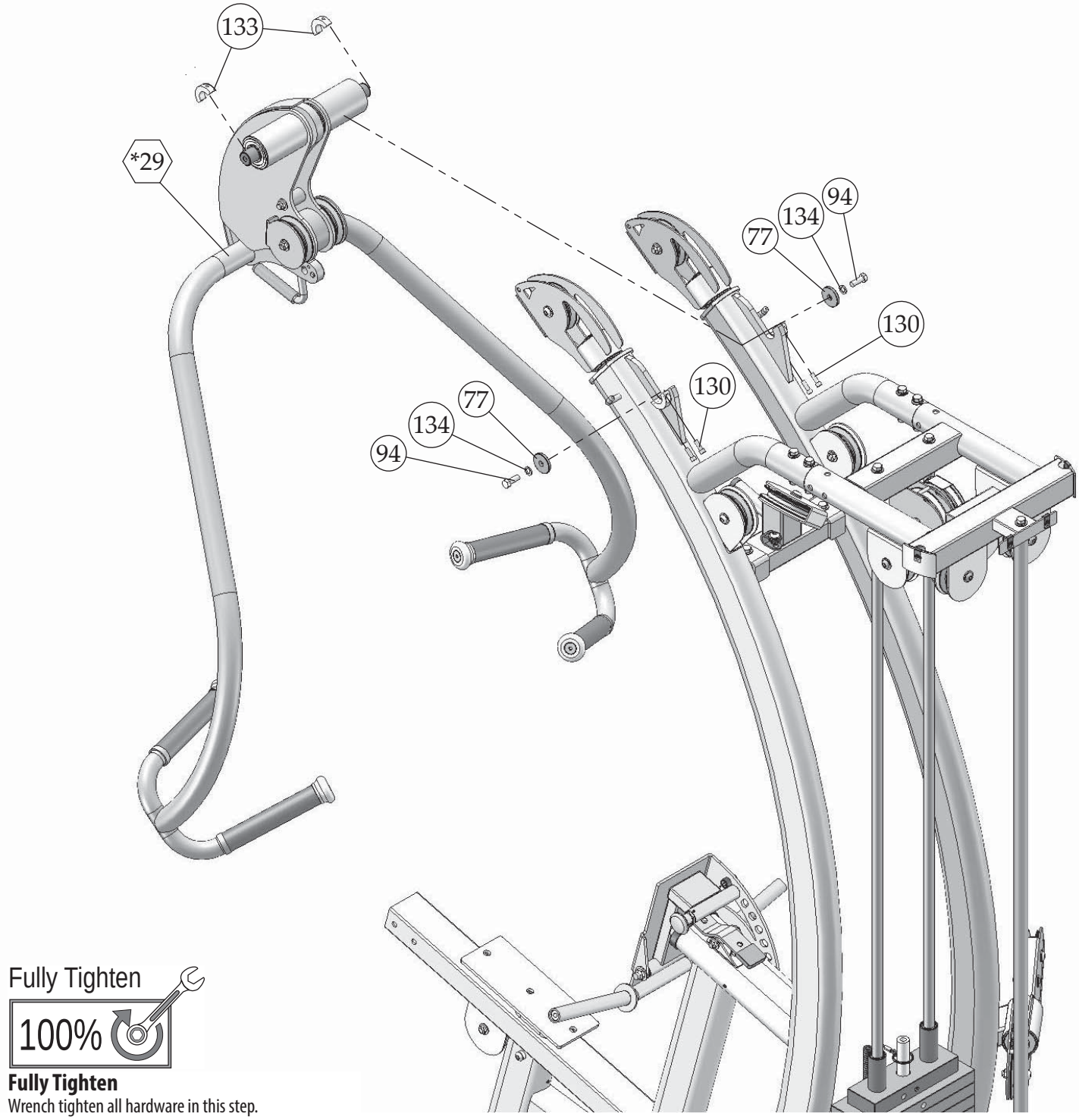

Fully Tighten
Wrench tighten all hardware in this step.

Step 7

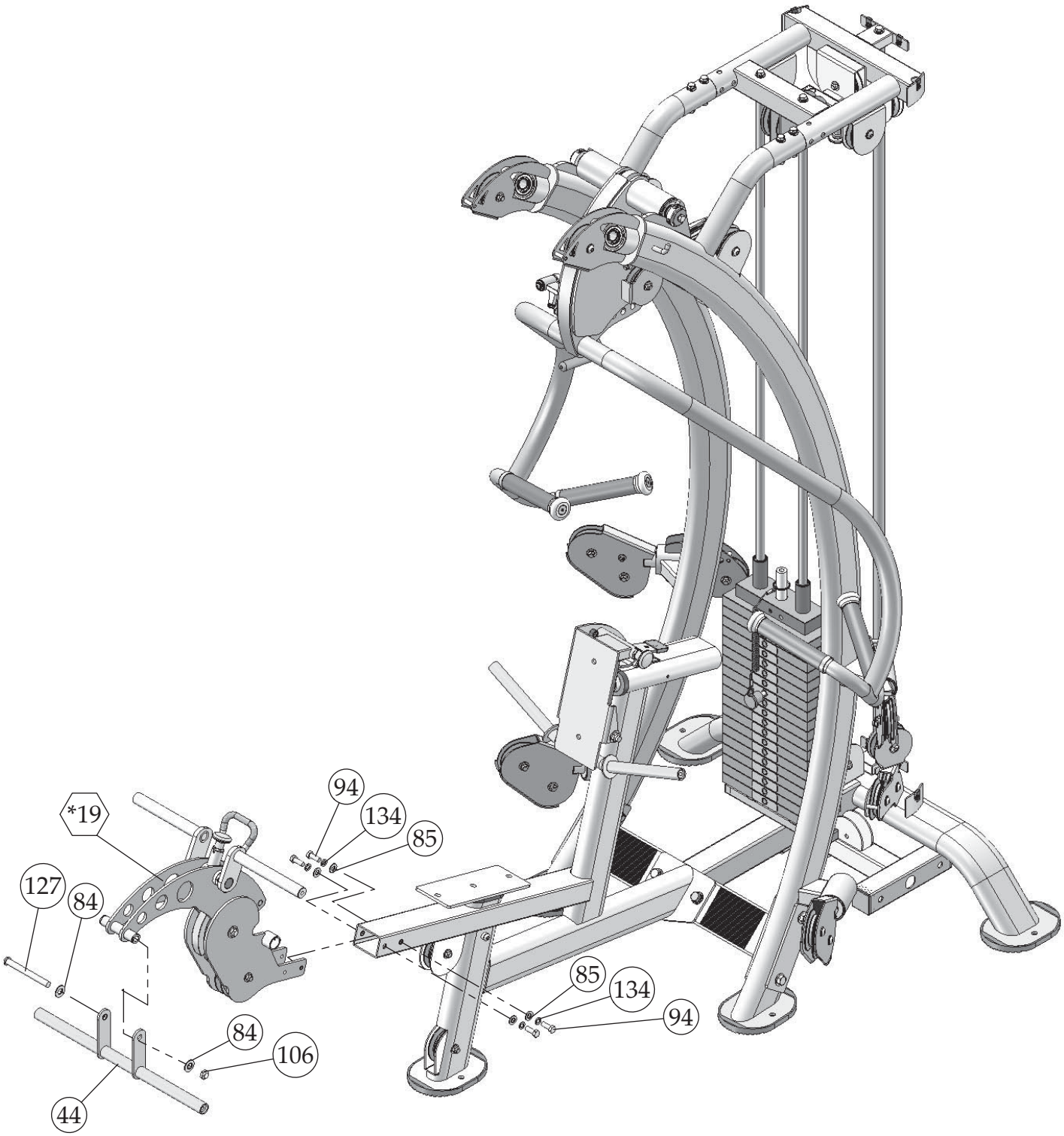

Fully Tighten

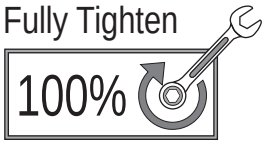

Fully Tighten

Wrench tighten all hardware in this step.

Step 7 Assembly List

Item #	Description	Qty.
***19**	**LEG EXT/CURL PIVOT ARM**	**1**
44	**SWIVEL FOOT ROLL TUBE**	**1**
84	FLAT WASHER SAE Z/P 1/2”	2
85	FLAT WASHER SAE Z/P 3/8”	4
94	HEX HEAD CAP SCREW GR-5 Z/P 3/8-16 X 1	4
106	NYLON INSERT THIN PATTERN LOCK NUT Z/P 1/2-13	1
127	HEX HEAD CAP SCREW GR-5 Z/P 1/2-13 X 4 3/4	1
134	SPLIT LOCK WASHER Z/P 3/8”	4

Step 8 Lat Cable

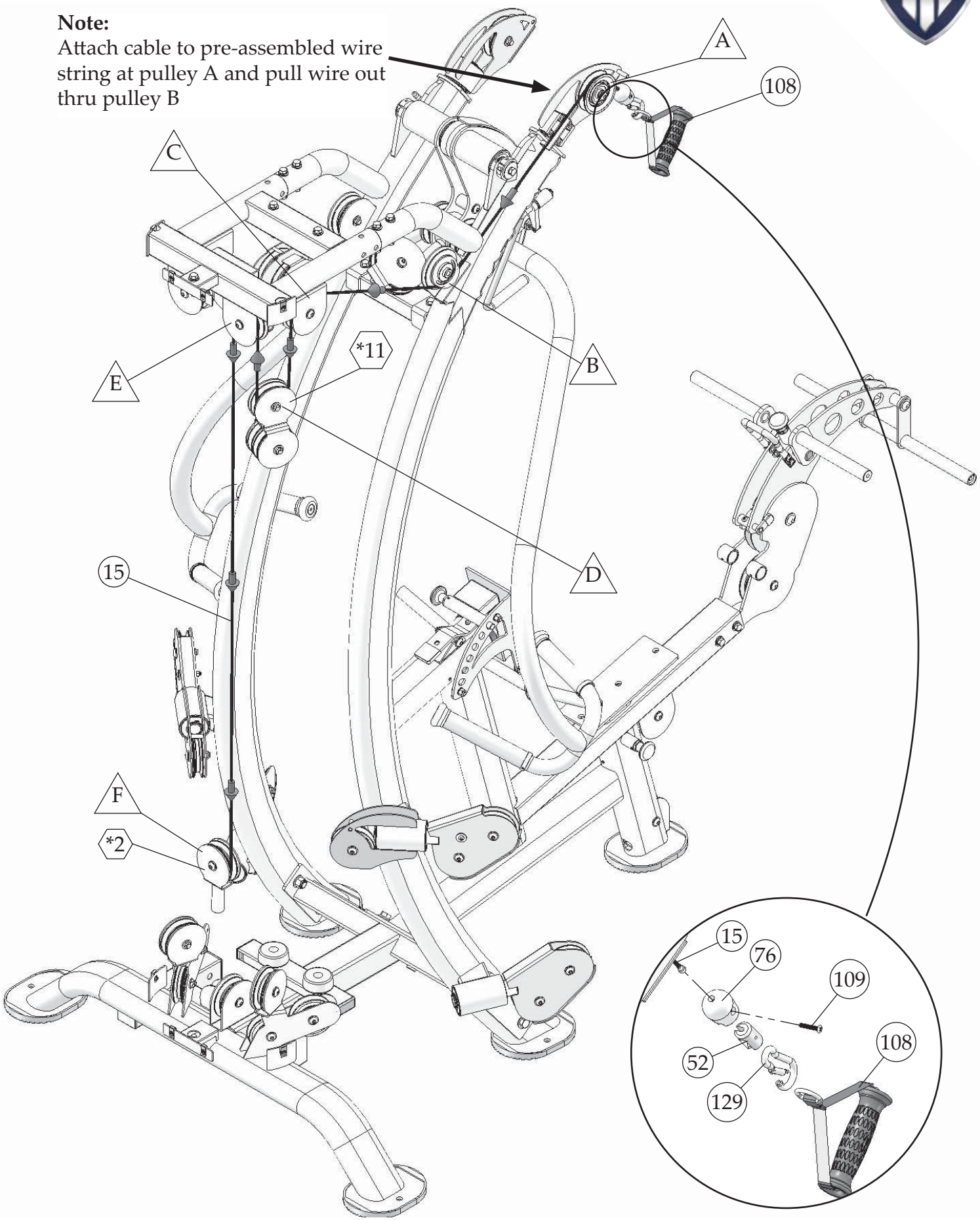

Step 8 Assembly List

Item #	Description	Qty.
***2**	**ADJUSTABLE FLOATING 3 1/2 PULLEY BRACKET OPEN TOP**	**1**
***11**	**FLOATING TRIPLE PULLEY BRACKET**	**1**
15	**LAT CABLE (3/16" CABLE)**	**1**
52	7/8 RD X 1 5/8 LINK 3/16 CABLE	1
76	CABLE STOPPER SHELL 1 1/2 X 1 3/4	1
108	NYLON SHORT HANDLE	1
109	OVAL HEAD PHILLIPS MACHINE SCREW Z/P #10-32 X 1 1/8	1
129	SNAP LINK Z/P 8MM X 80MM	1

Note:

1. Some parts not shown/cut out for clarity.

Step 8 Lat Cable Continued

CONTINUED FROM PREVIOUS PAGE ON PULLEY "F"

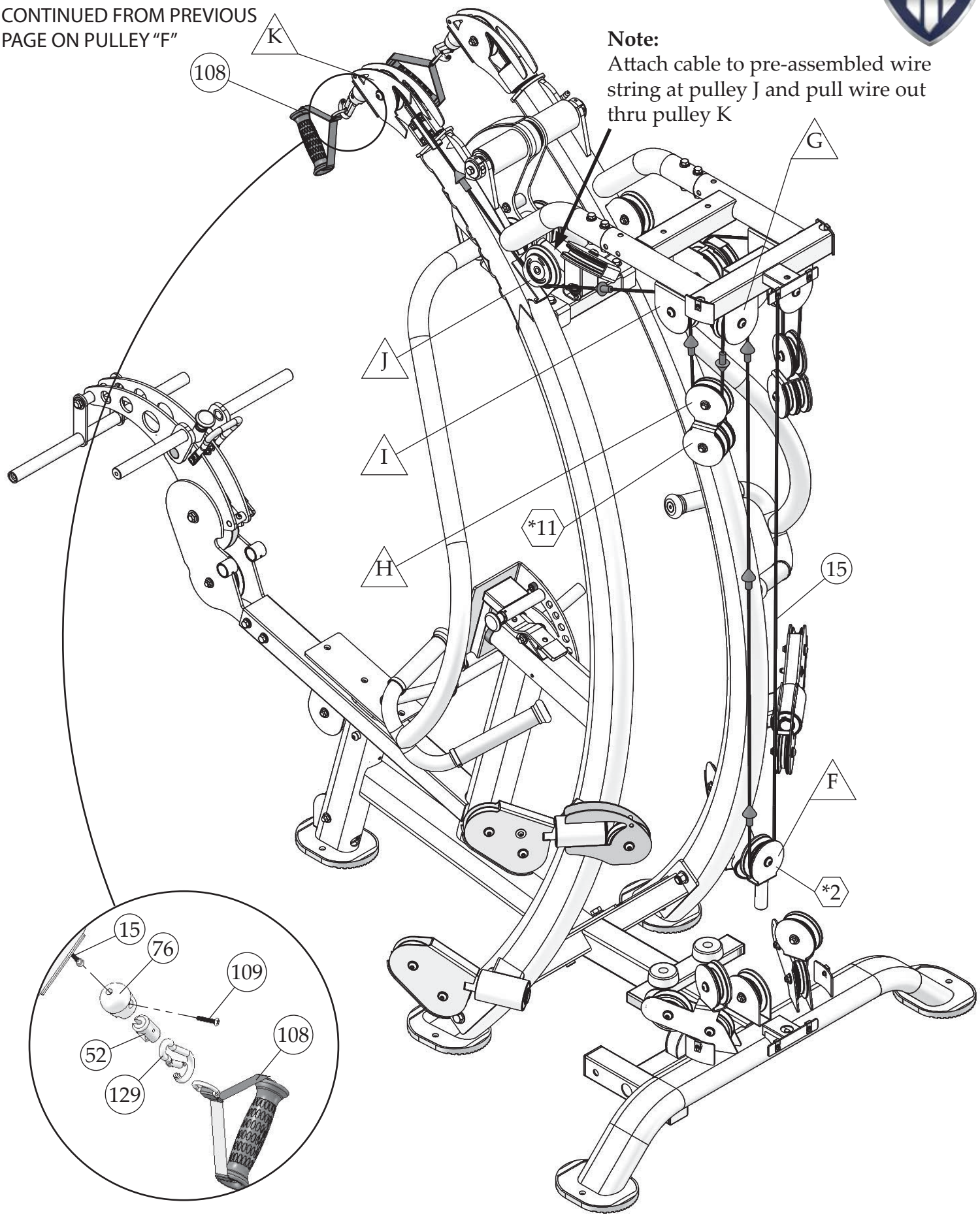

Note:
Attach cable to pre-assembled wire string at pulley J and pull wire out thru pulley K

Step 8 Assembly List

Item #	Description	Qty.
***2**	**ADJUSTABLE FLOATING 3 1/2 PULLEY BRACKET OPEN TOP**	**1**
***11**	**FLOATING TRIPLE PULLEY BRACKET**	**1**
15	**LAT CABLE (3/16" CABLE)**	**1**
52	7/8 RD X 1 5/8 LINK 3/16 CABLE	1
76	CABLE STOPPER SHELL 1 1/2 X 1 3/4	1
108	NYLON SHORT HANDLE	1
109	OVAL HEAD PHILLIPS MACHINE SCREW Z/P #10-32 X 1 1/8	1
129	SNAP LINK Z/P 8MM X 80MM	1
137	**CABLE BRIDGE BRACKET**	**1**

Note:

1. Some parts not shown/cut out for clarity.

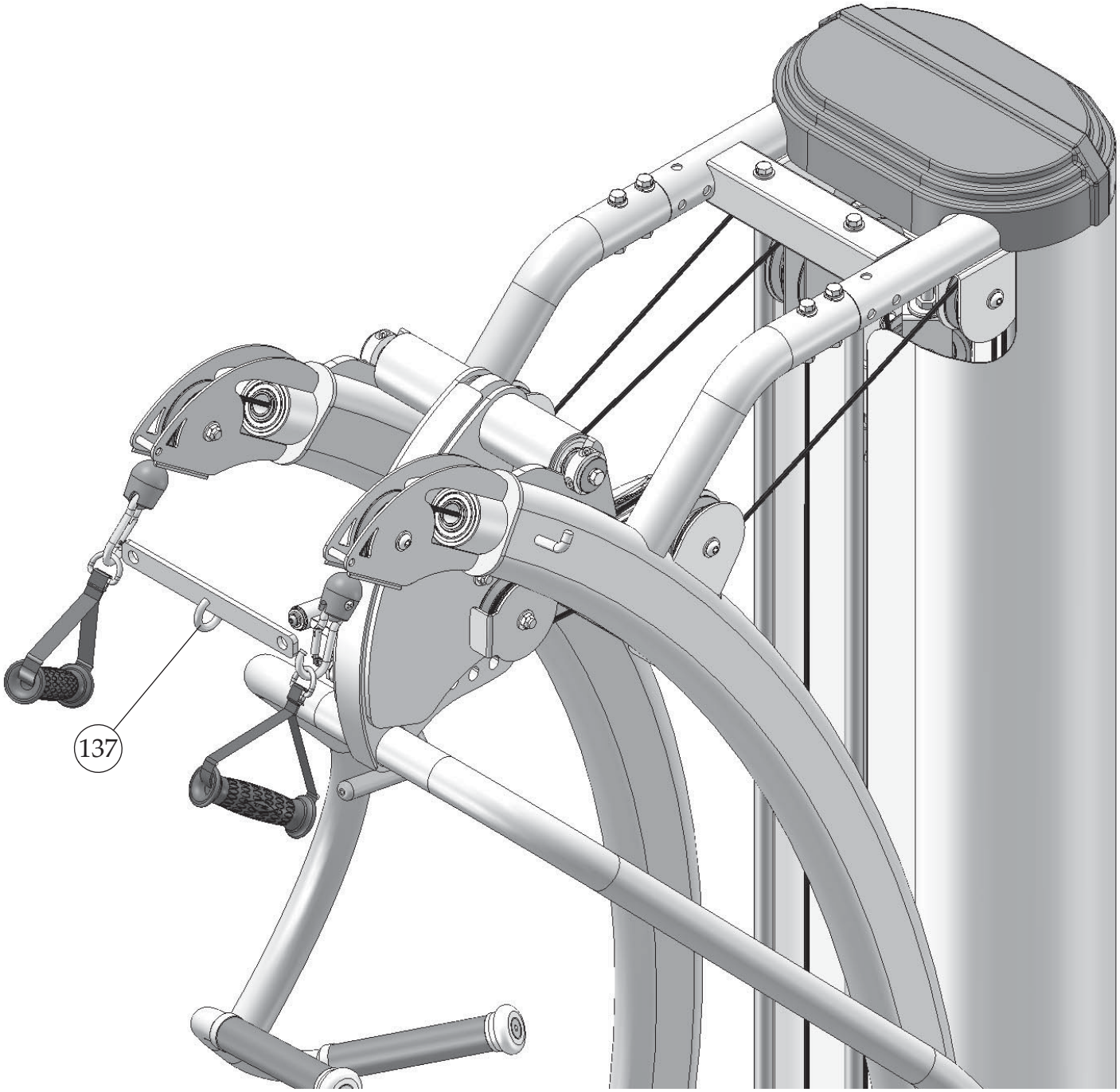

Step 9 Mid/Low Row Cable

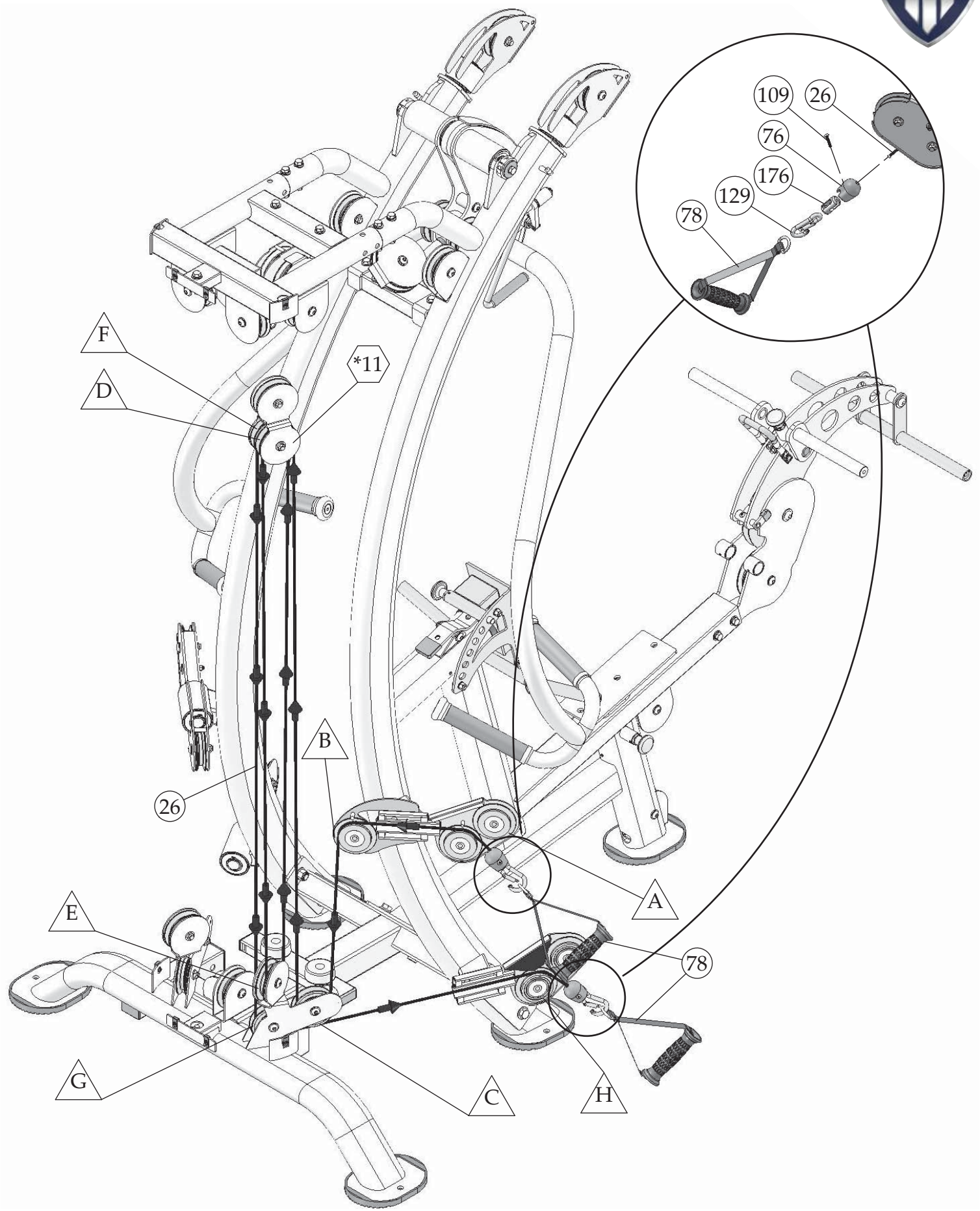

Step 9 Assembly List

Item #	Description	Qty.
***11**	**FLOATING TRIPLE PULLEY BRACKET**	**1**
26	**MID ROW CABLE (1/8" CABLE)**	**1**
76	CABLE STOPPER SHELL 1 1/2 X 1 3/4	2
78	CONTOUR ERGO HANDLE LONG STRAP	2
109	OVAL HEAD PHILLIPS MACHINE SCREW Z/P #10-32 X 1 1/8	2
129	SNAP LINK Z/P 8MM X 80MM	2
176	7/8 RD X 1 5/8 LINK 1/8 CABLE	2

Note:

1. Some parts not shown/cut out for clarity.

Step 10 Mid/Low Row Cable

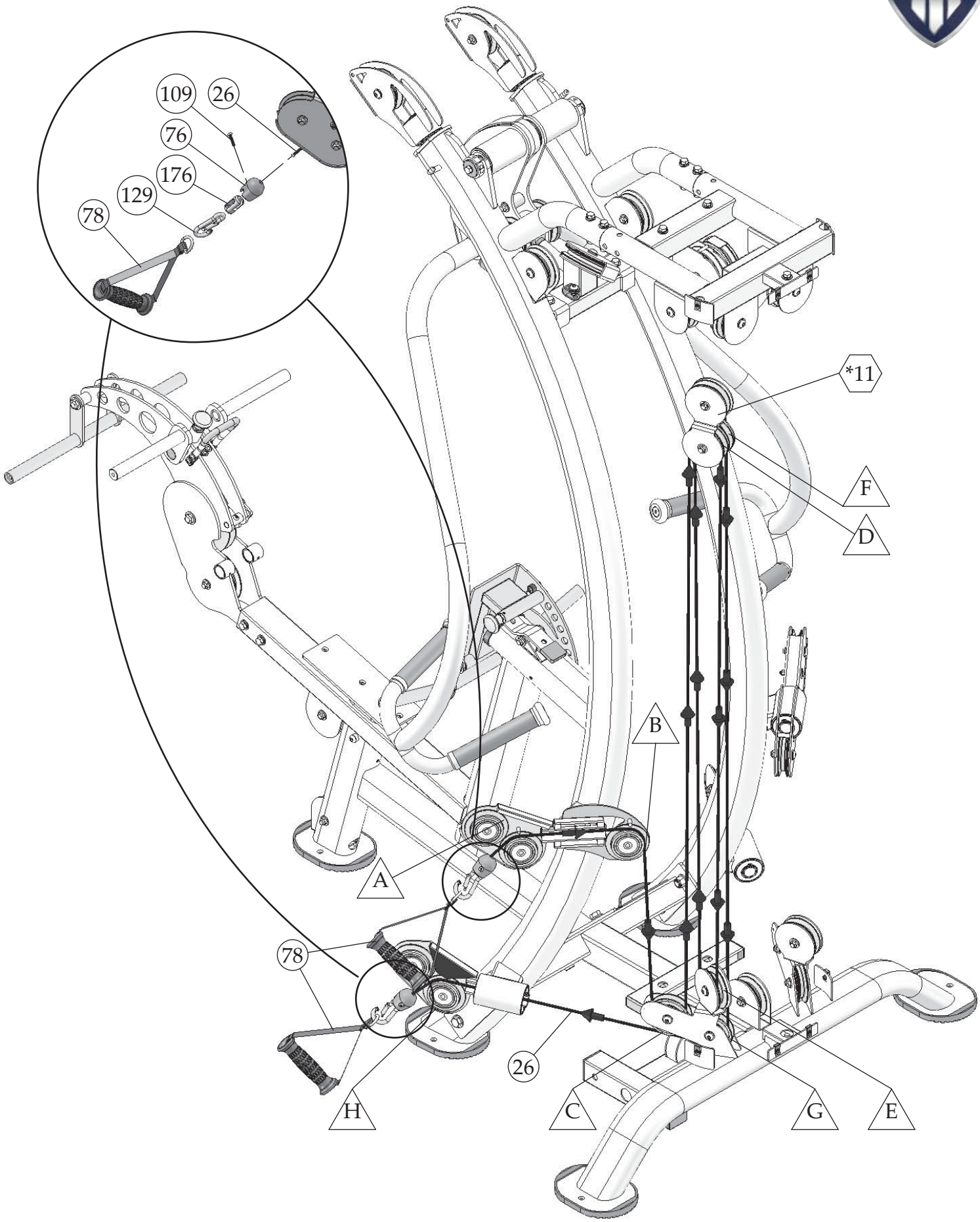

Step 10 Assembly List

Item #	Description	Qty.
***11**	**FLOATING TRIPLE PULLEY BRACKET**	**1**
26	**MID ROW CABLE (1/8" CABLE)**	**1**
76	CABLE STOPPER SHELL 1 1/2 X 1 3/4	2
78	CONTOUR ERGO HANDLE LONG STRAP	2
109	OVAL HEAD PHILLIPS MACHINE SCREW Z/P #10-32 X 1 1/8	2
129	SNAP LINK Z/P 8MM X 80MM	2
176	7/8 RD X 1 5/8 LINK 1/8 CABLE	2

Note:

1. Some parts not shown/cut out for clarity.

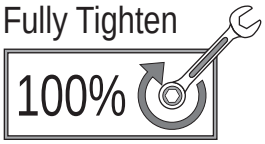

Fully Tighten

Wrench tighten all hardware in this step.

Step 11 Press Bar Cable

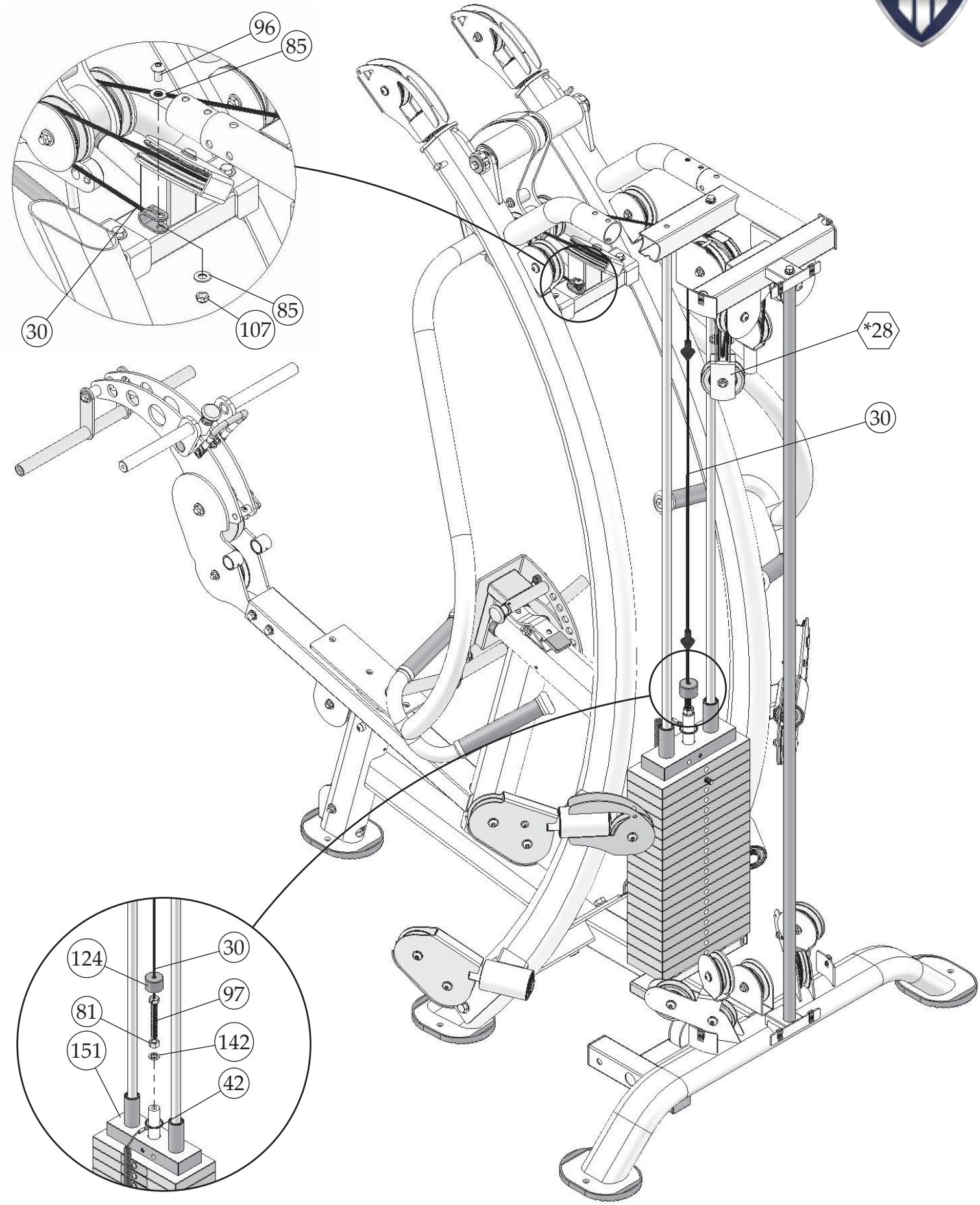

Step 11 Assembly List

Item #	Description	Qty.
***28**	**OFFSET DOUBLE PULLEY BRACKET**	**1**
30	**PRESS BAR CABLE (3/16" CABLE)**	**1**
42	**SELECTOR PIN**	**1**
81	FINISHED HEX NUT Z/P 1/2-13	1
85	FLAT WASHER SAE Z/P 3/8"	2
96	BUTTON HEAD SOCKET CAP SCREW GR-8 Z/P 3/8-16 X 5/8	1
97	SPLIT HEX TAP BOLT GR-5 B/O 1/2-13 X 3 1/2 (RND CUT)	1
107	NYLON INSERT THIN PATTERN LOCK NUT Z/P 3/8-16	1
124	RUBBER BUMPER	1
142	SPLIT LOCK WASHER Z/P 1/2"	1
151	10 LB TOP PLATE W/ADJ SLTR BAR 19 BLK WTS ASSY	1

Note:

1. Some parts not shown/cut out for clarity.
2. Fasten bolt to depth of 1″ inside the top plate
3. This cable adjustment will adjust the following cables
   A. Lat and Press Bar cable

Step 11 Press Bar Cable Continued

1

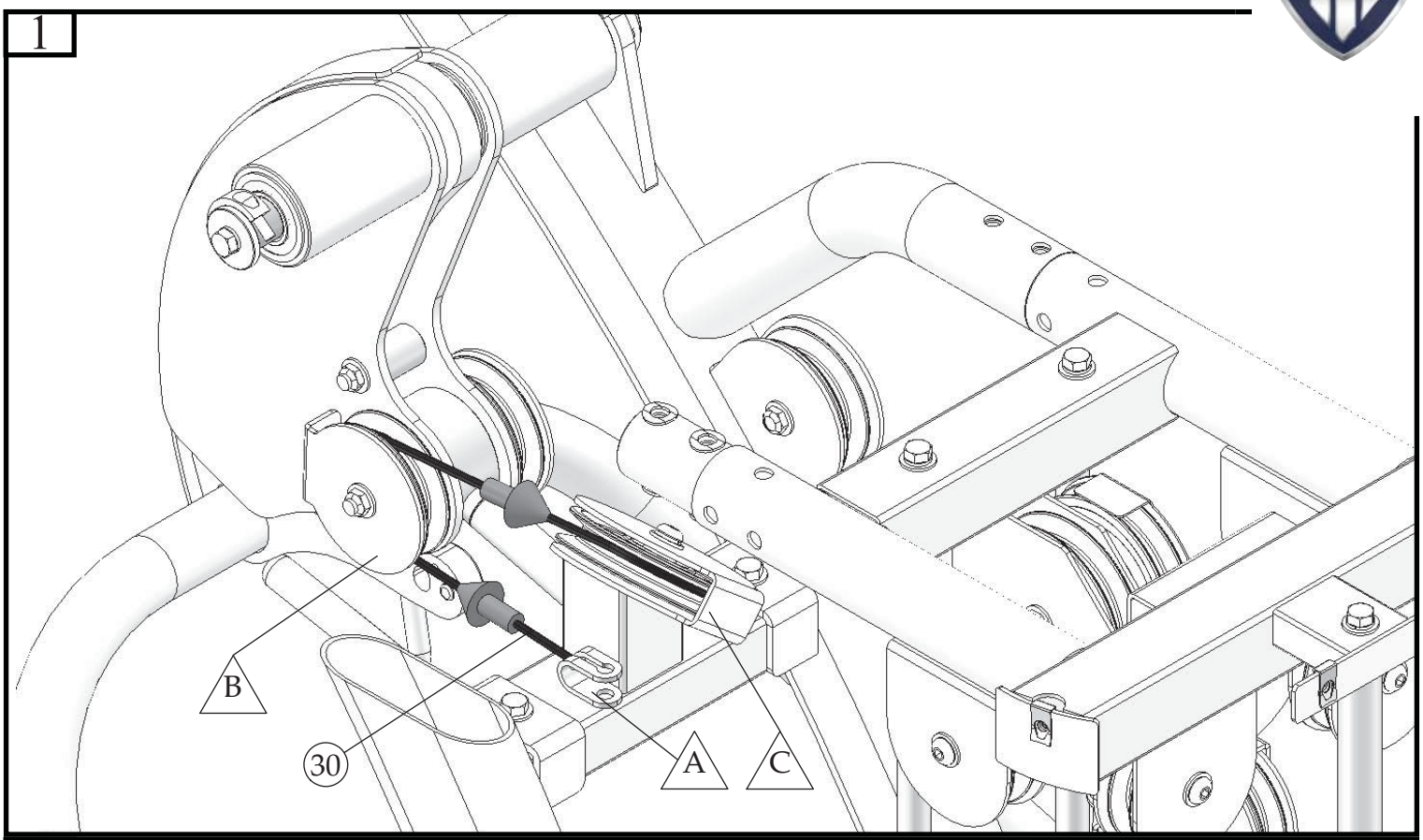

2

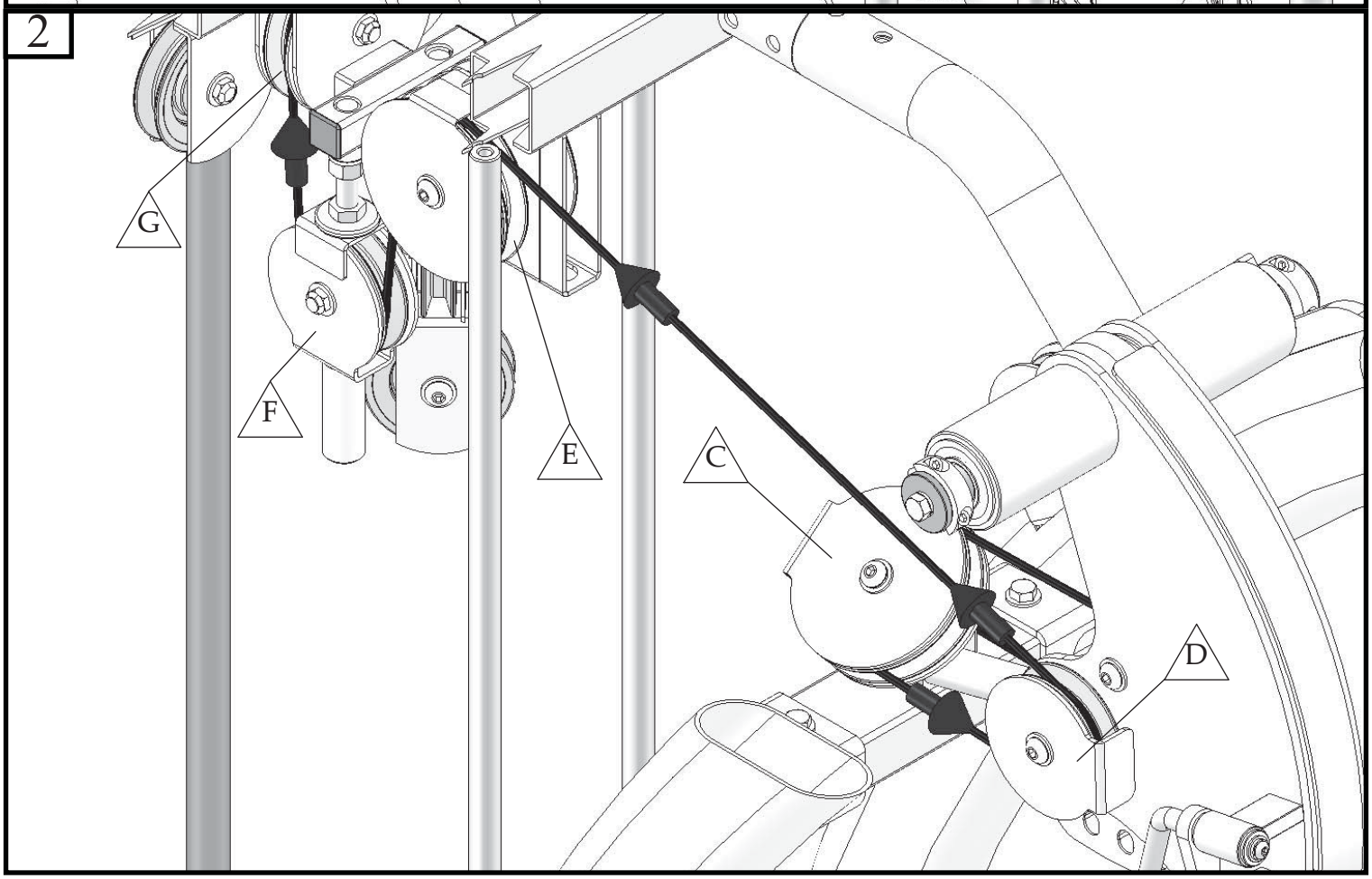

Step 11 Press Bar Cable Continued

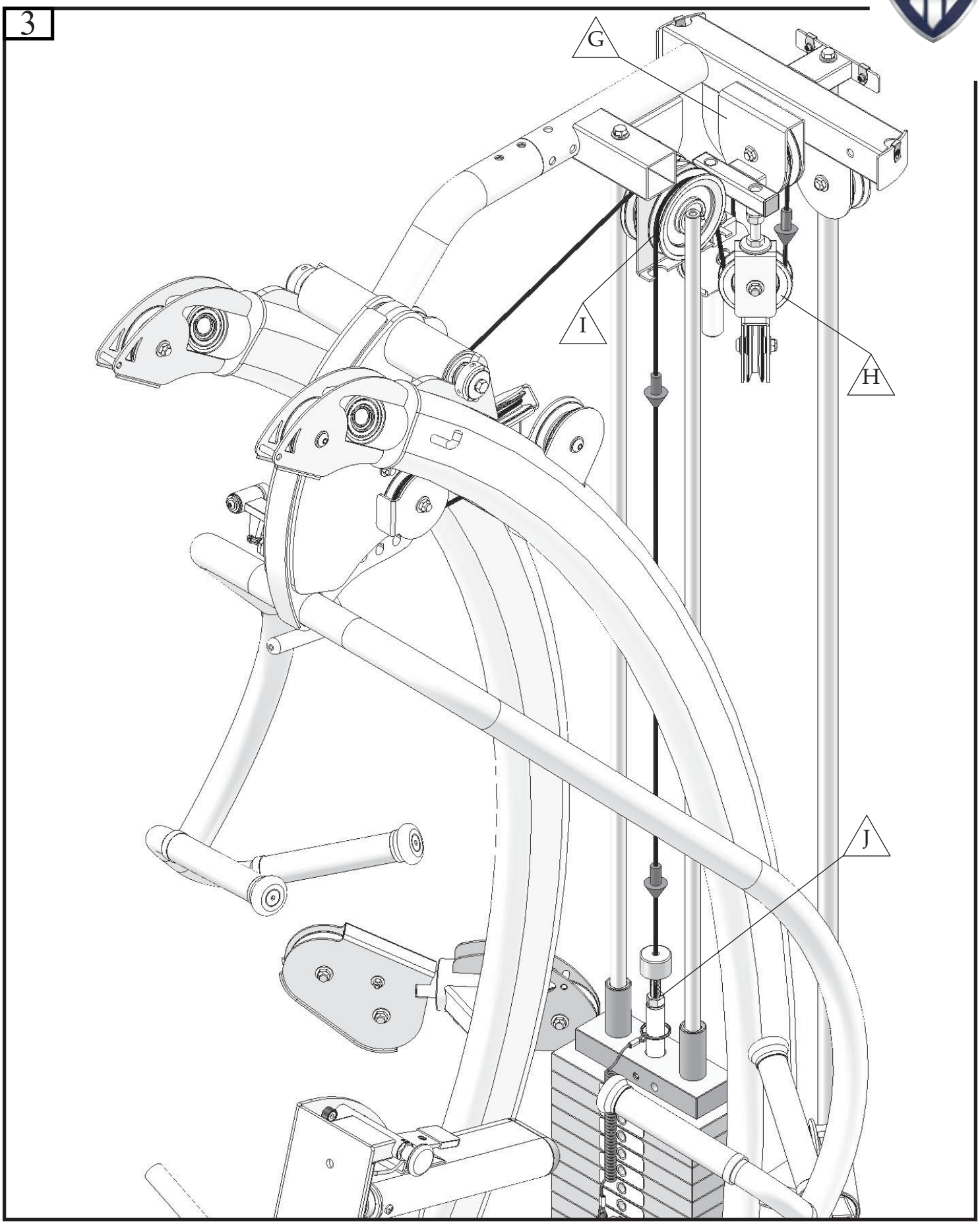

Step 12 Tension Cable

NOTE:
(ONLY FOR CUSTOMERS WHO PURCHASED AN SXT-LP ALONG WITH THIS UNIT)
1. DON'T ASSEMBLE THIS CABLE. THE SXT-LP CABLE WILL REPLACE THIS CABLE.
2. SKIP TO THE SXT-LP OWNER'S MANUAL TO CONTINUE WITH ASSEMBLY.
3. AFTER COMPLETING SXT-LP ASSEMBLY, COME BACK TO THIS MANUAL AND CONTINUE ON STEP 13.

Step 12 Assembly List

Item #	Description	Qty.
***2**	**ADJUSTABLE PULLEY BRACKET (4 1/2)**	**1**
***28**	**OFFSET DOUBLE PULLEY BRACKET**	**1**
45	**TENSION CABLE (3/16" CABLE)**	**1**
70	BUTTON HEAD SOCKET CAP SCREW Z/P 3/8-16 X 1 3/4	1
81	FINISHED HEX NUT Z/P 1/2-13	1
85	FLAT WASHER SAE Z/P 3/8"	2
97	SPLIT HEX TAP BOLT GR-5 B/O 1/2-13 X 3 1/2 (RND CUT)	1
107	NYLON INSERT THIN PATTERN LOCK NUT Z/P 3/8-16	1
136	STRAP BRACKET 20 #SF20 STAINLESS STEEL	1
142	SPLIT LOCK WASHER Z/P 1/2"	1

Note:
1. Some parts not shown/cut out for clarity.
2. Fasten bolt to a depth of 1"
3. This cable adjustment will adjust the following cables
   A. Mid/Low Row cable.

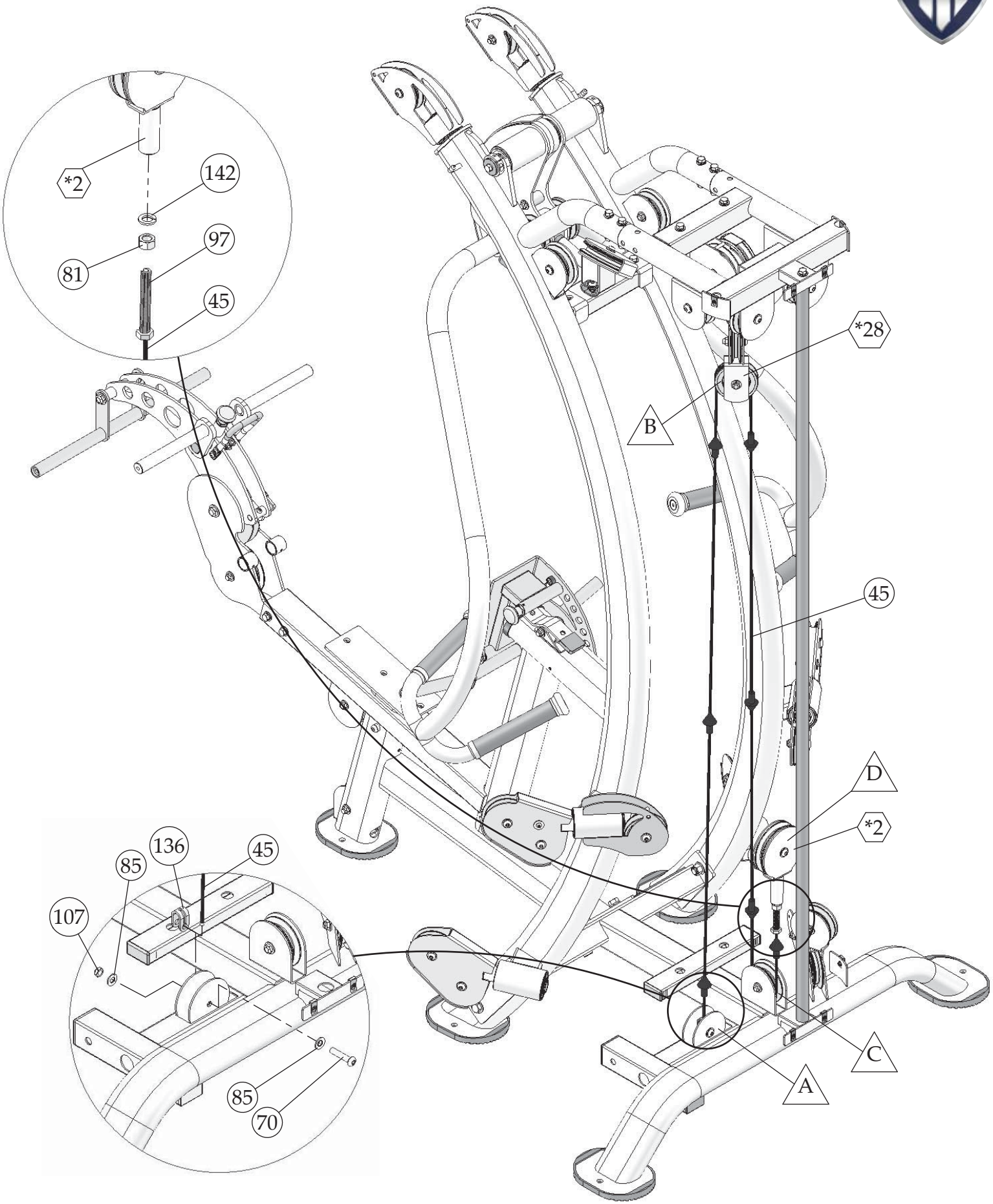
*2
142
97
81
45
*28
B
45
D
*2
136
45
85
107
85
70
C
A

Step 13 Leg Extension/Curl Cable

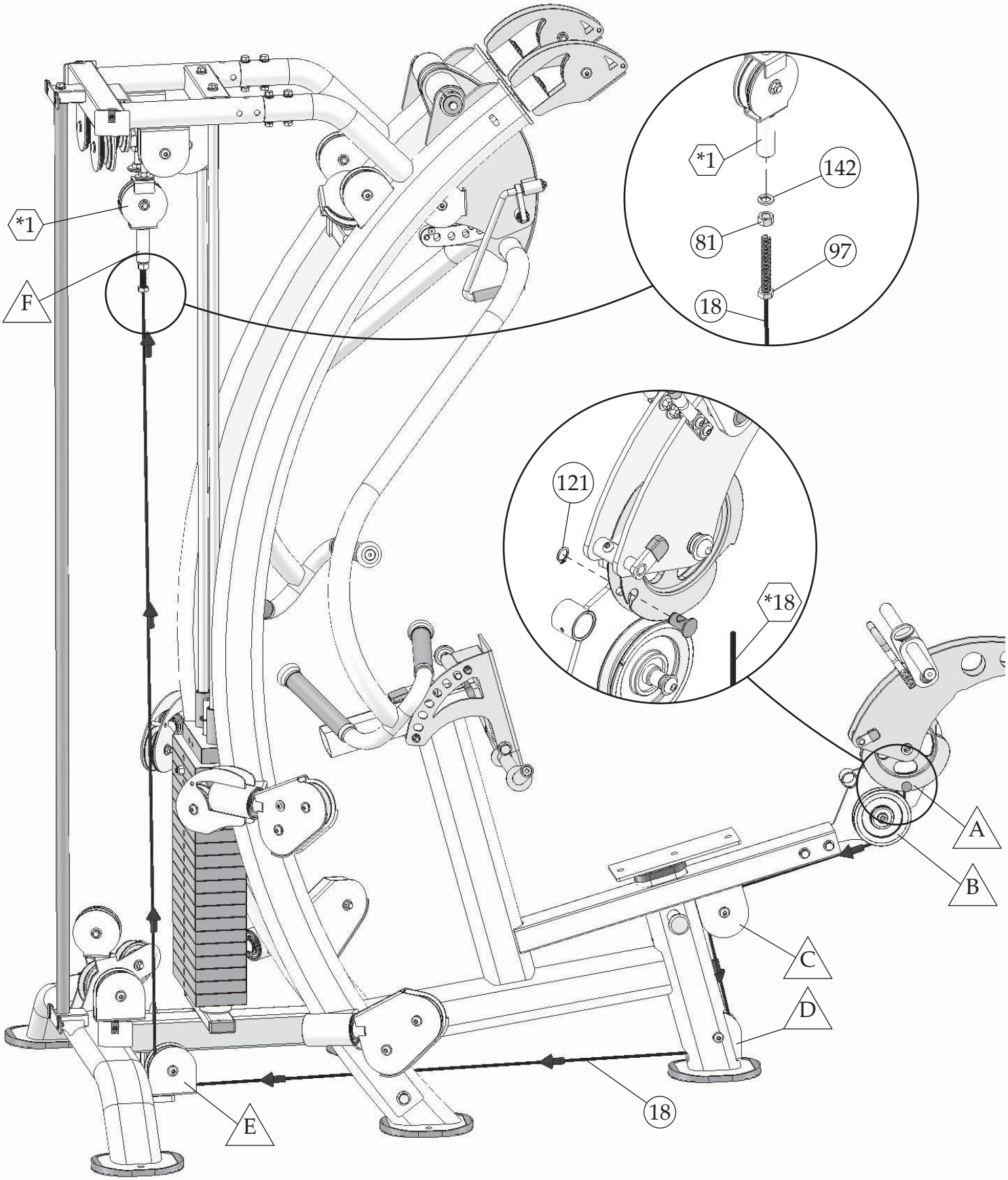

Step 13 Assembly List

Item #	Description	Qty.
***1**	**ADJUSTABLE FLOATING 3 1/2 PULLEY BRACKET**	**1**
***18**	**LEG EXT/CURL CABLE (3/16" CABLE)**	**1**
81	FINISHED HEX NUT Z/P 1/2-13	1
97	SPLIT HEX TAP BOLT GR-5 B/O 1/2-13 X 3 1/2 (RND CUT)	1
121	RETAINING SNAP RING EXT. PLAIN .461 X .500 X .035	1
142	SPLIT LOCK WASHER Z/P 1/2"	1

Note:

1. Some parts not shown/cut out for clarity.
2. Make sure bracket #*1 is resting against the adjustable stopper #4
3. This cable adjustment will adjust the following cables
   A. Leg Extension/Curl cable
4. After installing the cables do a few sets on each station to pre-stretch the cable.
5. Make any necessary cable re-adjustments.

Step 14

Step 14 Assembly List		
Item #	**Description**	**Qty.**
***48**	**WEIGHT SHIELD LT**	**1**
***49**	**WEIGHT SHIELD RT**	**1**
67	BUTTON HEAD SOCKET CAP SCREW GR-8 Z/P 1/4-20 X 3/4	8
86	FLAT WASHER USS Z/P 1/4”	8
116	PLASTIC LID	1

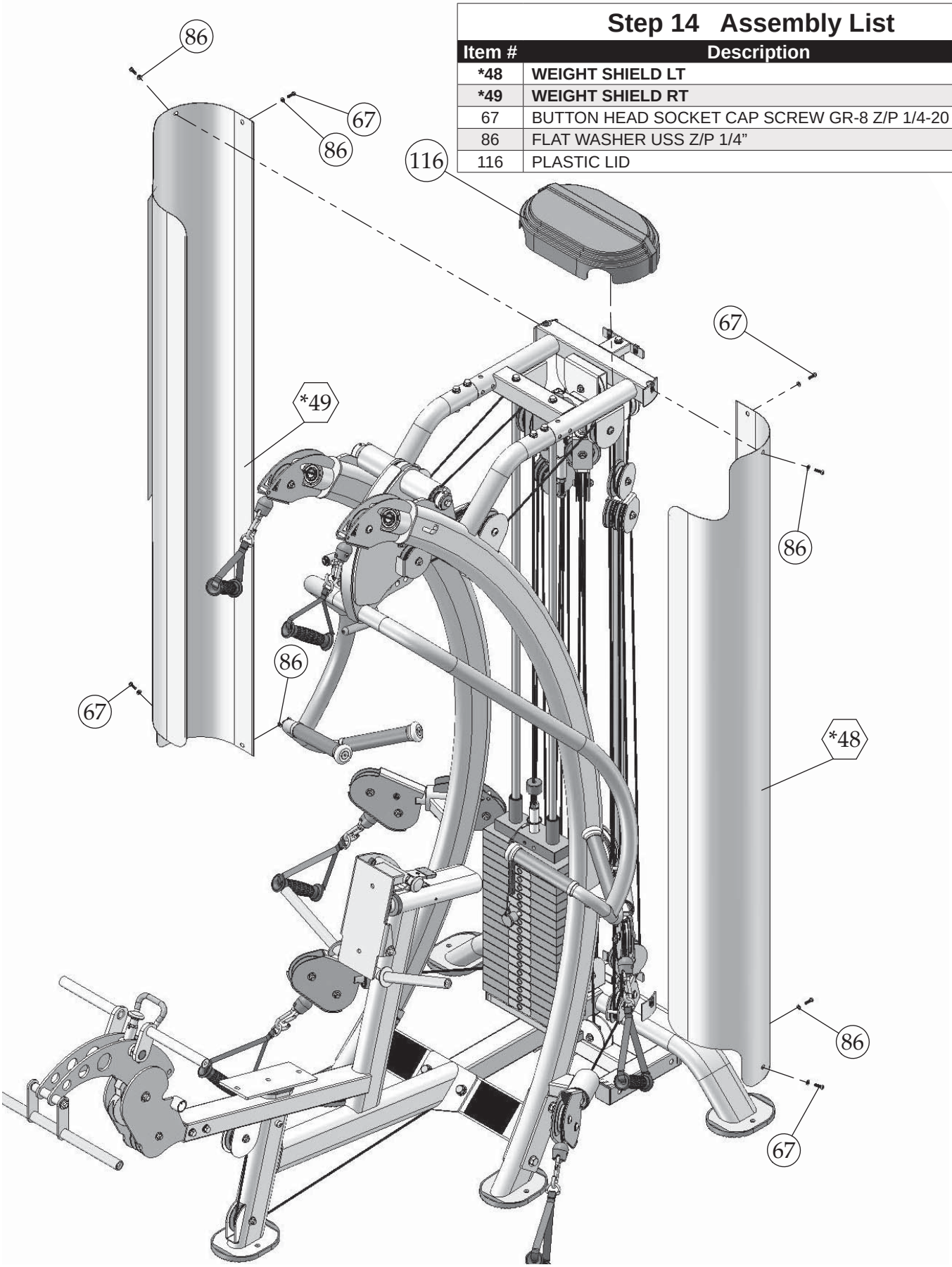

Step 15

Step 15 Assembly List		
Item #	**Description**	**Qty.**
13	**FOOT ROLL TUBE 1 X 19 1/2**	**1**
132	SOCKET SET SCREW Z/P 10-32 X 1/8	2

Step 16

Step 16 Assembly List		
Item #	**Description**	**Qty.**
6	**BACK PAD**	**1**
12	**FOOT ROLL**	**8**
40	**SEAT PAD**	**1**
54	ALUMINUM FOOT ROLL END CAP	8
55	ALUMINUM FOOT ROLL END CAP 1”	8
69	BUTTON HEAD SOCKET CAP SCREW Z/P 3/8-16 X 1 1/4	4
83	FLAT HEAD SOCKET HEAD Z/P 3/8-16 X 1	8
85	FLAT WASHER SAE Z/P 3/8”	4
102	NYLON FOOT ROLL BUSHING	16
175	NYLON FLAT WASHER 1 X 1 1/4 X 1/16	8

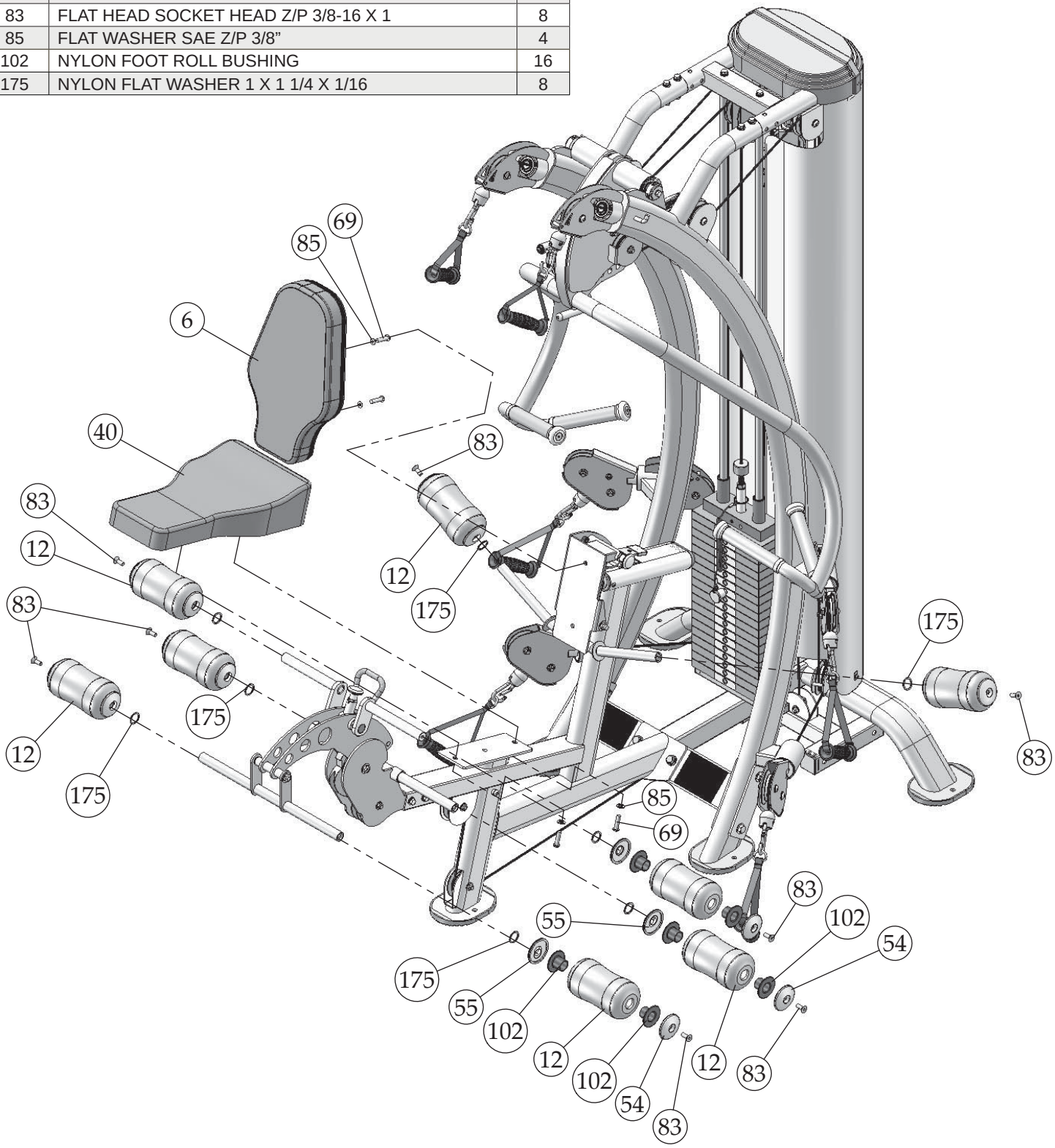

Parts List

COLOR CHART
GRAY= SUB-ASSEMBLY PARTS
BLACK= HARDWARE

SXT-550

Parts List

Item No.	Description	Rev.	Part No.	Qty.	Item No.	Description	Rev.	Part No.	Qty.
1	ADJUSTABLE FLOATING 3 1/2 PULLEY BRACKET	0	UP7720	1	66	BUTTON HEAD SOCKET CAP SCREW Z/P 1/4-20 X 1 3/4		BNH3331	2
2	ADJUSTABLE FLOATING 3 1/2 PULLEY BRACKET OPEN TOP	0	UP7986	1	67	BUTTON HEAD SOCKET CAP SCREW Z/P 1/4-20 X 3/4		BNH2995	8
3	ADJUSTABLE RELEASE HANDLE	0	UP7676	1	68	LABEL-CAUTION CHECK PULL-PIN IS FULLY... 1 1/2 X 1 3/8		BNH2912	5
4	ADJUSTABLE STOPPER 2 3/4	0	UP7679	2	69	BUTTON HEAD SOCKET CAP SCREW Z/P 3/8-16 X 1 1/4		BNH2984	4
5	AXLE 1 RD. X 11 11/16	0	UP7710	1	70	BUTTON HEAD SOCKET CAP SCREW Z/P 3/8-16 X 1 3/4		BNH2426	36
6	BACK PAD	0	UP7652	1	71	BUTTON HEAD SOCKET CAP SCREW Z/P 3/8-16 X 2 1/2		BNH3316	3
7	BACK PAD ADJUSTMENT TUBE	0	UP7654	1	72	BUTTON HEAD SOCKET CAP SCREW Z/P 3/8-16 X 2 3/4		BNH2996	2
8	BACK PAD BRACKET	0	UP7653	1	73	BUTTON HEAD SOCKET CAP SCREW Z/P 3/8-16 X 3		BNH2673	1
9	TOP CROSS BRACE	0	UP8421	1	74	BUTTON HEAD SOCKET CAP SCREW Z/P 3/8-16 X 3 1/4		BNH3321	1
10	CAM	0	UP7669	1	75	BUTTON HEAD SOCKET CAP SCREW Z/P 3/8-16 X 4 3/4		BNH3348	1
11	FLOATING TRIPLE PULLEY BRACKET	0	UP7759	2	76	CABLE STOPPER SHELL 1 1/2 X 1 3/4		BNH4230	6
12	FOOT ROLL	0	UP3785	8	77	SUPPORT WASHER Z/P 3/8 ID X 1 1/2 OD X 3/16		BNH3343	2
13	FOOT ROLL TUBE 1 X 19 1/2	0	UP7717	1	78	CONTOUR ERGO HANDLE LONG STRAP		BNH2738	4
14	GUIDE ROD 3/4 X 72	0	UP7657	2	79	RUBBER FOOT FOR 6 X 4 1/4 PLATE		BNH1647	5
15	LAT CABLE 3/16" X 254"	0	UP7729	1	80	EX. STRENGTH STEEL COILED SPRING PIN 5/16 X 1 1/4		BNH3309	1
16	LEG EXT/CURL ASSEMBLY LT	0	UP7711	1	81	FINISHED HEX NUT Z/P 1/2-13		BNH0206	5
17	LEG EXT/CURL ASSEMBLY RT	0	UP7712	1	82	FLAT HEAD SOCKET CAP SCREW Z/P 1/4-20 X 1/2		BNH2972	3
18	LEG EXT/CURL CABLE 3/16" X 143"	0	UP7735	1	83	FLAT HEAD SOCKET HEAD Z/P 3/8-16 X 1		BNH3315	12
19	LEG EXT/CURL PIVOT ARM	0	UP7659	1	84	FLAT WASHER SAE Z/P 1/2"		BNH2031	18
20	LEG EXT/CURL PIVOT ARM LOCK	0	UP7672	1	85	FLAT WASHER SAE Z/P 3/8"		BNH2030	108
21	LEG EXT/CURL PIVOT ARM LOCK KNOB	0	UP7670	1	86	FLAT WASHER USS Z/P 1/4"		BNH2105	8
22	LEG HOLD DOWN FRAME LT	0	UP7713	1	87	FLAT WASHER USS Z/P 5/16"		BNH2071	2
23	LEG HOLD DOWN FRAME RT	0	UP7714	1	88	RUBBER GRIP 1.1875 ID X .125 X 5 1/2		BNH0939	2
24	LOW SECTION SWIVEL PULLEY BRACKET	0	UP7674	2	89	RUBBER GRIP 1.1875 ID X .125 X 7		BNH0944	2
25	SIDE FRAME LT	0	UP7661	1	90	NYLON INSERT LOCK NUT Z/P 1/2-13		BNH2029	4
26	MID/LOW ROW CABLE 1/8" X 293"	0	UP7730	2	91	HEX HEAD CAP SCREW GR-5 Z/P 1/2-13 X 1 1/4		BNH2167	2
27	MID SECTION SWIVEL PULLEY BRACKET	0	UP7678	2	92	BUTTON HEAD SOCKET CAP SCREW GR-8 Z/P 1/2-13 X 3		BNH3667	1
28	OFFSET DOUBLE PULLEY BRACKET	0	UP7756	1	93	HEX HEAD CAP SCREW GR-5 Z/P 1/2-13 X 6 1/4		BNH2067	1
29	PRESS BAR	0	UP7664	1	94	HEX HEAD CAP SCREW GR-5 Z/P 3/8-16 X 1		BNH2037	17
30	PRESS BAR CABLE 3/16" X 148 1/2"	0	UP7734	1	95	LABEL-DANGER CHECK RETAINING NUT... 1.5 X 1		BNH3146	4
31	PRESS BAR HOUSING LT	0	UP7662	1	96	BUTTON HEAD SOCKET CAP SCREW GR-8 Z/P 3/8-16 X 5/8		BNH2443	1
32	PRESS BAR HOUSING RT	0	UP7785	1	97	SPLIT HEX TAP BOLT GR-5 B/O 1/2-13 X 3 1/2 (RND CUT)		BNH1814	3
33	PRESS BAR RELEASE HANDLE	0	UP7716	1	98	ALUMINUM COLLAR		BNH3688	4
34	PULLEY COVER 4 1/2	0	UP7780	1	99	NYLON ANKLE STRAP		BNH3203	1
35	PULLEY COVER PLATE 3 1/2	0	UP7663	2	100	NYLON BUMPER .67 DIA X .41		BNH3327	2
36	REAR STABILIZER	0	UP7665	1	101	NYLON FLAT WASHER 1 X 1 1/4 X 1/16		BNH0393	8
37	REAR SUPPORT SHAFT	0	UP8419	1	102	NYLON FOOT ROLL BUSHING		BNH1807	16
38	SCRATCH PROTECTOR	0	UP8418	1	103	HEX HEAD CAP SCREW GR-5 Z/P 3/8-16 X 1 3/4		BNH2040	1
39	SEAT FRAME	0	UP7666	1	104	NYLON INSERT LOCK NUT Z/P 1/4-20		BNH2983	6
40	SEAT PAD	0	UP7667	1	105	NYLON INSERT LOCK NUT Z/P 5/16-18		BNH2056	2
41	SEAT PAD ADJUSTMENT TUBE	0	UP7673	1	106	NYLON INSERT THIN PATTERN LOCK NUT Z/P 1/2-13		BNH2027	3
42	SELECTOR PIN	0	UP3035	1	107	NYLON INSERT THIN PATTERN LOCK NUT Z/P 3/8-16		BNH2026	42
43	HANDLE	0	UP8391	1	108	NYLON SHORT HANDLE		BNH2739	2
44	SWIVEL FOOT ROLL TUBE	0	UP7660	1	109	OVAL HEAD PHILLIPS MACHINE SCREW Z/P #10-32 X 1 1/8		BNH2793	6
45	TENSION CABLE 3/16" X 140 1/2"	0	UP7732	1	110	OVAL TUBE PLASTIC GLIDE INSERT		BNH3345	2
46	TOP ASSEMBLY	0	UP7724	1	111	SUPER LUBE TEFLON LUBRICANT 82340		BNH0704	2
47	TOP SWIVEL PULLEY BRACKET	0	UP7668	2	112	PLASTIC INSERT CAP 1" X 2"		BNH0005	2
48	WEIGHT SHIELD LT	0	UP7658	1	113	PLASTIC INSERT CAP 1" X 3"		BNH0007	1
49	WEIGHT SHIELD RT	0	UP7677	1	114	PLASTIC INSERT CAP 2" SQ		BNH0012	2
50	SIDE FRAME RT	0	UP8420	1	115	PLASTIC INSERT CAP ELLIPTICAL 2 X 4		BNH1794	1
51	BUTTON HEAD SOCKET CAP SCREW Z/P 3/8-16 X 3/4		BNH3341	2	116	PLASTIC LID		BNH3269	1
52	7/8 RD X 1 5/8 LINK 3/16 CABLE		BNH4232	2	117	PULL PIN STIFF SPRING 17/32 X 1 1/2 K-105SS		BNH0519	1
53	ALUMINUM END CAP 1 1/4"		BNH3081	4	118	PUSH PULL PIN 1/2 X 2 7/8 LIGHT SPRING (RETAIL)		BNH0542	1
54	ALUMINUM FOOT ROLL END CAP		BNH3329	8	119	PULL PIN 1/2 X 5 5/8 LIGHT SPRING (YELLOW KNOB)		BNH0701	1
55	ALUMINUM FOOT ROLL END CAP 1"		BNH3328	8	120	PUSH PULL PIN 2 3/4		BNH1151	1
56	CORRUGATED RUBBER W/GS1054 PSA 3 1/2 X 5 1/8		BNH3368	2	121	RETAINING SNAP RING EXT. PLAIN .461 X .500 X .035		BNH1154	1
57	BALL BEARING #W 516, (1641-2RS-NR(SP)		BNH0628	8	122	RETAINING SNAP RING EXT. PLAIN .925 X 1 X .042		BNH0419	2
58	BALL BEARING R20-RS (1.1805 I.D. X 2.1675 X .51)		BNH1712	8	123	RETAINING SNAP RING EXT. PLAIN 1 1/4"		BNH1718	4
59	ALERT SIGN FOR HOME 8 1/2 X 11		BNH3139	1	124	BLACK NYLON BUMPER		BNH3308	1
60	BLACK DERLIN STOPPER 1 RD X 1 1/2		BNH3313	1	125	RUBBER DONUT 3/4 X 2 1/2		BNH0068	2
61	BLACK NYLON PULLEY 3/8 X 1 X 3 1/2		BNH0553	38	126	RUBBER GRIP FOR ADJUSTABLE RELEASE HANDLE		BNH1940	1
62	NYLON PULLEY 3/8 X 1 X 4 1/2 BLACK		BNH0506	5	127	HEX HEAD CAP SCREW GR-5 Z/P 1/2-13 X 4 3/4		BNH2168	1
63	BRONZE BUSHING 1 X 1 1/4 X 3/4 X 1 1/2 X 1/8		BNH0527	2	128	SINGLE STRAND CONNECTING LINK #40		BNH0066	1
64	BRONZE BUSHING SAE 841 (302033) .502X.628 X 1/2 X 7/8 X 1/8		BNH0528	8	129	SNAP LINK Z/P 8MM X 80MM		BNH0065	6
65	BUTTON HEAD SOCKET CAP SCREW Z/P 1/4-20 X 1		BNH3312	5	130	SOCKET CAP SCREW GR-8 Z/P 1/4-28 X 3/4		BNH2389	4

Parts List Continued

COLOR CHART
GRAY= SUB-ASSEMBLY PARTS
BLACK= HARDWARE

SXT-550
Parts List

Item No.	Description	Rev.	Part No.	Qty.	Item No.	Description	Rev.	Part No.	Qty.
131	SOCKET HEAD CAP SCREW Z/P 5/16-18 X 3/4		BNH3326	2	156	PULL PIN ASSY 3 1/2 CUSTOM CUT HRD SPRING		BNH1723	1
132	SOCKET SET SCREW Z/P 10-32 X 1/8		BNH2088	14	157	INTENDED BLANK			
133	SPLIT COLLAR B/O 1"		BNH0755	2	158	HEX HEAD CAP SCREW GR-5 Z/P 3/8-16 X 3		BNH2046	2
134	SPLIT LOCK WASHER Z/P 3/8"		BNH2520	22	159	LABEL-IMPORTANT FOR SMOOTH PERFORMANCE...		BNH2916	2
135	HEX KEY M14/M19		BNH3676	1	160	LABEL-WARNING ATTENTION USERS!... 2X1.5		BNH2911	2
136	STRAP BRACKET 20 #SF20 STAINLESS STEEL		BNH0562	1	161	LABEL-TFI SERIAL NO. 2.5 X 1.5		BNH3147	1
137	CABLE BRIDGE BRACKET		UP7700	1	162	LABEL-DANGER DO NOT LEAN AGAINST, 1.75X2.375		BNH3145	1
138	URETHANE BUMPER 962		BNH0244	1	163	LABEL-DANGER USE THIS EQUIPMENT ONLY...		BNH2903	1
139	U-STYLE TAPPED HOLE NUT 1/4-20		BNH0708	8	164	LABEL-IMPORTANT ADJUST CABLE TENSION HERE		BNH2924	3
140	YELLOW GRIP 1/2 X 4 (PVC)		BNH3059	1	165	LABEL-IMPORTANT FOR SMOOTH PERFORMANCE…		BNH2925	1
141	10 LB STEEL WEIGHT PLATE BLACK 4 9/16 X 9 7/16 (EA)		BNH1237	19	166	LABEL-INSPECTIONS RECOMMENDED INSPECTION…		BNH3155	1
142	SPLIT LOCK WASHER Z/P 1/2"		BNH0572	7	167	LABEL-NUMBERS 10-200 LBS/KGS 7/8 X 3 YELLOW & BLACK		BNH4069	1
143	INTERNAL RETAINER RING W/ LUGS 1 3/4" DIA.		BNH3370	1	168	LABEL-WARNING KEEP BODY, HANDS... 1 1/2 X 2 5/8		BNH2909	1
144	LABEL-DANGER DO NOT REMOVE... 7/8 X 1-1/2		BNH2906	2	169	LABEL-WARNING KEEP BODY, HANDS... 1X2-5/8		BNH2926	1
145	HEX HEAD CAP SCREW GR-5 Z/P 3/8-16 X 2 3/4		BNH2045	2	170	LABEL-WARNING_SERIOUS INJURY OR DEATH		BNH3157	1
146	HEX HEAD CAP SCREW GR-5 Z/P 3/8-16 X 2 1/2		BNH2044	2	171	LABEL-WARRANTY HOME LIFETIME		BNH3156	1
147	OVAL WASHER Z/P 3/8"		BNH3349	8	172	SPLIT LOCK WASHER Z/P 1/4		BNH3337	1
148	CAM BEARING		BNH3371	1	173	NYLON INSERT LOCK NUT Z/P 3/8-16		BNH2773	2
149	TFI EMBLEM 2.26 HIGH X 2.3770 WIDE BLUE AND CHROME		BNH4304	2	174	SUPER WASHER 1/4		BNH3389	1
150	HEX HEAD CAP SCREW GR-5 Z/P 1/2-13 X 3 1/4		BNH4199	4	175	NYLON FLAT WASHER 1 X 1 1/2 X 1/16		BNH3392	8
151	10 LB TOP PLATE W/ADJ SLTR BAR 19 BLK WTS ASSY		BNH1982	1	176	7/8 RD X 1 5/8 LINK 1/8 CABLE		BNH4231	4
152	3 RD X 1 1/2 TOPPER		BNH3318	1	177	LABEL-SXT-550 EXERCISE CHART (A)		BNH3169	1
153	LABEL-IMPORTANT CHECK CABLES		BNH3113	2	178	LABEL-SXT-550 EXERCISE CHART (B)		BNH3170	1
154	FLAT WASHER USS Z/P 1/4"		BNH2105	12	179	CABLE PIVOT END		UP7723	1
155	BUTTON HEAD SOCKET CAP SCREW GR-8 Z/P 1/4-20 X 3/4		BNH2995	2	180	HEX HEAD CAP SCREW GR-5 Z/P 3/8-16 X 4 5/8		BNH3687	1

PRE ASSEMBLED COMPONENTS

Item No.	Description	Rev.	Part No.	Qty.	Item No.	Description	Rev.	Part No.	Qty.
*1	ADJUSTABLE FLOATING 3 1/2 PULLEY BRACKET	0	UP7720X1	1	*36	REAR STABILIZER	0	UP7665X1	1
*2	ADJUSTABLE FLOATING 3 1/2 PULLEY BRACKET OPEN TOP	0	UP7986X1	1	*39	SEAT FRAME	0	UP7666X1	1
*8	BACK PAD BRACKET	0	UP7653X1	1	*46	TOP ASSEMBLY	0	UP7724X1	1
*9	TOP CROSS BRACE	0	UP8421X1	1	*47	TOP SWIVEL PULLEY BRACKET RT	0	UP7668X1	1
*11	FLOATING TRIPLE PULLEY BRACKET	0	UP7759X1	2	*48	WEIGHT SHIELD LT	0	UP7658X1	1
*19	LEG EXT/CURL PIVOT ARM	0	UP7659X1	1	*49	WEIGHT SHIELD RT	0	UP7677X1	1
*24	LOW SECTION SWIVEL PULLEY BRACKET RT	0	UP7674X1	1	*50	SIDE FRAME RT	0	UP8420X1	1
*25	SIDE FRAME LT	0	UP7661X1	1	*200	LOW SECTION SWIVEL PULLEY BRACKET LT	0	UP7674X2	1
*27	MID SECTION SWIVEL PULLEY BRACKET RT	0	UP7678X1	1	*201	MID SECTION SWIVEL PULLEY BRACKET LT	0	UP7678X2	1
*28	OFFSET DOUBLE PULLEY BRACKET	0	UP7756X1	1	*202	TOP SWIVEL PULLEY BRACKET LT	0	UP7668X2	1
*29	PRESS BAR	0	UP7664X1	1					

Pre Assembled Components

*1 UP7720X1

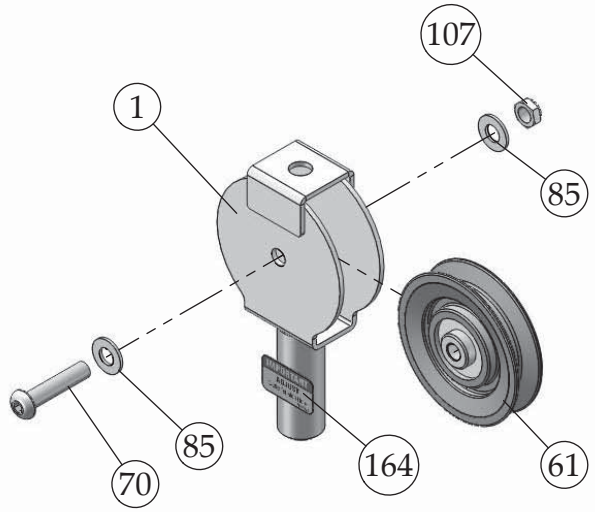

*2 UP7986X1

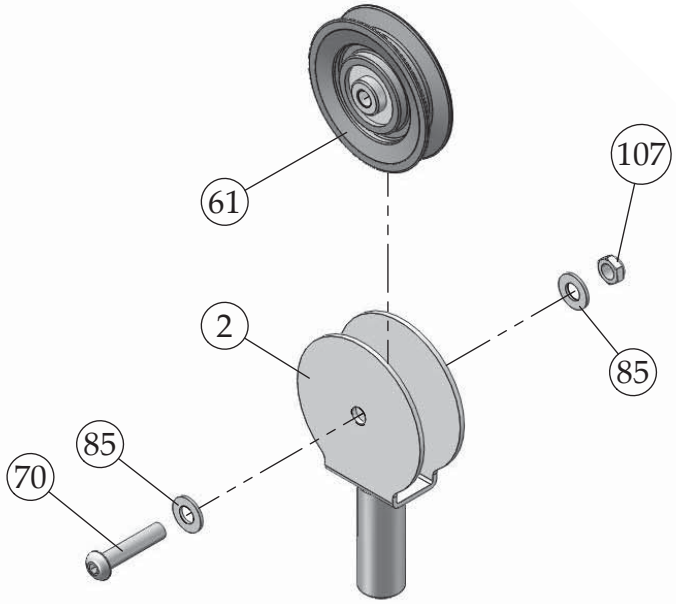

*11 UP7759X1

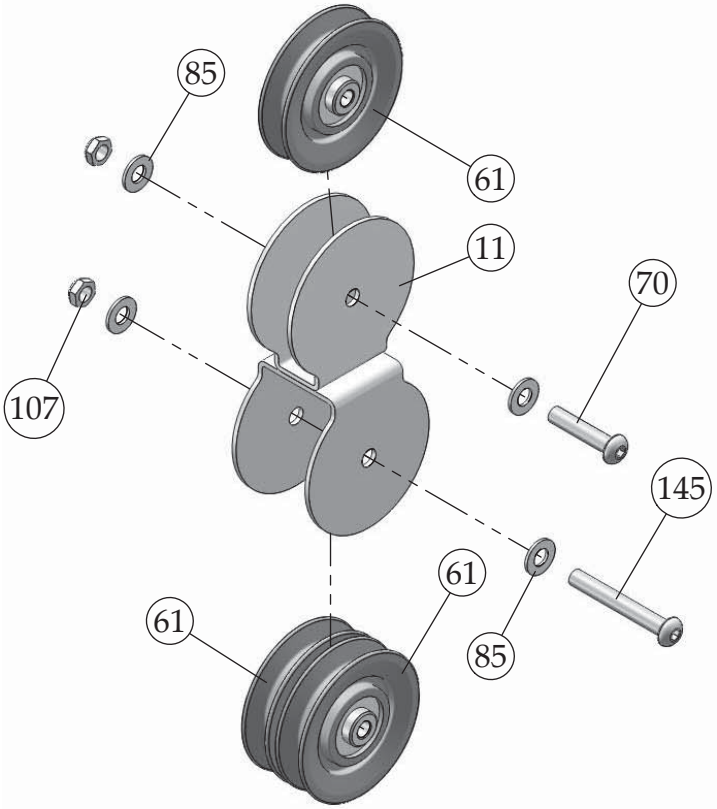

*24 UP7674X1

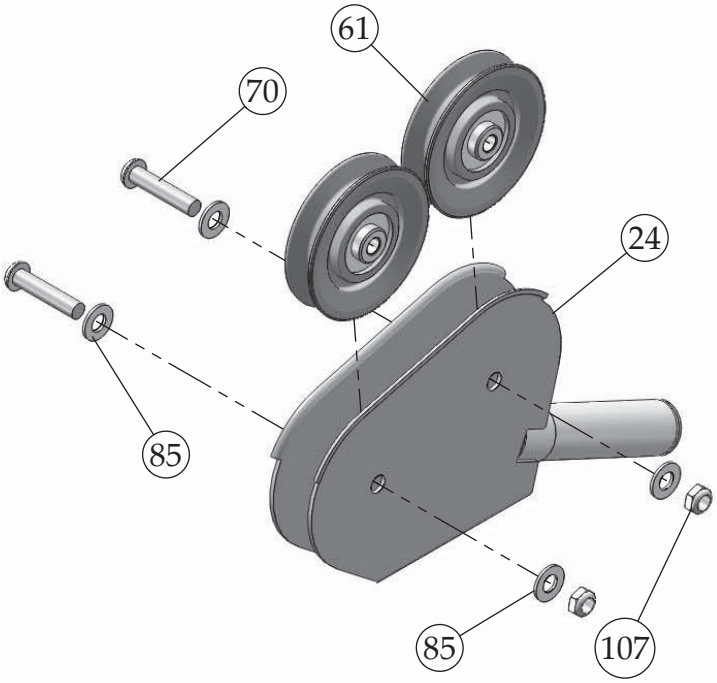

Pre Assembled Components

*27 UP7678X1

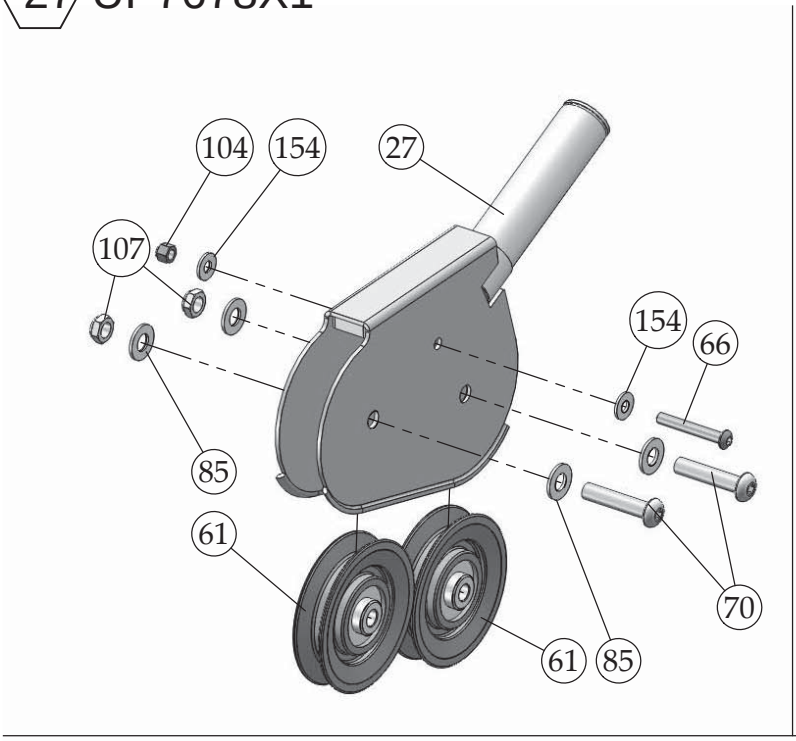

*28 UP7756X1

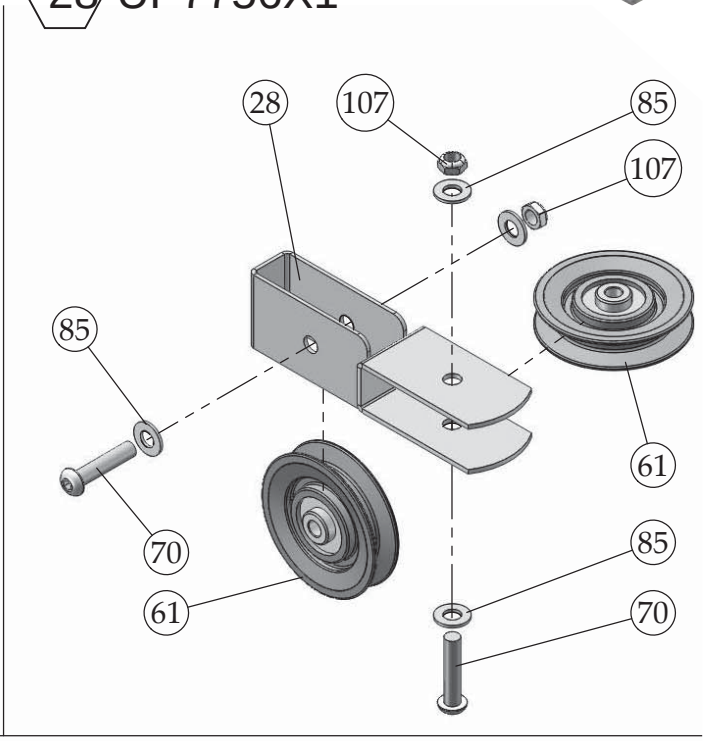

*29 UP7664X1

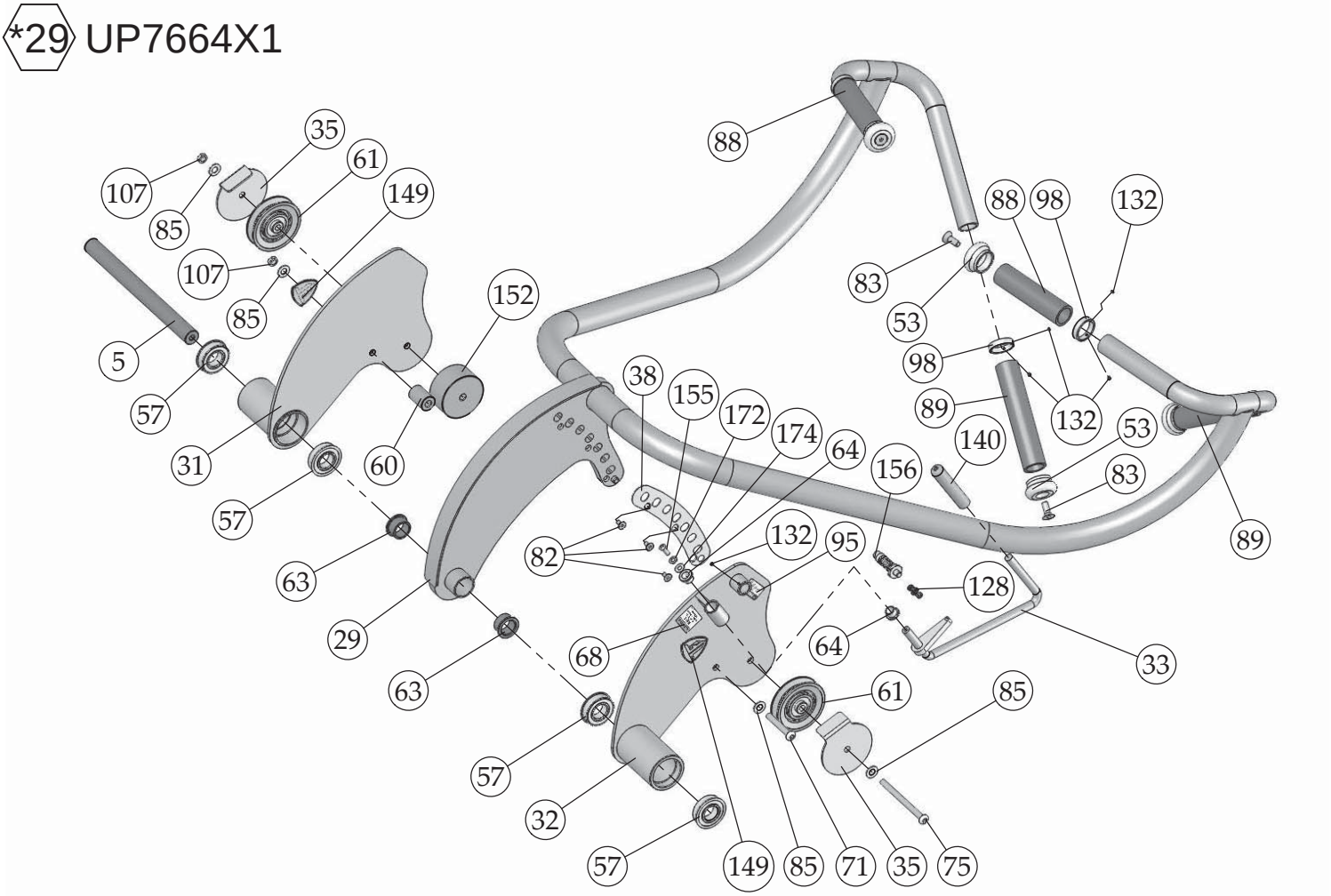

Pre Assembled Components

*36 UP7665X1

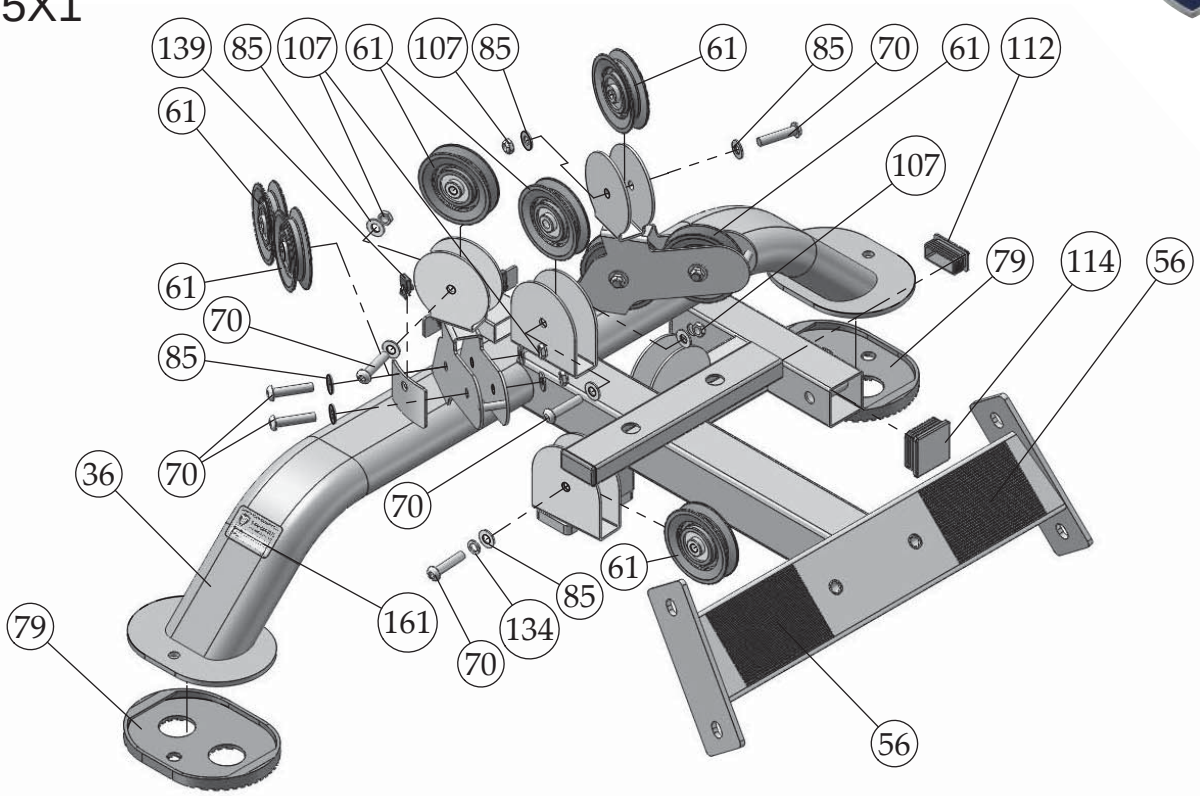

*39 UP7666X1

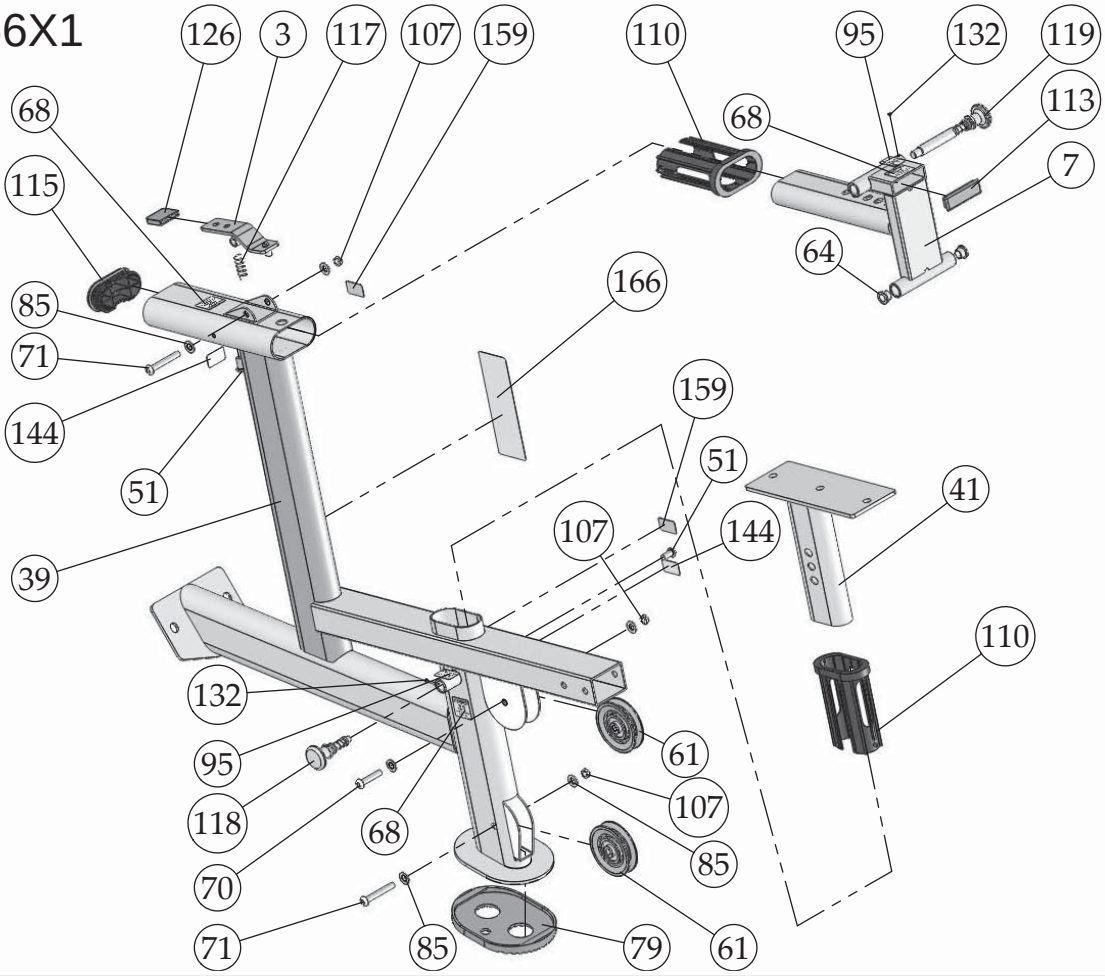

Pre Assembled Components

*46 UP7724X1

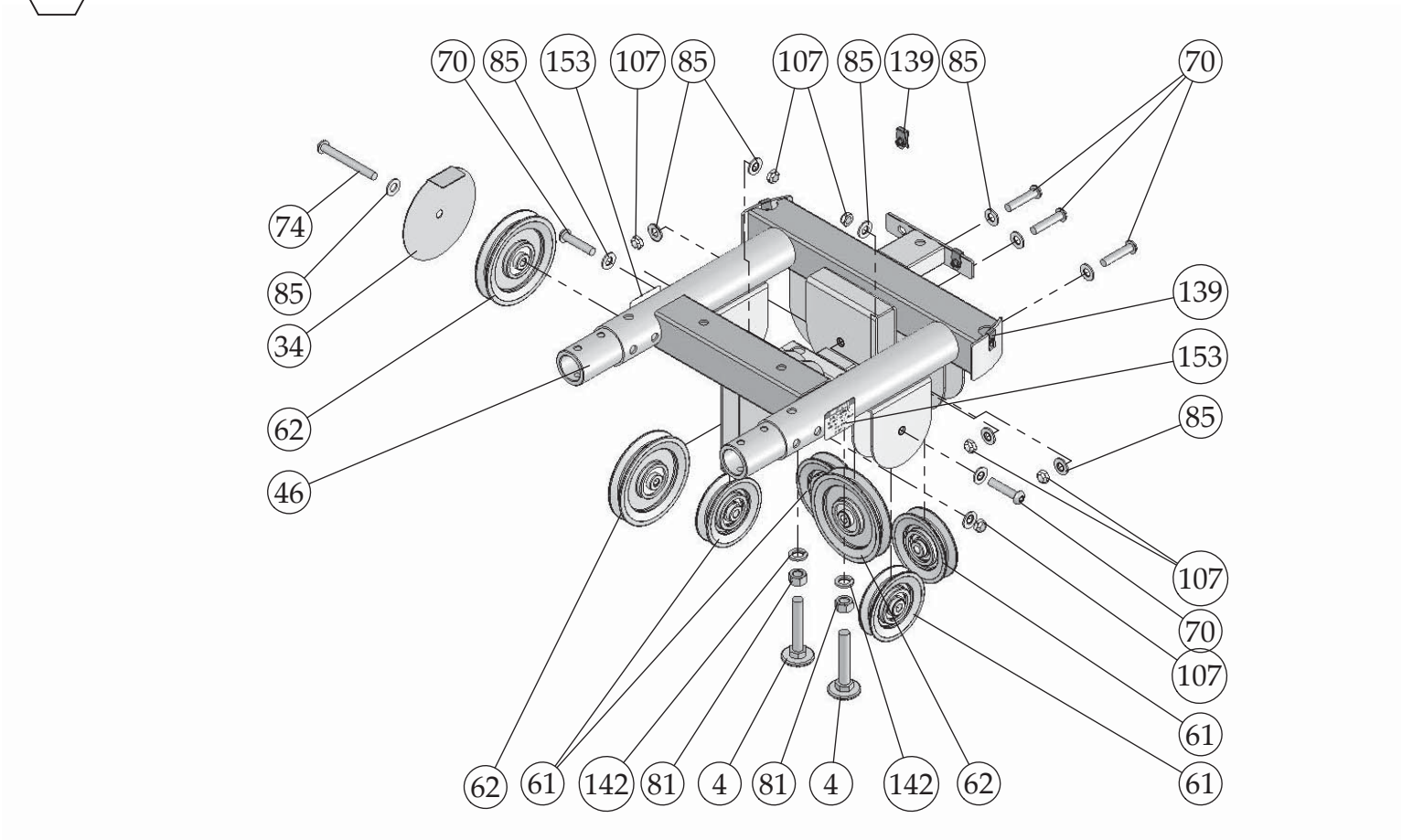

*47 UP7668X1

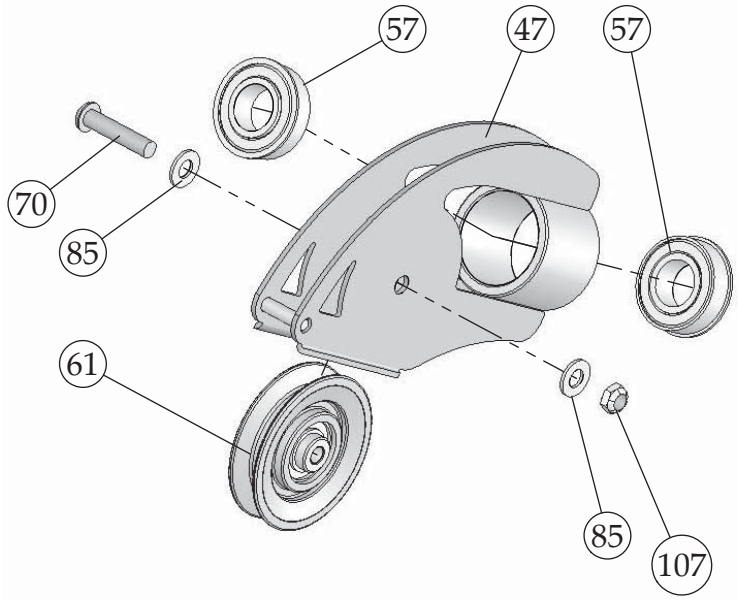

*202 UP7668X2

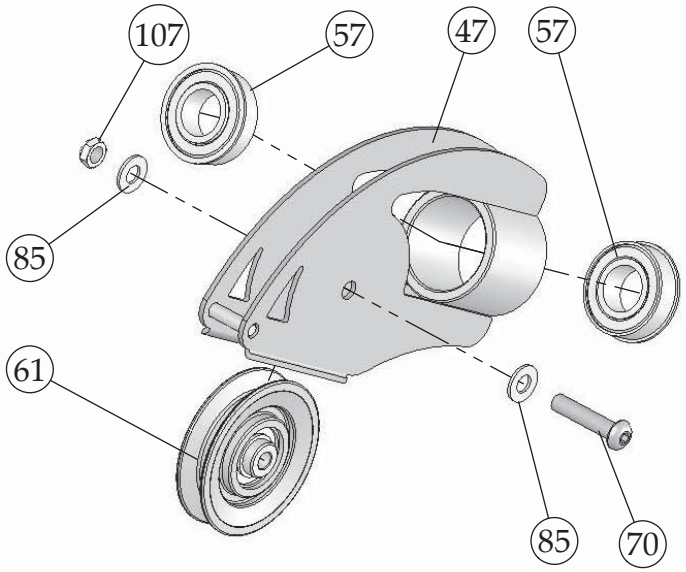

Pre Assembled Components

*25 UP7661X1

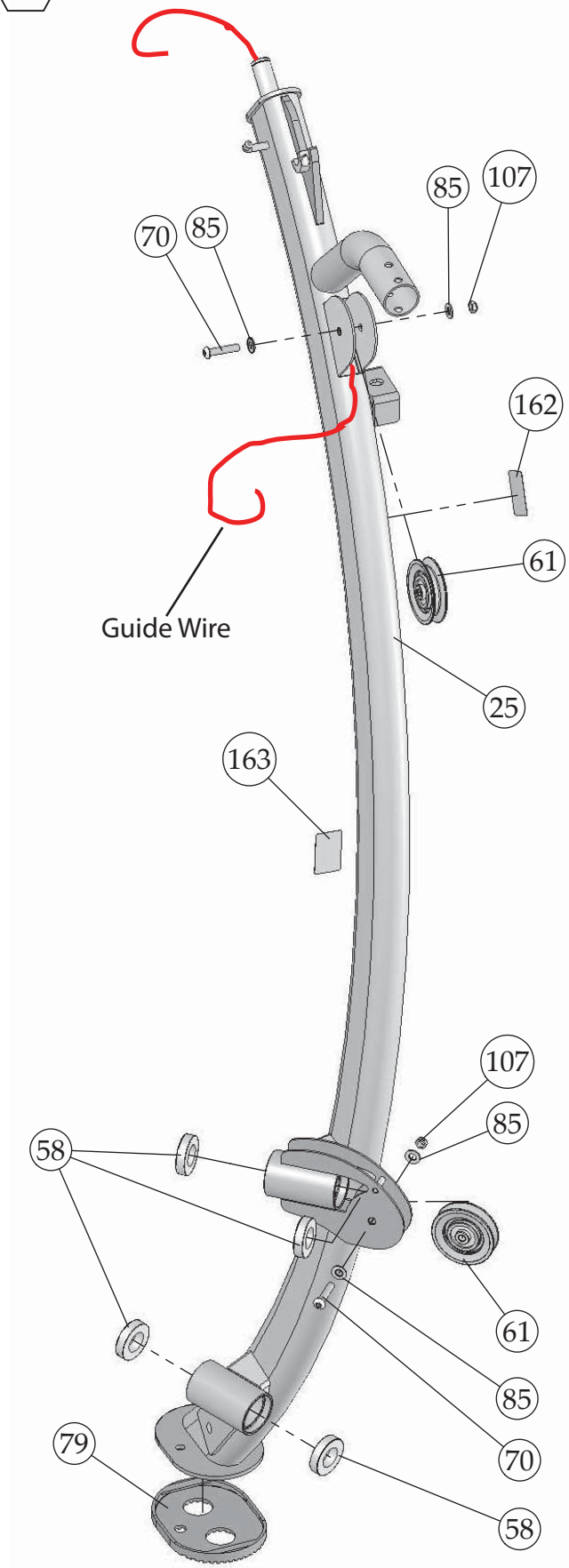

*50 UP8420X1

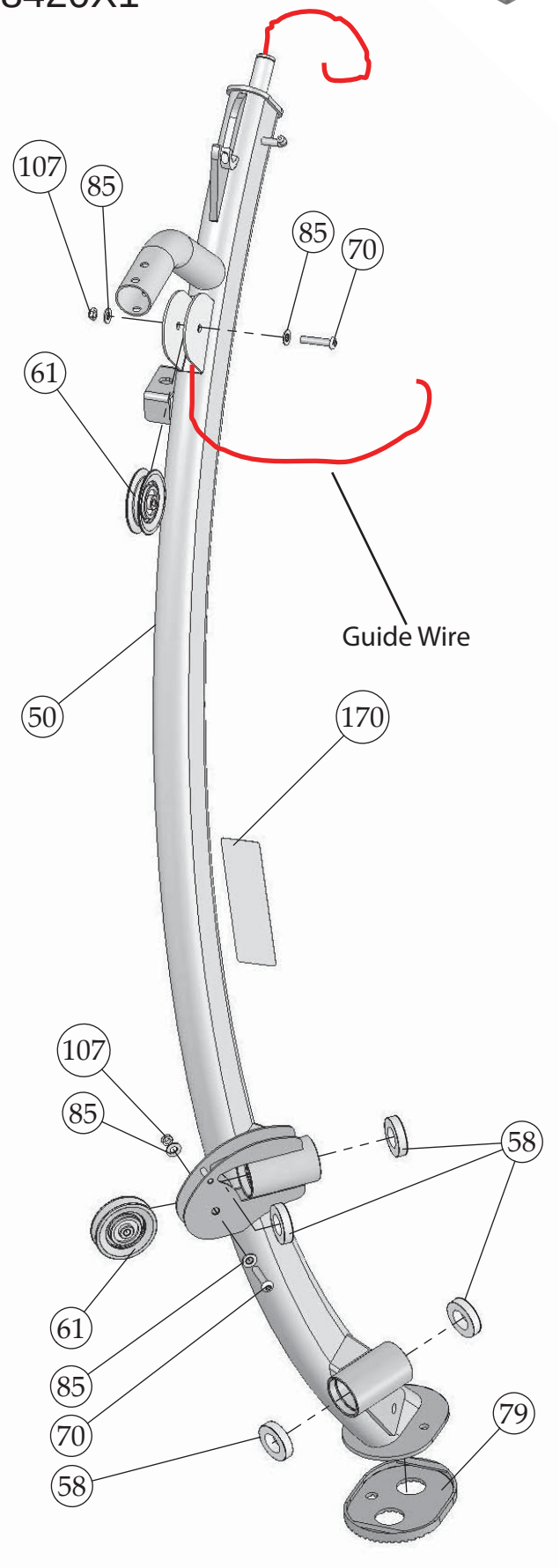

Pre Assembled Components

*48 UP7658X1

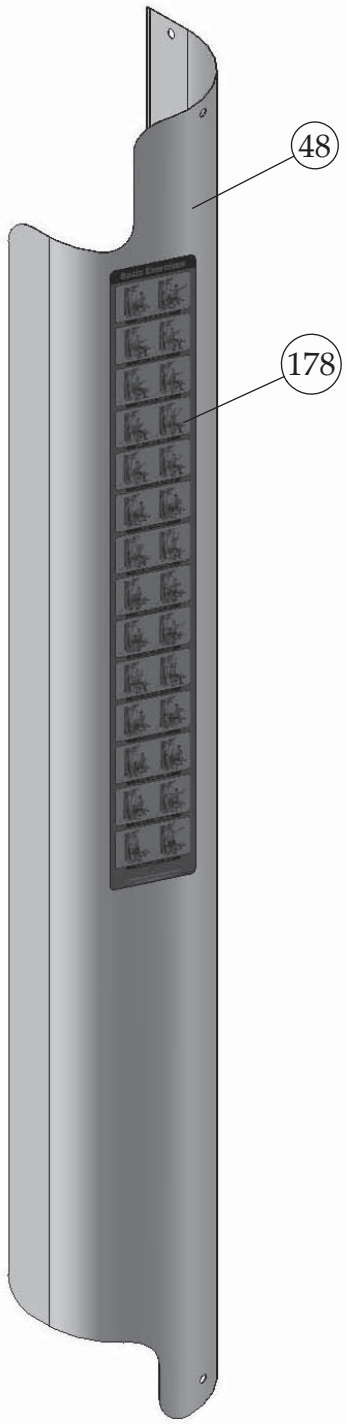

*49 UP7677X1

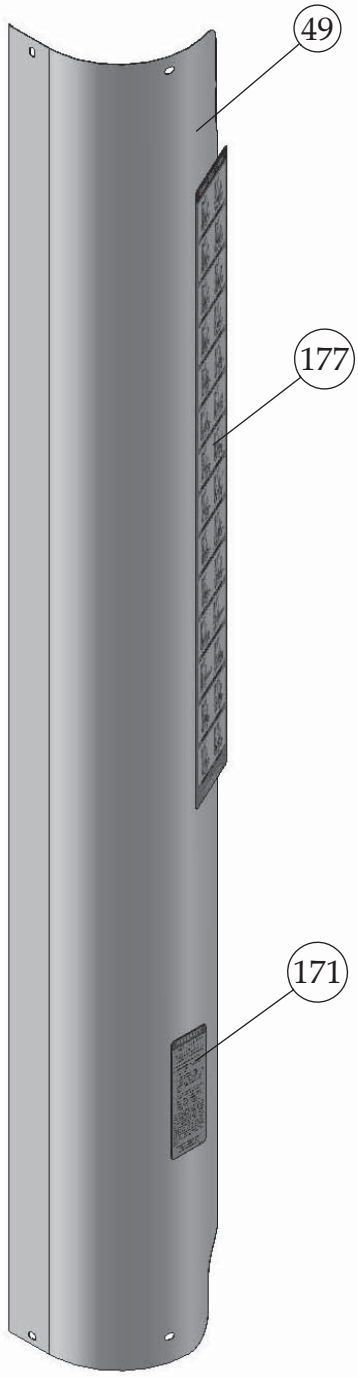

*9 UP8421X1

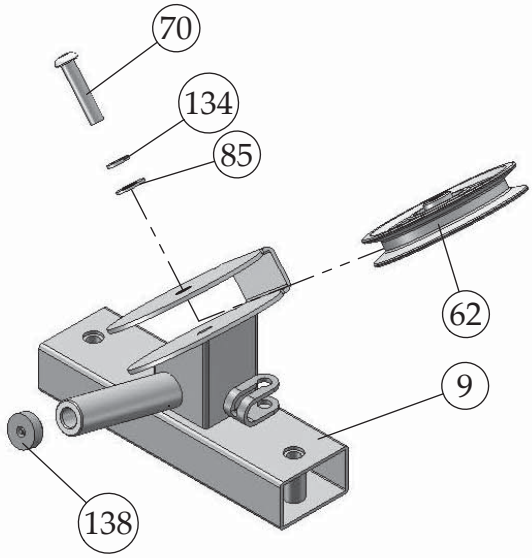

*200 UP7674X2

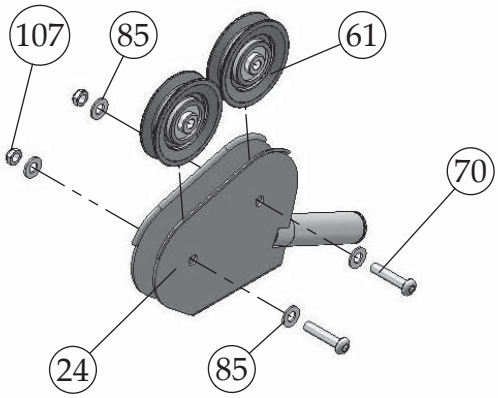

*201 UP7678X2

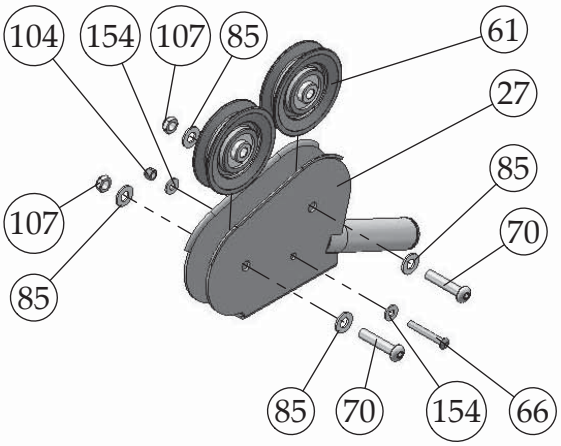

*18 UP7735X1

Pre Assembled Components

*19 UP7659X1

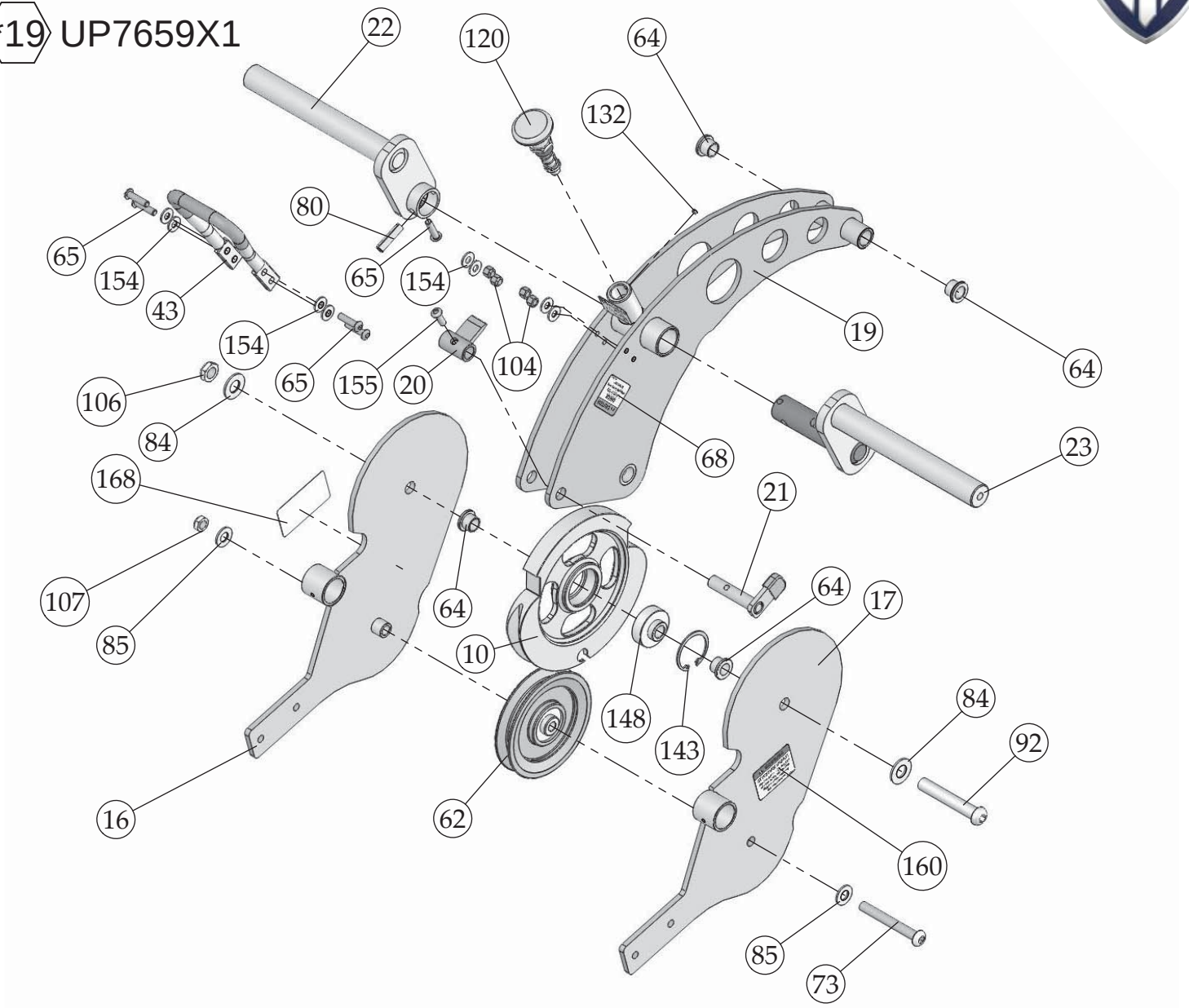

*8 UP7653X1

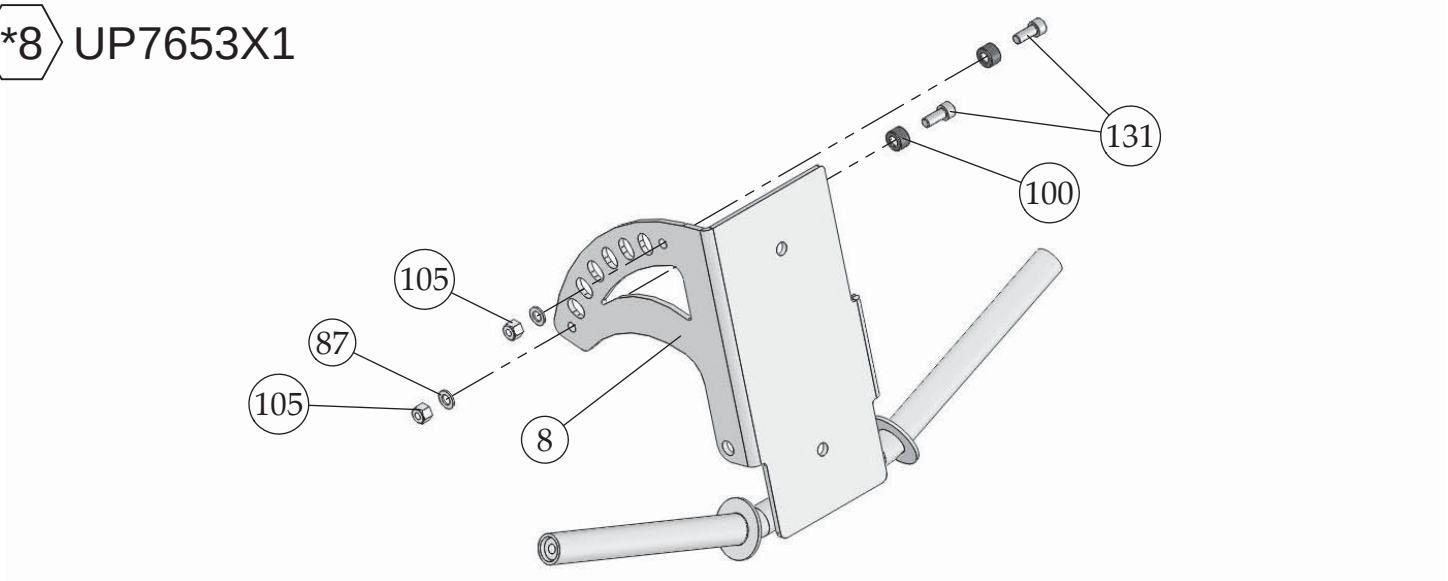

Basic Exercise Guide

Use this equipment only for the exercises as shown. Know your limitations. If you are new to weight training, always start with lighter weight, learn how to perform the exercise correctly and train at a controlled rate of speed. Warm up properly with stretchings, calisthenics or cardiovascular exercises. Never hold your breath – general rule of thumb is to exhale when you exert.

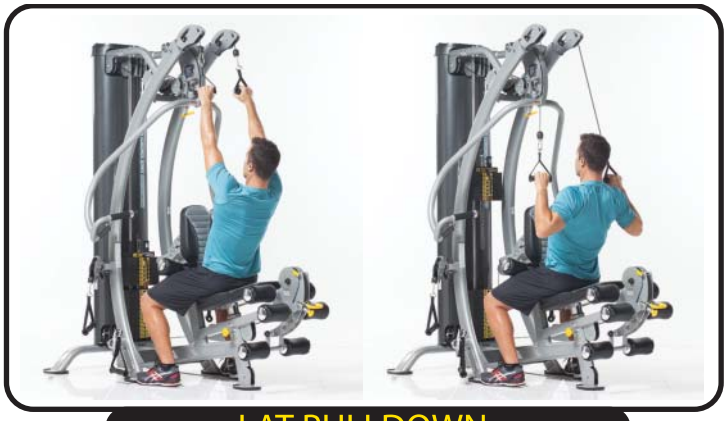

LAT PULLDOWN

ALTERNATING LAT PULLDOWN

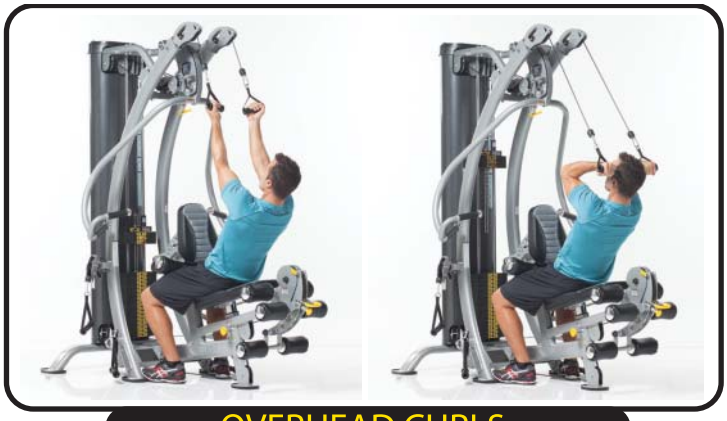

OVERHEAD CURLS

REVERSE GRIP PULLDOWN

TRICEP PRESSDOWN

ABDOMINAL CRUNCH

Basic Exercise Guide

Use this equipment only for the exercises as shown. Know your limitations. If you are new to weight training, always start with lighter weight, learn how to perform the exercise correctly and train at a controlled rate of speed. Warm up properly with stretchings, calisthenics or cardiovascular exercises. Never hold your breath – general rule of thumb is to exhale when you exert.

CHEST PRESS

INCLINE PRESS

MID ROW

LOW BACK EXTENSION

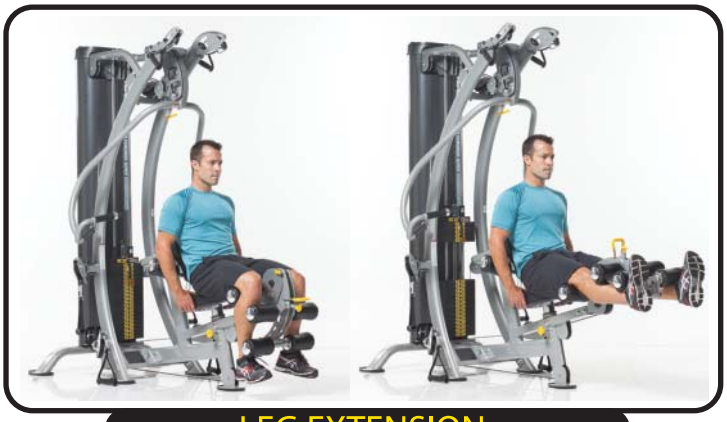

LEG EXTENSION

LEG CURL

Basic Exercise Guide

Use this equipment only for the exercises as shown. Know your limitations. If you are new to weight training, always start with lighter weight, learn how to perform the exercise correctly and train at a controlled rate of speed. Warm up properly with stretchings, calisthenics or cardiovascular exercises. Never hold your breath – general rule of thumb is to exhale when you exert.

INNER THIGH

OUTER THIGH

CABLE REAR DELT FLY

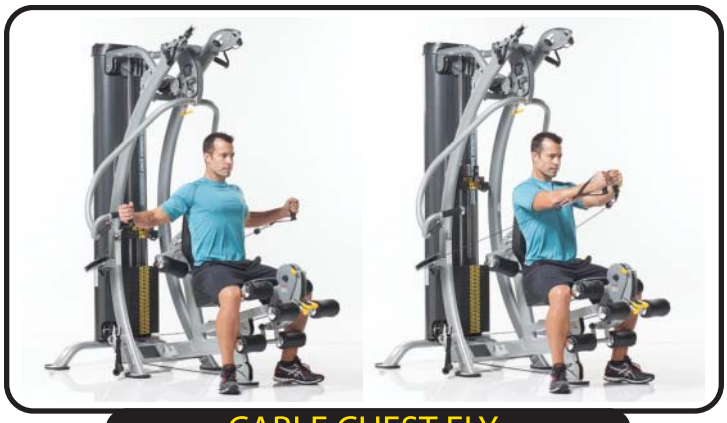

CABLE CHEST FLY

CABLE CHEST PRESS

CABLE INCLINE PRESS

Basic Exercise Guide

Use this equipment only for the exercises as shown. Know your limitations. If you are new to weight training, always start with lighter weight, learn how to perform the exercise correctly and train at a controlled rate of speed. Warm up properly with stretchings, calisthenics or cardiovascular exercises. Never hold your breath – general rule of thumb is to exhale when you exert.

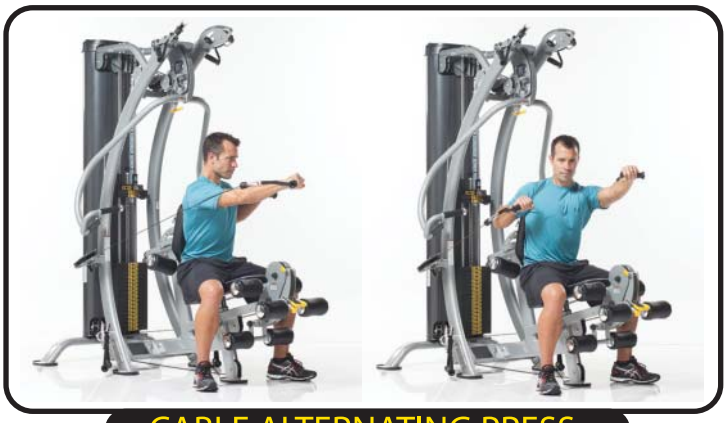

CABLE ALTERNATING PRESS

CABLE MID ROW

CABLE TRICEP EXTENSION

CABLE CORE ROTATION

CABLE SHOULDER LATERAL

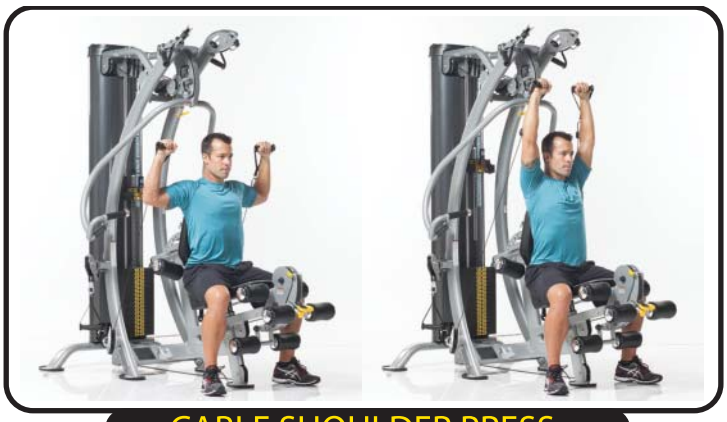

CABLE SHOULDER PRESS

Basic Exercise Guide

Use this equipment only for the exercises as shown. Know your limitations. If you are new to weight training, always start with lighter weight, learn how to perform the exercise correctly and train at a controlled rate of speed. Warm up properly with stretchings, calisthenics or cardiovascular exercises. Never hold your breath – general rule of thumb is to exhale when you exert.

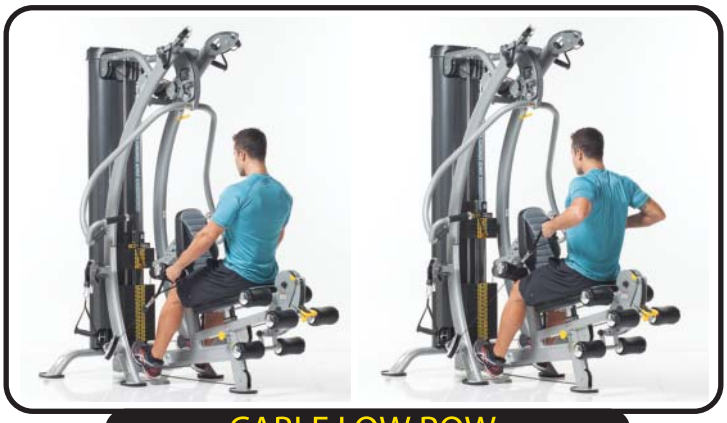

CABLE LOW ROW

SEATED CABLE CURLS

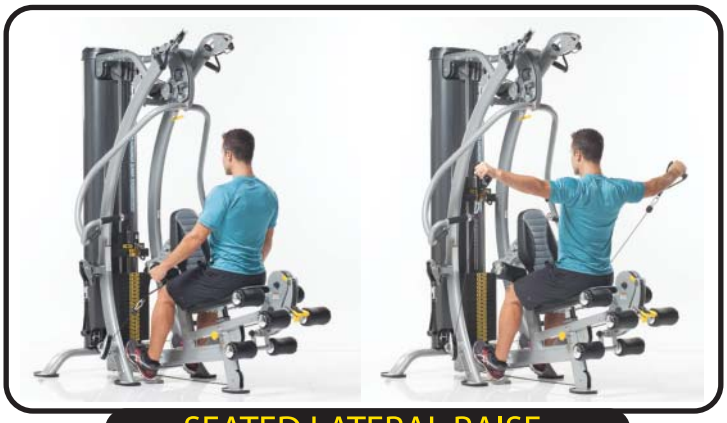

SEATED LATERAL RAISE

STANDING LATERAL RAISE

Notes

TUFFSTUFF WARRANTY

TuffStuff warrants to the original purchaser that TuffStuff equipment will be free from defects in material and workmanship. All warranty periods begin to run from the date of purchase to the original purchaser. The warranty and remedies set forth herein are conditioned upon proper storage, installation, use and maintenance and conformance with any recommendations of TuffStuff. This warranty does not cover products not manufactured by TuffStuff or products which are altered without the express written consent of TuffStuff.

HOME LIFETIME WARRANTY*:

LIFETIME of the equipment while owned by the original purchaser (applies only to defects from manufacturer only).

***This warranty does not cover:**

1. TuffStuff products sold for and used in a commercial or institutional environment.
2. Any damage, failure or loss caused by accident, misuse, neglect, abuse, improper assembly, improper maintenance, or failure to follow instructions or warnings in the owner's manual and warning labels posted on the machines.
3. Use of this apparatus in a manner for which it was not designed.
4. Original product that is altered, or the use of replacement parts and components of another manufacturer other than TuffStuff.

The obligation of TuffStuff under this warranty is limited to repairing or replacing warranted defective parts as TuffStuff may elect, at TuffStuff's facility in Chino, California, without charge to the purchaser. Purchaser is responsible for installation of repaired or replaced parts, and all transportation and insurance costs on returned or replaced equipment to and from TuffStuff's facility in Chino.

THE FOREGOING SHALL CONSTITUTE THE SOLE REMEDY OF THE PURCHASER AND THE SOLE LIABILITY OF TUFFSTUFF WITH REGARD TO WARRANTY, WHETHER EXPRESS OR IMPLIED BY OPERATION OF LAW OR OTHERWISE, INCLUDING BUT NOT LIMITED TO ANY IMPLIED WARRANTIES OF MERCHANTABILITY OR FITNESS. TUFFSTUFF SHALL IN NO EVENT BE LIABLE FOR INCIDENTAL OR CONSEQUENTIAL LOSSES, DAMAGES, OR EXPENSES IN CONNECTIONS WITH EXERCISE PRODUCTS. TUFFSTUFF'S LIABILITY HERE-UNDER IS EXPRESSLY LIMITED TO THE REPAIRS OR REPLACEMENTS OF WARRANTED DEFECTIVE PARTS.

This written warranty is the final, complete and exclusive agreement of the parties with respect to the quality or performance of the equipment and no action for breach of this written warranty or any implied warranty shall be commenced more than one (1) year after the accrual of the cause of action. No modification of this warranty or waiver of its terms shall be binding on either party unless approved in writing by an authorized representative of the party. Contact TuffStuff Fitness International, Inc. at 13971 Norton Avenue, Chino, CA 91710, before returning any defective equipment.

This warranty gives you specific legal rights and you may also have other rights, which may vary from state to state.

SERIAL # _____

Write your Serial number here for future reference

_____

Purchase Date

TuffStuff Fitness International, Inc.
13971 Norton Avenue, Chino, CA 91710, USA. Ph 909-629-1600 Fx 909-629-4967
www.tuffstuffitness.com service@tuffstuff.net or service1@tuffstuff.net