TUFFSTUFF FITNESS INTERNATIONAL

OWNER'S MANUAL

Maintenance & Assembly Instructions

IMPORTANT: KEEP THIS MANUAL FOR FUTURE REFERENCE

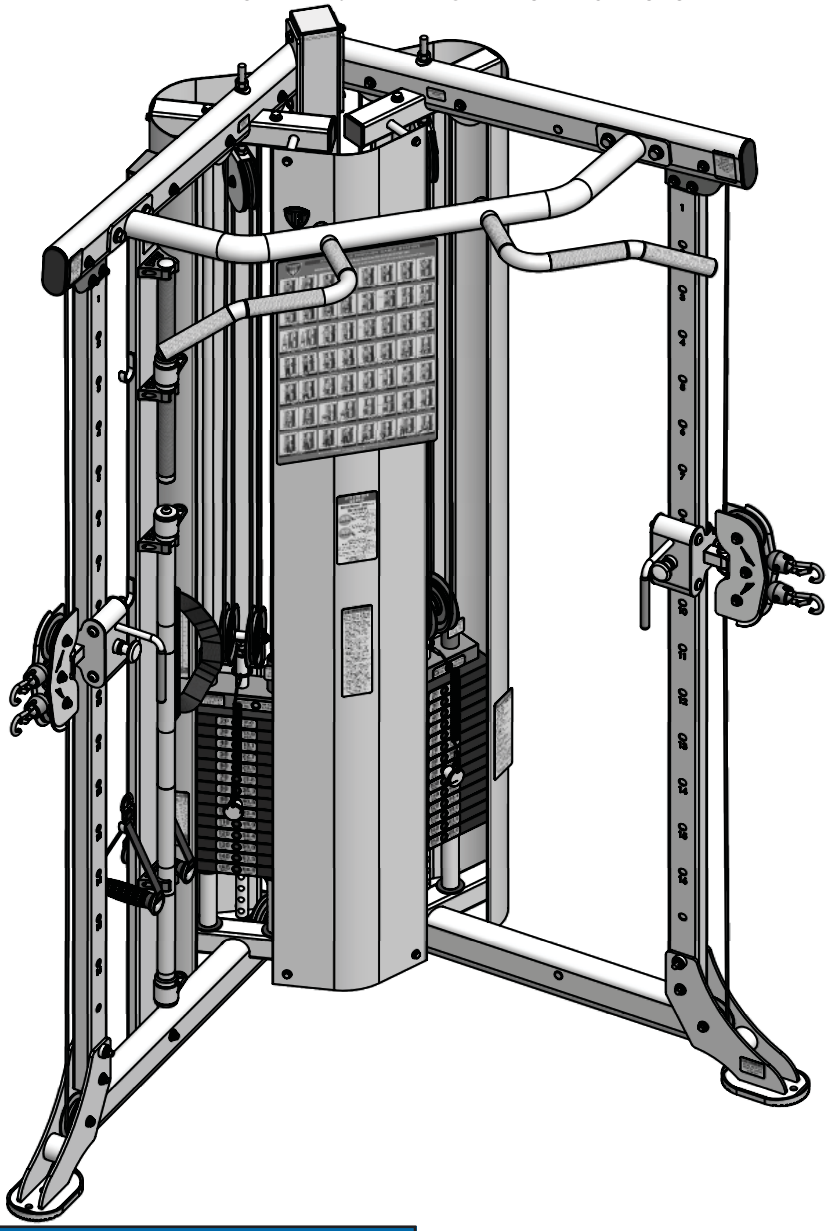

NOTICE

It is the Purchaser's/Owner's obligation:

1. To disclose and post all Rules & Regulations, Danger, Warning and Caution labels affixed on the machine to their customers/users.
2. Equipment to be installed by TFI Authorized Dealer or a service company approved by TFI.
3. Provide trained personnel, supervision and correct usage of the equipment.
4. Provide scheduled inspection, maintenance & repairs and must be performed by TFI Authorized Dealer or a service company approved by TFI.
5. Must use only genuine TuffStuff replacement parts.
6. ⚠ **WARNING** Machine must be anchored to a solid and level surface before use.

CDP-300

Dual Adjustable Pulley System W/150 lbs Weight Stacks

CDP-300_Rev0
Revision Date 08-06-2014

Table of Contents

Overhead Specifications....Page 3
DANGER, WARNING, & CAUTION Labels Information....Page 4-7
Anchoring Unit....Page 8
Important Safety Instructions....Page 9
Registration, Service & Assembly....Page 10
Inspection/Maintenance....Page 11
Cable Inspection....Page 12
Assembly Steps....Page 13-31
Parts List....Page 32-33
Pre-Assembled Components....Page 34-38
Notes....Page 39
WARRANTY....Page 40

TuffStuff Fitness International, Inc. continually engages in research related to product improvements. Please take the time to carefully read through this owner's manual thoroughly. Instructions contained in this owner's manual are not intended to cover all details or variations possible with equipment, or to cover every contingency that may be met in conjunction with assembly, installation, operation, maintenance or troubleshooting of the equipment. Even though we have prepared this owner's manual with extreme care, neither the manufacturer nor the author can accept responsibility for any errors in, or omission from, the information given. Should additional information be required, or should situations arise that are not covered by this owner's manual, the matter should be directed to Customer Service at TuffStuff Fitness International, Inc. in Chino, California.

Overhead Specifications

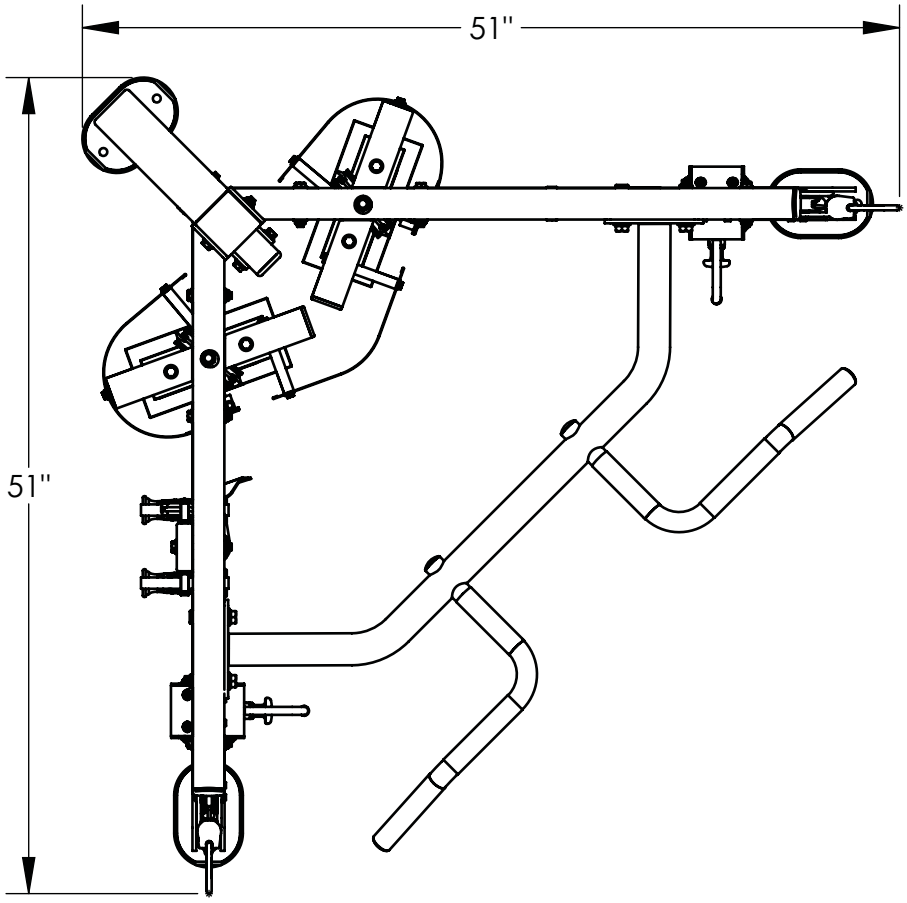

L 51" X W 51" X H 83"
PRODUCT WEIGHT 600 lbs.
MAX-LOAD WEIGHT LIMIT 300 lbs.

Carefully read ALL Danger, Warning & Caution labels posted on the machine

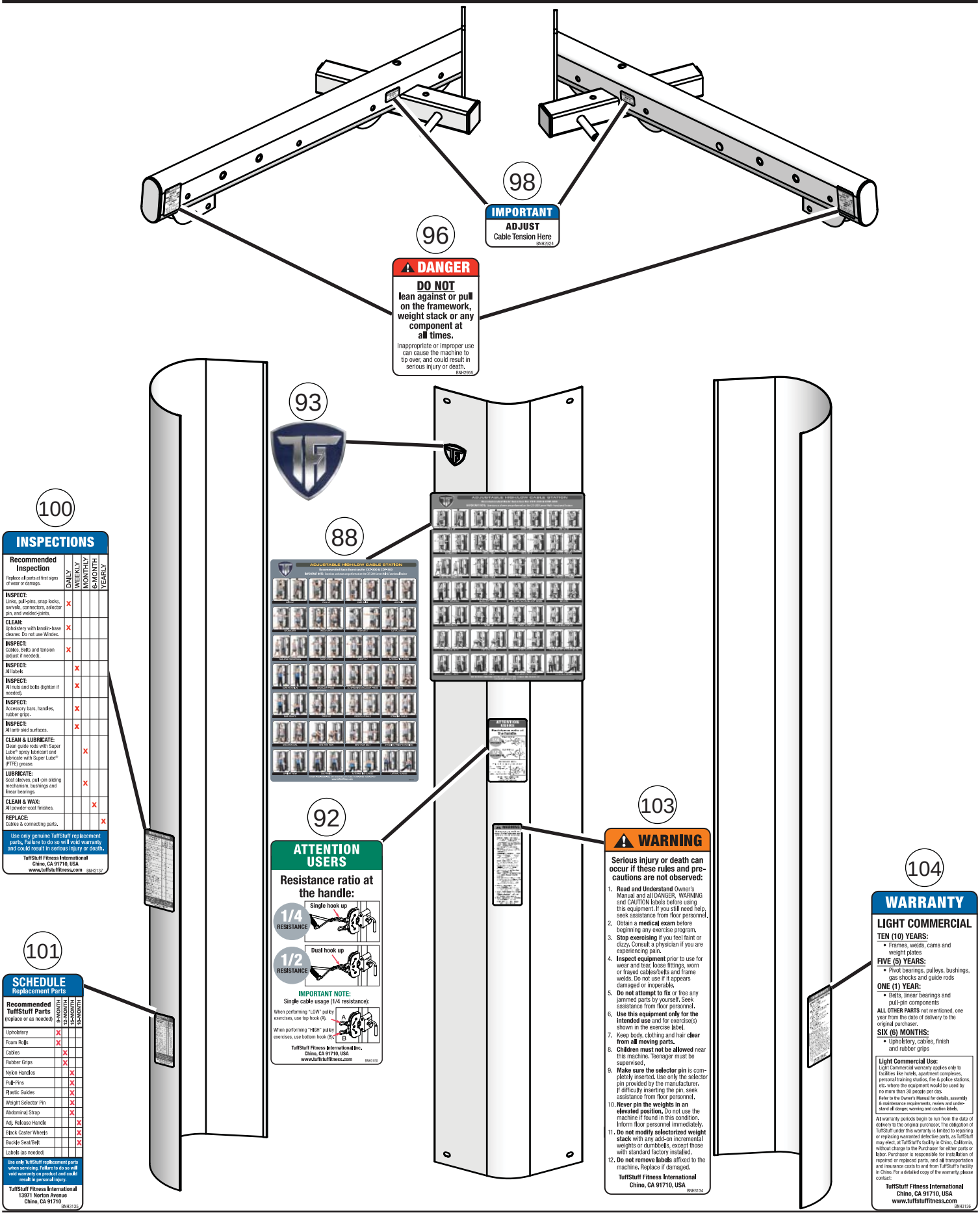

Carefully read ALL Danger, Warning & Caution labels posted on the machine

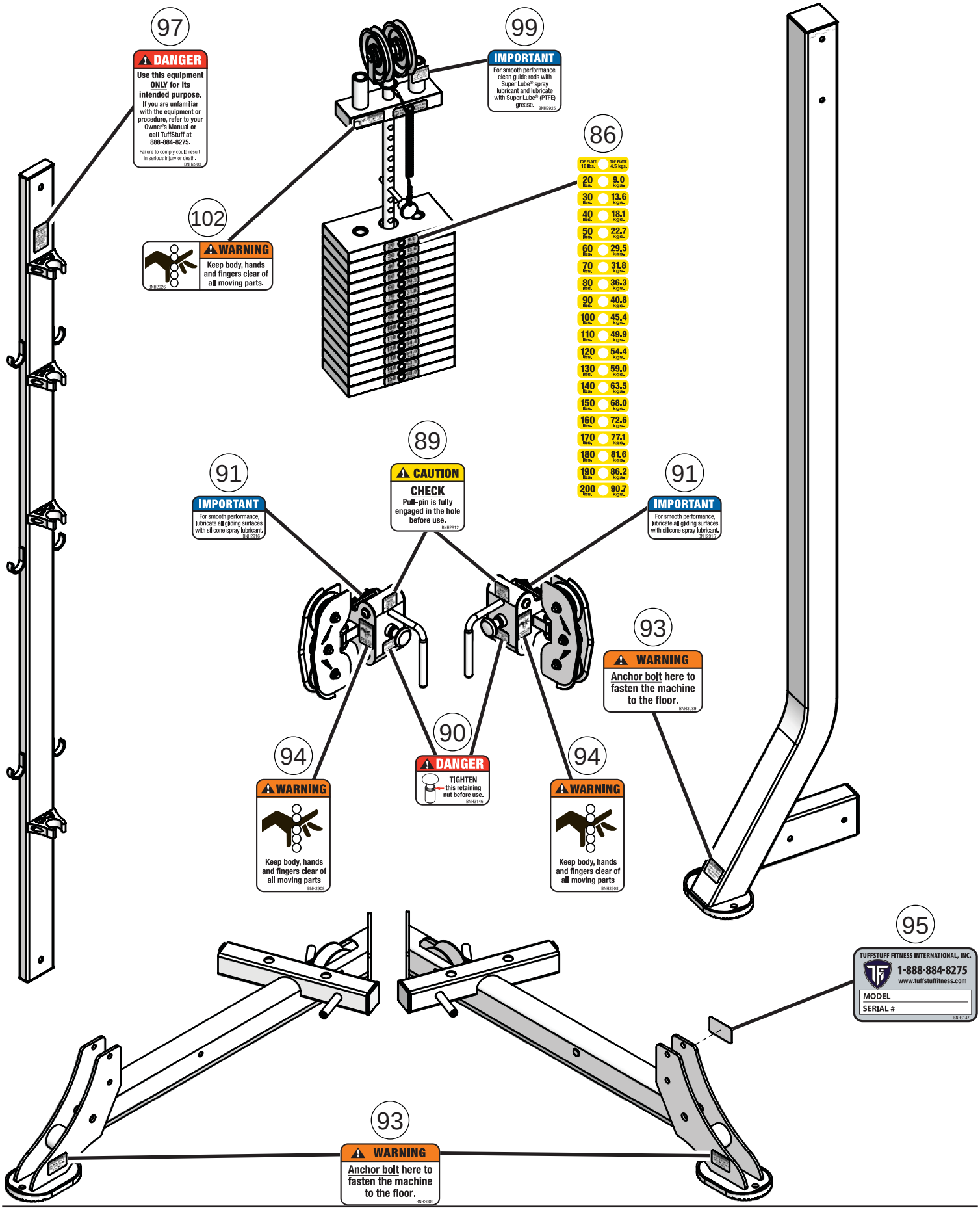

Carefully read ALL Danger, Warning & Caution labels posted on the machine

97

DANGER

Use this equipment ONLY for its intended purpose.

If you are unfamiliar with the equipment or procedure, refer to your Owner's Manual or call TuffStuff at 888-884-8275.

Failure to comply could result in serious injury or death.

BNH2903

96

DANGER

DO NOT lean against or pull on the framework, weight stack or any component at all times.

Inappropriate or improper use can cause the machine to tip over, and could result in serious injury or death.

BNH2955

90

DANGER

TIGHTEN this retaining nut before use.

BNH3146

102

WARNING

Keep body, hands and fingers clear of all moving parts.

BNH2926

103

WARNING

Serious injury or death can occur if these rules and precautions are not observed:

1. **Read and Understand** Owner's Manual and all DANGER, WARNING and CAUTION labels before using this equipment. If you still need help, seek assistance from floor personnel.
2. Obtain a **medical exam** before beginning any exercise program.
3. **Stop exercising** if you feel faint or dizzy. Consult a physician if you are experiencing pain.
4. **Inspect equipment** prior to use for wear and tear, loose fittings, worn or frayed cables/belts and frame welds. Do not use if it appears damaged or inoperable.
5. **Do not attempt to fix** or free any jammed parts by yourself. Seek assistance from floor personnel.
6. **Use this equipment only for the intended use** and for exercise(s) shown in the exercise label.
7. Keep body, clothing and hair **clear from all moving parts.**
8. **Children must not be allowed** near this machine. Teenager must be supervised.
9. **Make sure the selector pin** is completely inserted. Use only the selector pin provided by the manufacturer. If difficulty inserting the pin, seek assistance from floor personnel.
10. **Never pin the weights in an elevated position.** Do not use the machine if found in this condition. Inform floor personnel immediately.
11. **Do not modify selectorized weight stack** with any add-on incremental weights or dumbbells, except those with standard factory installed.
12. **Do not remove labels** affixed to the machine. Replace if damaged.

TuffStuff Fitness International
Chino, CA 91710, USA

BNH3134

93

WARNING

Anchor bolt here to fasten the machine to the floor.

BNH3089

94

WARNING

Keep body, hands and fingers clear of all moving parts

BNH2908

99

IMPORTANT

For smooth performance, clean guide rods with Super Lube® spray lubricant and lubricate with Super Lube® (PTFE) grease.

BNH2925

98

IMPORTANT

ADJUST
Cable Tension Here

BNH2924

91

IMPORTANT

For smooth performance, lubricate all gliding surfaces with silicone spray lubricant.

BNH2916

89

CAUTION

CHECK
Pull-pin is fully engaged in the hole before use.

BNH2912

88

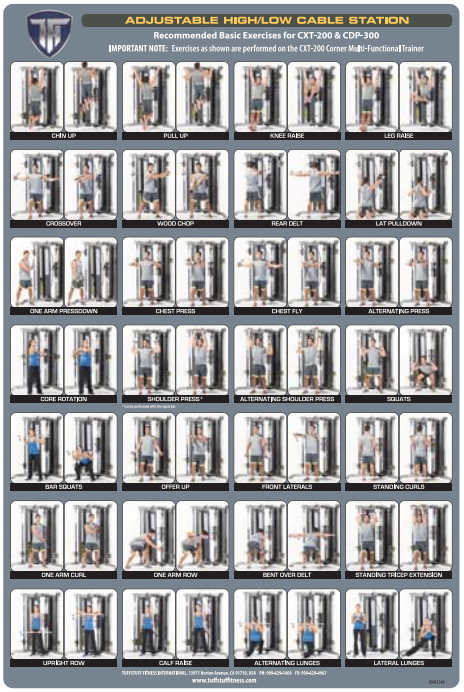

92

ATTENTION USERS

Resistance ratio at the handle:

1/4 RESISTANCE

Single hook up

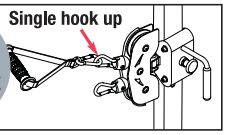

1/2 RESISTANCE

Dual hook up

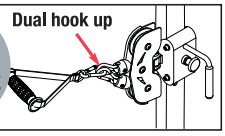

IMPORTANT NOTE:
Single cable usage (1/4 resistance):

When performing "LOW" pulley exercises, use top hook (A).

When performing "HIGH" pulley exercises, use bottom hook (B).

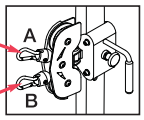

TuffStuff Fitness International Inc.
Chino, CA 91710, USA
www.tuffstuffitness.com

BNH3150

95

TUFFSTUFF FITNESS INTERNATIONAL, INC.

1-888-884-8275
www.tuffstuffitness.com

MODEL

SERIAL #

BNH3147

86

TOP PLATE 10 lbs.	TOP PLATE 4.5 kgs.
20 lbs.	9.0 kgs.
30 lbs.	13.6 kgs.
40 lbs.	18.1 kgs.
50 lbs.	22.7 kgs.
60 lbs.	29.5 kgs.
70 lbs.	31.8 kgs.
80 lbs.	36.3 kgs.
90 lbs.	40.8 kgs.
100 lbs.	45.4 kgs.
110 lbs.	49.9 kgs.
120 lbs.	54.4 kgs.
130 lbs.	59.0 kgs.
140 lbs.	63.5 kgs.
150 lbs.	68.0 kgs.
160 lbs.	72.6 kgs.
170 lbs.	77.1 kgs.
180 lbs.	81.6 kgs.
190 lbs.	86.2 kgs.
200 lbs.	90.7 kgs.

101

SCHEDULE
Replacement Parts

Recommended TuffStuff Parts (replace or as needed)	9-MONTH	12-MONTH	15-MONTH	18-MONTH
Upholstery	X			
Foam Rolls	X			
Cables		X		
Rubber Grips		X		
Nylon Handles			X	
Pull-Pins			X	
Plastic Guides			X	
Weight Selector Pin			X	
Abdominal Strap			X	
Adj. Release Handle				X
Black Caster Wheels				X
Buckle Seat/Belt				X
Labels (as needed)				

Use only TuffStuff replacement parts when servicing. Failure to do so will void warranty on product and could result in personal injury.

TuffStuff Fitness International
13971 Norton Avenue
Chino, CA 91710

BNH3135

104

WARRANTY

LIGHT COMMERCIAL

TEN (10) YEARS:

- Frames, welds, cams and weight plates

FIVE (5) YEARS:

- Pivot bearings, pulleys, bushings, gas shocks and guide rods

ONE (1) YEAR:

- Belts, linear bearings and pull-pin components

ALL OTHER PARTS not mentioned, one year from the date of delivery to the original purchaser.

SIX (6) MONTHS:

- Upholstery, cables, finish and rubber grips

Light Commercial Use:
Light Commercial warranty applies only to facilities like hotels, apartment complexes, personal training studios, fire & police stations, etc. where the equipment would be used by no more than 30 people per day.

Refer to the Owner's Manual for details, assembly & maintenance requirements, review and understand all danger, warning and caution labels.

All warranty periods begin to run from the date of delivery to the original purchaser. The obligation of TuffStuff under this warranty is limited to repairing or replacing warranted defective parts, as TuffStuff may elect, at TuffStuff's facility in Chino, California, without charge to the Purchaser for either parts or labor. Purchaser is responsible for installation of repaired or replaced parts, and all transportation and insurance costs to and from TuffStuff's facility in Chino. For a detailed copy of the warranty, please contact:

TuffStuff Fitness International
Chino, CA 91710, USA
www.tuffstuffitness.com

BNH3136

100

INSPECTIONS

Recommended Inspection Replace all parts at first signs of wear or damage.	DAILY	WEEKLY	MONTHLY	6-MONTH	YEARLY
INSPECT: Links, pull-pins, snap locks, swivels, connectors, selector pin, and welded-joints.	X				
CLEAN: Upholstery with lanolin-base cleaner. Do not use Windex.	X				
INSPECT: Cables, Belts and tension (adjust if needed).	X				
INSPECT: All labels		X			
INSPECT: All nuts and bolts (tighten if needed).		X			
INSPECT: Accessory bars, handles, rubber grips.		X			
INSPECT: All anti-skid surfaces.		X			
CLEAN & LUBRICATE: Clean guide rods with Super Lube® spray lubricant and lubricate with Super Lube® (PTFE) grease.			X		
LUBRICATE: Seat sleeves, pull-pin sliding mechanism, bushings and linear bearings.			X		
CLEAN & WAX: All powder-coat finishes.				X	
REPLACE: Cables & connecting parts.					X

Use only genuine TuffStuff replacement parts. Failure to do so will void warranty and could result in serious injury or death.

TuffStuff Fitness International
Chino, CA 91710, USA
www.tuffstuffitness.com BNH3137

87

BE ALERT!

THE FITNESS EQUIPMENT IN THIS FACILITY PRESENTS HAZARDS WHICH, IF NOT AVOIDED, COULD CAUSE SERIOUS INJURY OR DEATH.

Prior to using the equipment, READ the warning labels and instruction placards affixed to each machine.

If you are unsure on how to use a machine, seek the assistance of our floor personnel. We will be happy to instruct you on how to use the equipment properly.

Immediately report any piece of equipment that is not functioning properly to our floor personnel so that it may be evaluated and service promptly.

DO NOT ATTEMPT to use or fix any piece of equipment that is not functioning properly.

ASTM F1749-96 TUFFSTUFF FITNESS INTERNATIONAL, CHINO, CA 91710

BNH3138

93

It is extremely important that the **BE ALERT!** (87) Sign shown to the left be installed in plain view of the unit.

You should have received it along with this Owners Manual. If you did not receive this Sign with your order, you can obtain one at no cost to you from TuffStuff Fitness by contacting our service department at:

1 (888) 884-8275
service@tuffstuff.net
service1@tuffstuff.net

Anchoring Unit

Holes on footplates are provided for anchoring the unit to the floor. (See anchoring hole locations below)

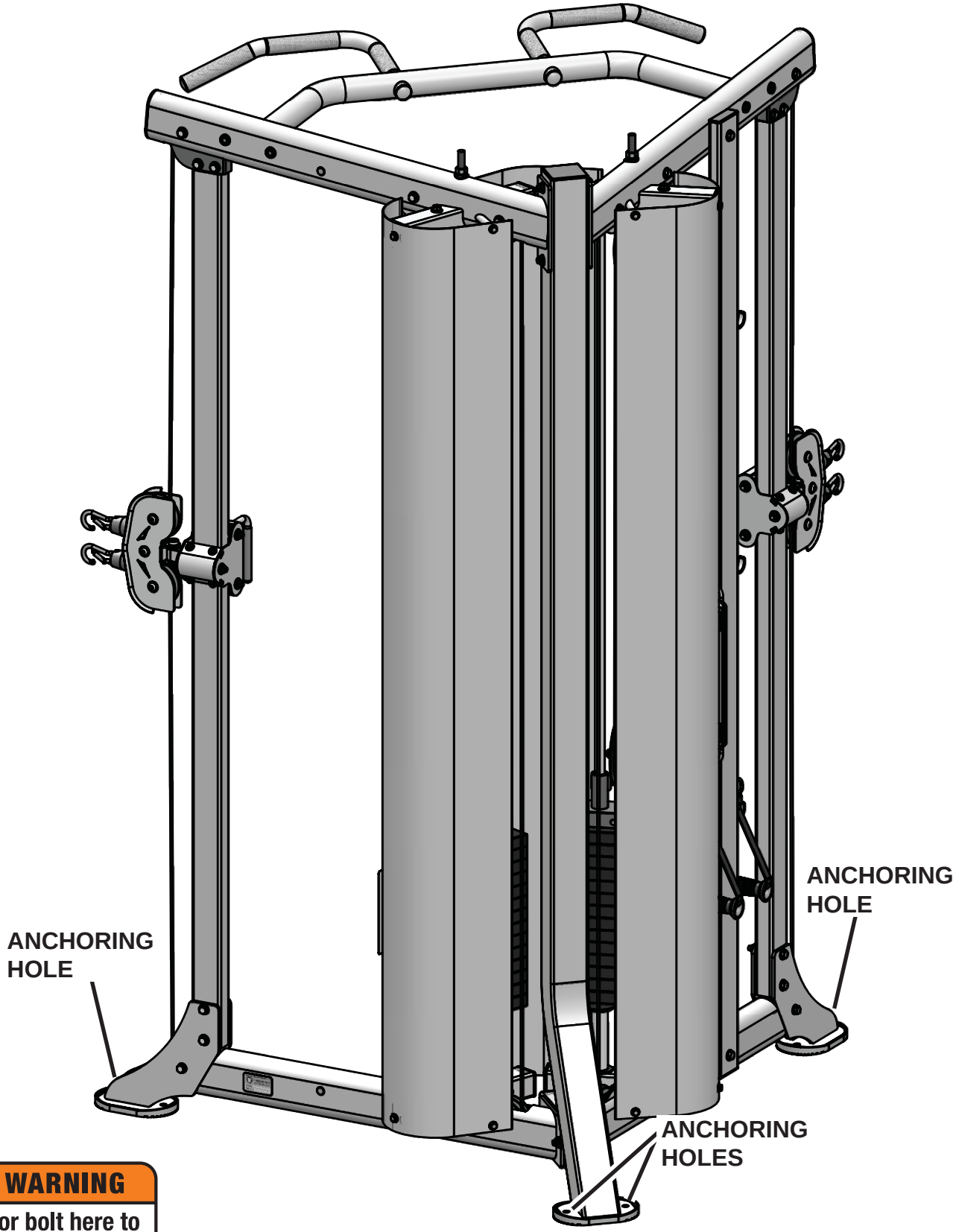

WARNING

Anchor bolt here to fasten the machine to the floor.

BNH3089

Important Safety Instructions

It is the responsibility of the facility owner and/or owner of the equipment to review the Owner's Manual with their facility personnel and understand all Danger, Warning and Caution labels affixed on the machine. It is the responsibility of the floor personnel to instruct users on proper operation of the equipment and review all danger, warning and caution labels.

⚠ WARNING SERIOUS INJURY OR DEATH CAN OCCUR IF THESE SAFETY PRECAUTIONS ARE NOT OBSERVED:

1. Obtain a medical exam before beginning any exercise program.
2. Read and understand Owner's Manual and all **Danger, Warning and Caution** labels before using this equipment. If you still need help, seek assistance from floor personnel.
3. **Inspect the equipment** before each use for wear and tear, loose fittings, worn or frayed cables and frame welds. DO NOT USE if it appears to be inoperable or damaged.
4. Stop exercising if you feel faint or dizzy. Consult a physician if you are experiencing pain.
5. **Use this equipment only for the intended use.**
6. Keep body, clothing and hair clear from all moving parts. Do not attempt to free any jammed parts by yourself.
7. Always warm-up before and cool-down after weight training. Warm-up for 10-15 minutes with stretching and cardiovascular exercises. Cool-down should include light stretching exercises for 5-15 minutes.
8. Never hold your breath – will limit the flow of oxygen to your brain and may cause dizziness. The most often used breathing pattern is inhaling during least resistance and exhaling during maximum resistance.
9. Do not use accessories or accessory attachments that are not recommended by TFI.
10. Make sure selector pin is completely inserted. Use only the selector pin provided by the manufacturer.
11. Never pin the weights in an elevated position. Do not use the machine if found in this condition.

Facility Safety Guidelines and Practices

1. Read and understand the Owner's Manual before assembling, servicing or using the equipment.
2. Equipment to be installed by TFI Authorized Dealer or Professional Service Company approved by TFI.
3. Make sure each machine is set up and operated on a solid level surface. Do not install equipment on an uneven surface.
4. Provide an adequate safety perimeter between the machine, walls and other equipment to ensure that the facility has proper clearance for usage and training.
5. Post and disclose all safety, rules and regulations on a bulletin board easily accessible to users.
6. **Anchoring of equipment must be completed** at time of installation and inspected prior to use. Failure to anchor the machine to the floor could cause the machine to tip or fall over due to incorrect usage and misuse, and could result in serious injury or death.
7. Perform regular maintenance (see Inspection Label). Pay special attention to areas most susceptible to wear and tear, including but not limited to cables, pulleys and rubber grips.
8. **Do not** lean against or pull on the framework, weight stack or any component at all times.
9. **Children must not** be allowed near the equipment. Teenager must be supervised.
10. Replace immediately all parts at first sign of wear or damage. If unable to replace worn or damaged components/parts, remove machine from service until the repair is made.
11. Use only genuine TuffStuff replacement parts. Failure to do so will void warranty and could result in serious injury or death to the users.
12. **Do not remove** any decals affixed to the machine. Replace if damaged.
13. **Do not alter or modify** the original manufacturer's weight stack with any add-on incremental weights, weight plates or dumbbells except those with standard factory installed option.
14. Maintain a service contract with a TFI Authorized Dealer or a Professional Service Company approved by TFI. Keep a service log of all maintenance and repair activities. NOTICE: It is the sole responsibility of the owner or facility operator to ensure that regular maintenance is performed.

⚠ DANGER

DANGER: indicates an imminently hazardous situation which, if not avoided, will result in death or serious injury.

⚠ WARNING

WARNING: indicates a potentially hazardous situation which, if not avoided, will result in death or serious injury.

⚠ CAUTION

CAUTION: indicates a hazardous situation which, if not avoided, could result in minor or moderate injury.

Registration, Service & Assembly

Thank you for purchasing the CDP-300 Dual Adjustable Pulley System W/150 lbs Weight Stacks. This machine is part of the TuffStuff line of quality strength training equipment. To maximize your use of the equipment, please study the Owner's Manual thoroughly.

Registration

To avoid unnecessary delays on warranty parts and to insure that a permanent record of your purchase is on file with our company, be sure to register online at:

http://www.tuffstuffitness.com

or mail to address shown below within 10 days of purchase.

Obtaining Service

Please use this Owner's Manual as your guide to all parts included in your shipment. When ordering parts, you must specify the part number and description from this manual. **Use only genuine TuffStuff replacement parts when servicing the equipment.** Failure to do so will void warranty and could result in serious injury or death.

For information about product operation or service:

Phone:	909-629-1600 Toll Free 888-884-8275
Fax:	909-629-4967
E-mail:	service@tuffstuff.net or service1@tuffstuff.net
Hours:	M–F 8:00 – 4:30 PST
Or write to:	TuffStuff Fitness International, Inc. Customer Service 13971 Norton Avenue, Chino, CA 91710

Retain this Owner's Manual for future reference when ordering service or parts. To assist you better, please be prepared to provide the following information:

1. Model Number **2. Place of Purchase**
3. Serial Number **4. Part # and Description**

Required Tools

The basic tools that you will need to assemble the CDP-300 but are not limited to:

- 7/16", 9/16", 3/4" Combination Wrenches
- Ratchet Wrench with 7/16", 9/16", 3/4" sockets
- Crescent Adjustable Wrench
- Phillips Screwdriver
- Rubber mallet, measuring tape & utility knife
- Super Lube® spray lubricant and grease
- Windex or household glass cleaner

Assembly Requirements

Follow these installation requirements when assembling the CDP-300. Use the overhead view on the Content Page to layout your floor plan before assembling.

Set up the CDP-300 on a clean, solid, flat surface. A smooth, flat surface under the machine helps keep it level.

Allow ample space around the machine for safe unrestricted use and easier access.

Insert all bolts in the same direction. For aesthetic appearance, insert all bolts in the same direction unless specified (in text or illustration) to do otherwise.

Leave room for adjustments. Do not fully tighten fasteners until instructed in the assembly steps to do so (to prevent any difficulty with alignment of parts during the assembly process). When not instructed, tighten fasteners such as bolts, nuts and screws so the unit is stable, but leave room for adjustments.

Assembly Tips

Read all "Notes" on each page before beginning each step.

While you may be able to assemble the CDP-300 using the illustrations only, IMPORTANT safety notes and other tips are included in the text.

Some pieces may have extra holes that you will not use. Use only those holes indicated in the instructions and illustration.

NOTE: With so many assembled parts, proper alignment and adjustment is critical. While tightening the nuts and bolts, be sure to leave room for final adjustments.

CAUTION: Obtain assistance from TuffStuff if you have difficulty assembling the CDP-300. Please do not attempt to complete the assembly as this could result in equipment failure and serious injuries to the users.

Symbols & Description

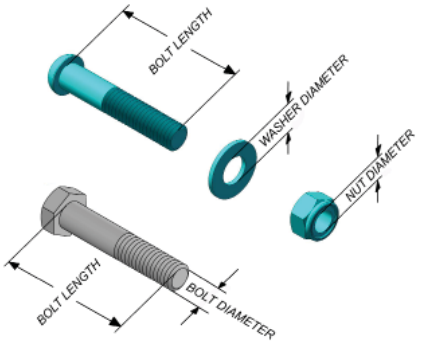

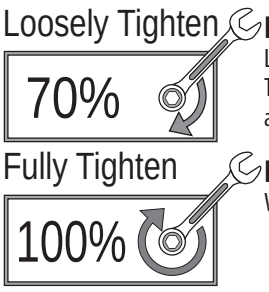

Loosely Tighten
Loosely tighten all hardware in this step. DO NOT Fully Tighten. Some component(s) may need pre-assembly and or alignment during the assembly process.

Fully Tighten
Wrench tighten all hardware in this step.

Inspection/Maintenance

Perform regular maintenance (see Inspection Label). Pay special attention to areas most susceptible to wear and tear, including but not limited to cables, pulleys and rubber grip. TFI recommends you maintain a service contract with a TFI Authorized Dealer or a Professional Service Company approved by TFI. Keep a service log of all maintenance and repair activities. Extra copies can be downloaded from our website www.tuffstuffitness.com

INSPECTIONS

Recommended Inspection Replace all parts at first signs of wear or damage.	DAILY	WEEKLY	MONTHLY	6-MONTH	YEARLY
INSPECT: Links, pull-pins, snap locks, swivels, connectors, selector pin, and welded-joints.	X				
CLEAN: Upholstery with lanolin-base cleaner. Do not use Windex.	X				
INSPECT: Cables, Belts and tension (adjust if needed).	X				
INSPECT: All labels		X			
INSPECT: All nuts and bolts (tighten if needed).		X			
INSPECT: Accessory bars, handles, rubber grips.		X			
INSPECT: All anti-skid surfaces.		X			
CLEAN & LUBRICATE: Clean guide rods with Super Lube® spray lubricant and lubricate with Super Lube® (PTFE) grease.			X		
LUBRICATE: Seat sleeves, pull-pin sliding mechanism, bushings and linear bearings.			X		
CLEAN & WAX: All powder-coat finishes.				X	
REPLACE: Cables & connecting parts.					X

Use only genuine TuffStuff replacement parts. Failure to do so will void warranty and could result in serious injury or death.

TuffStuff Fitness International
Chino, CA 91710, USA
www.tuffstuffitness.com BNH3137

INSPECTION / MAINTENANCE RECORDS

DATE	REPLACEMENT	REPAIRS	INSPECTED BY

WARRANTY REPAIRS

DATE	REPLACEMENT	REPAIRS	INSPECTED BY

Cable Inspection

WARNING:

THE FOLLOWING CONDITIONS MAY INDICATE A WORN CABLE. REPLACE IMMEDIATELY.

"NECKING", STRECHED CABLE COVERING

A CRACK IN THE CABLE COVER

A TEAR IN THE CABLE COVER

A BREAK ON THE CABLE

CABLE END SLIPPING OUT

IMPORTANT NOTE:

DAMAGED OR WORNED CABLE (AS SHOWN ABOVE) MAY DAMAGE THE PULLEY(S). YOU MUST INSPECT THE PULLEYS AT THIS TIME FOR WEAR AND TEAR. REPLACE IF NEEDED.

Step 1

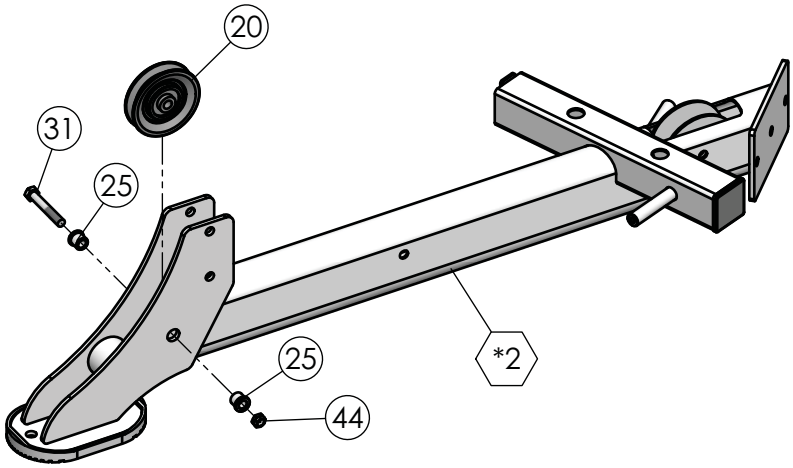

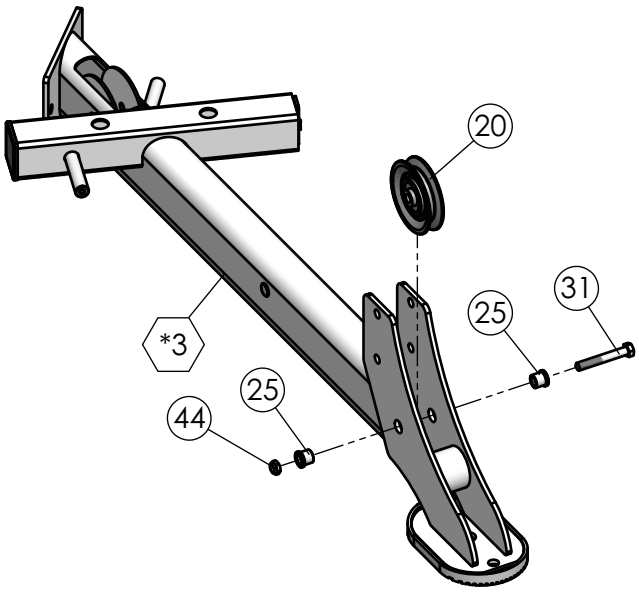

Fully Tighten

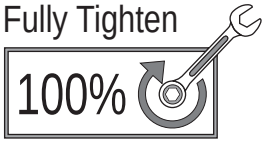

Wrench tighten all hardware in this step.

Step 1 Assembly List		
Item	**Qty.**	**Description**
20	2	BLACK NYLON PULLEY WIDE GROOVE 3/8 X 1 X 3 1/2
25	4	FLANGED SPACER Z/P 3/8 X 16.5MM
31	2	HEX HEAD CAP SCREW GR-5 Z/P 3/8-16 X 2 9/16
44	2	NYLON INSERT THIN PATTERN LOCK NUT Z/P 3/8-16
***2**	**1**	**BASE FRAME, LEFT SIDE ASSEMBLY**
***3**	**1**	**BASE FRAME, RIGHT SIDE ASSEMBLY**

Step 2

Step 2 Assembly List		
Item	**Qty.**	**Description**
29	2	HEX HEAD CAP SCREW GR-5 Z/P 3/8-16 X 1
34	1	HEX HEAD CAP SCREW GR-5 Z/P 3/8-16 X 3
39	2	SPLIT LOCK WASHER Z/P 3/8"
43	4	FLAT WASHER SAE Z/P 3/8"
44	1	NYLON INSERT THIN PATTERN LOCK NUT Z/P 3/8-16
***1**	**1**	**REAR UPRIGHT ASSEMBLY**
***2**	**1**	**BASE FRAME, LEFT SIDE ASSEMBLY**
***3**	**1**	**BASE FRAME, RIGHT SIDE ASSEMBLY**

Note:

It is strongly recommended that two people participate in this assembly step.

Loosely Tighten

70%

Loosely tighten all hardware in this step. DO NOT Fully Tighten. Some component(s) may need pre-assembly and or alignment during the assembly process.

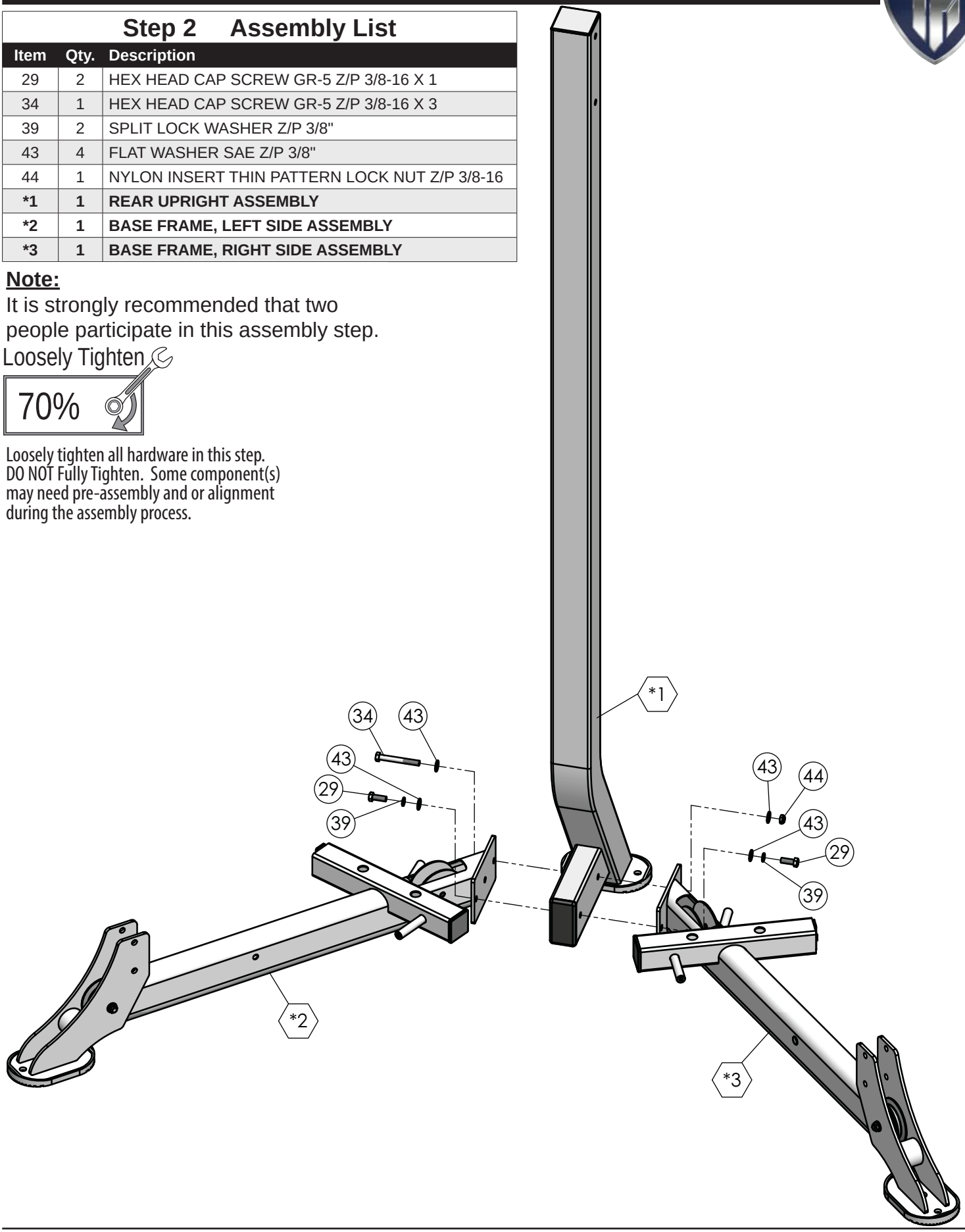

Step 3

Step 3 Assembly List		
Item	**Qty.**	**Description**
4	2	SELECTOR POST
*13	1	CARRIAGE RT
*14	1	CARRIAGE LT

Note:
It is strongly recommended that two people participate in this assembly step.

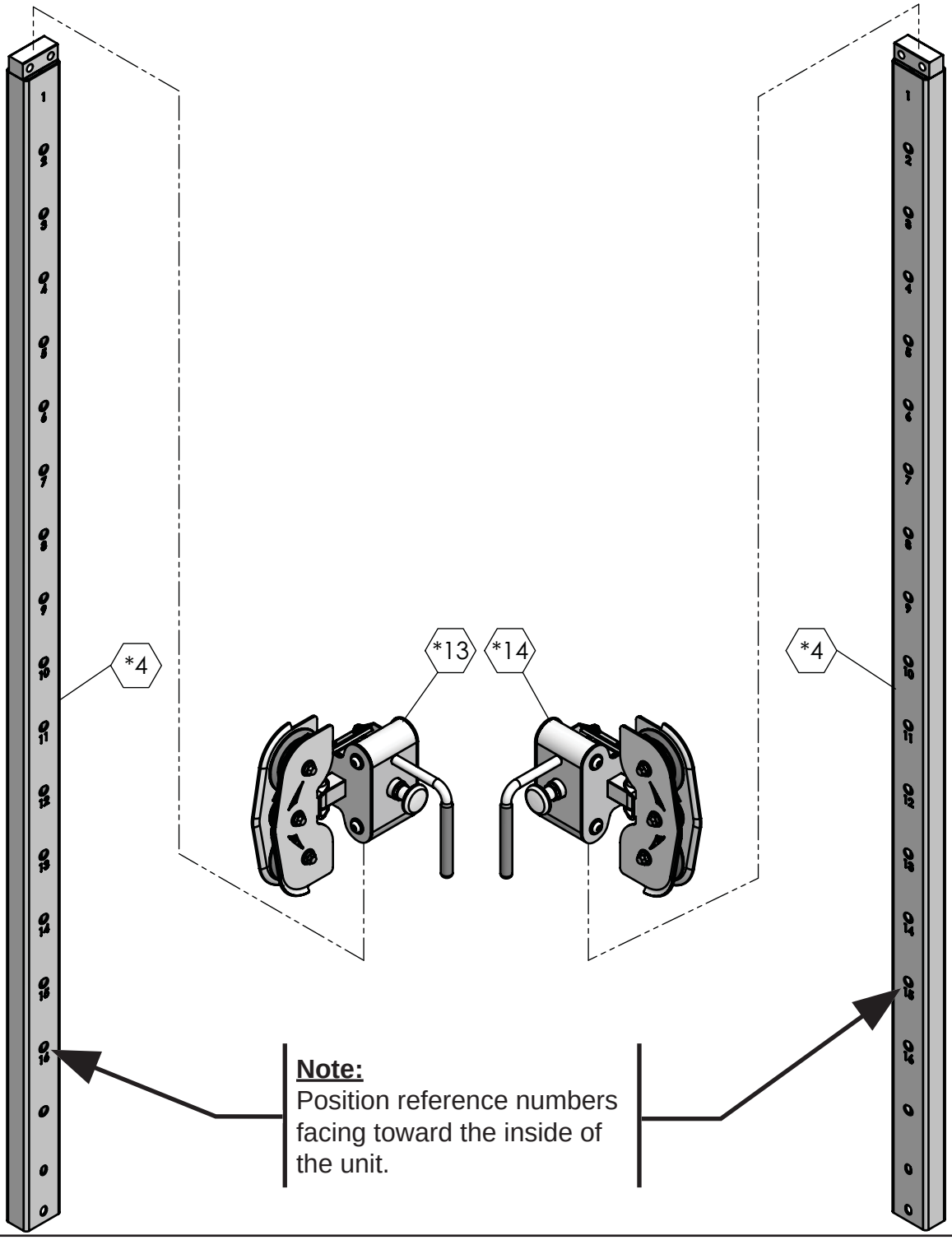

Note:
Position reference numbers facing toward the inside of the unit.

Step 4

Step 4 Assembly List

Item	Qty.	Description
4	**2**	**SELECTOR POST**
26	2	NYLON SPACER 3/8 X 7/8 X 3/8
31	2	HEX HEAD CAP SCREW GR-5 Z/P 3/8-16 X 2 9/16
34	2	HEX HEAD CAP SCREW GR-5 Z/P 3/8-16 X 3
43	8	FLAT WASHER SAE Z/P 3/8"
44	4	NYLON INSERT THIN PATTERN LOCK NUT Z/P 3/8-16

Note:
It is strongly recommended that two people participate in this assembly step.

Loosely Tighten

70%

Loosely tighten all hardware in this step. DO NOT Fully Tighten. Some component(s) may need pre-assembly and or alignment during the assembly process.

Note:
Position reference numbers facing toward the inside of the unit.

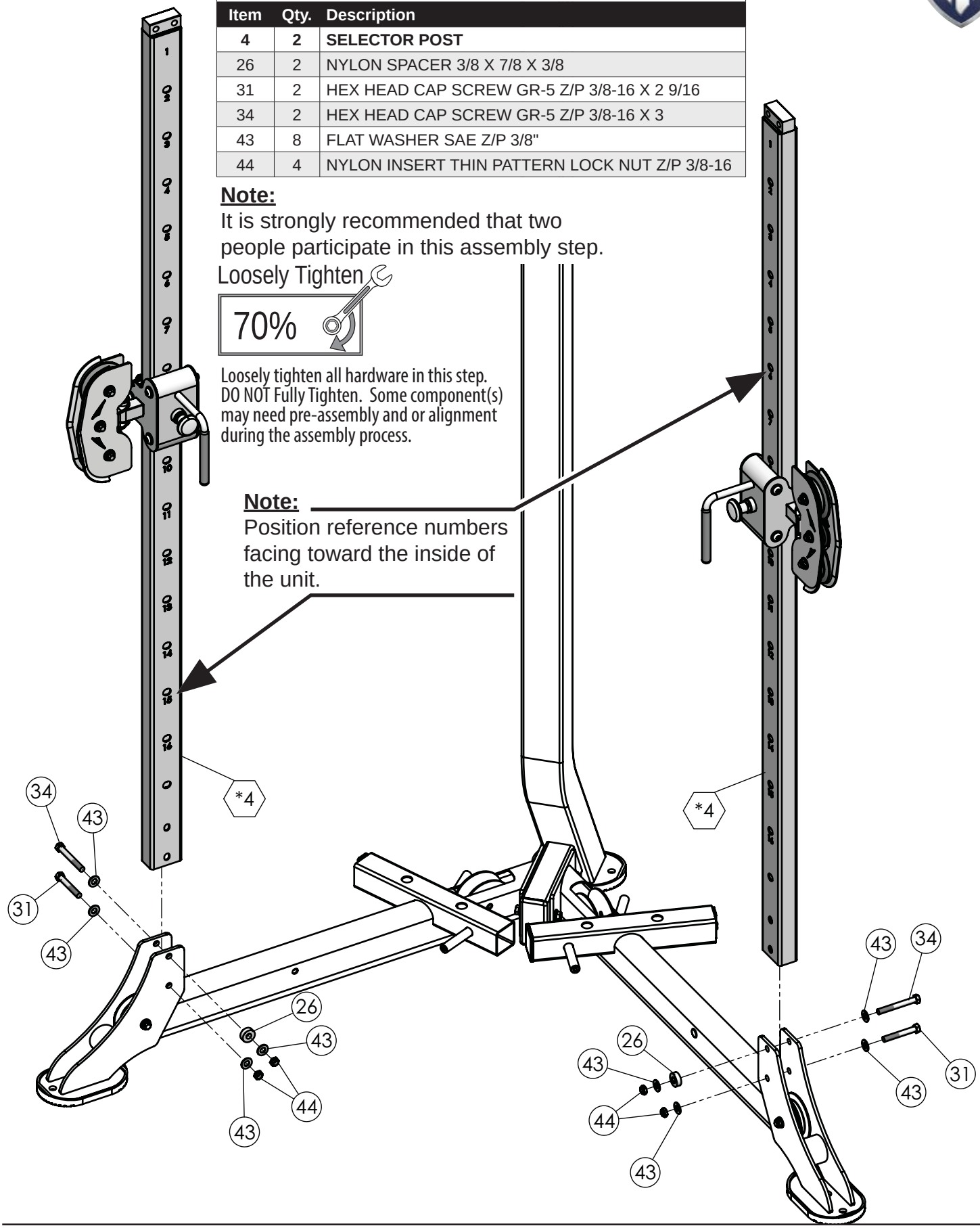

Step 5

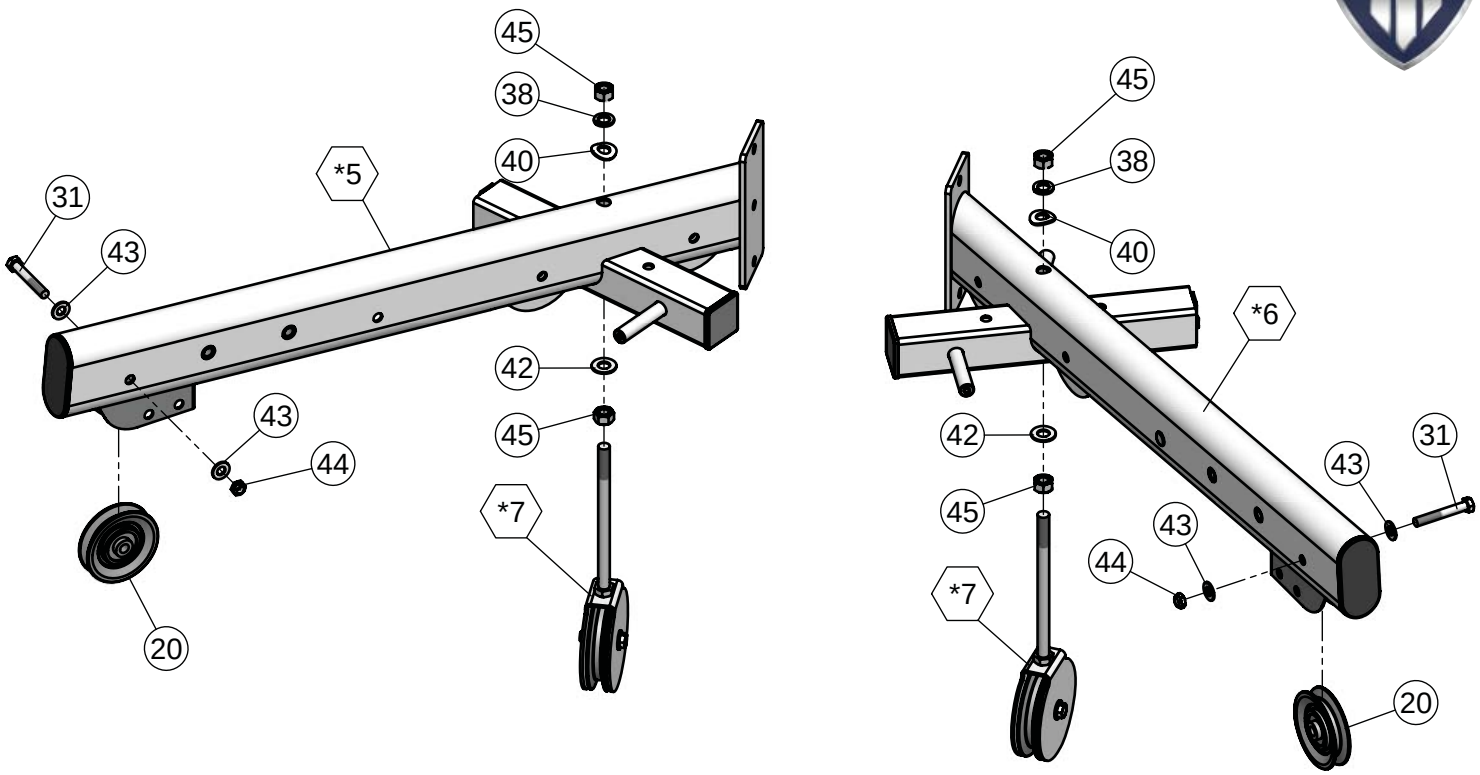

Loosely Tighten

70%

Loosely tighten all hardware in this step. DO NOT Fully Tighten. Some component(s) may need pre-assembly and or alignment during the assembly process.

Step 5 Assembly List		
Item	**Qty.**	**Description**
20	2	BLACK NYLON PULLEY WIDE GROOVE 3/8 X 1 X 3 1/2
31	2	HEX HEAD CAP SCREW GR-5 Z/P 3/8-16 X 2 9/16
38	2	SPLIT LOCK WASHER Z/P 1/2"
40	2	ARC WASHER SAE Z/P 1/2"
42	2	FLAT WASHER SAE Z/P 1/2"
43	4	FLAT WASHER SAE Z/P 3/8"
44	2	NYLON INSERT THIN PATTERN LOCK NUT Z/P 3/8-16
45	4	FINISHED HEX NUT Z/P 1/2-13
***5**	**1**	**TOP FRAME, LEFT SIDE ASSEMBLY**
***6**	**1**	**TOP FRAME, RIGHT SIDE ASSEMBLY**
***7**	**2**	**ADJUSTABLE PULLEY BRACKET ASSEMBLY**

Step 6

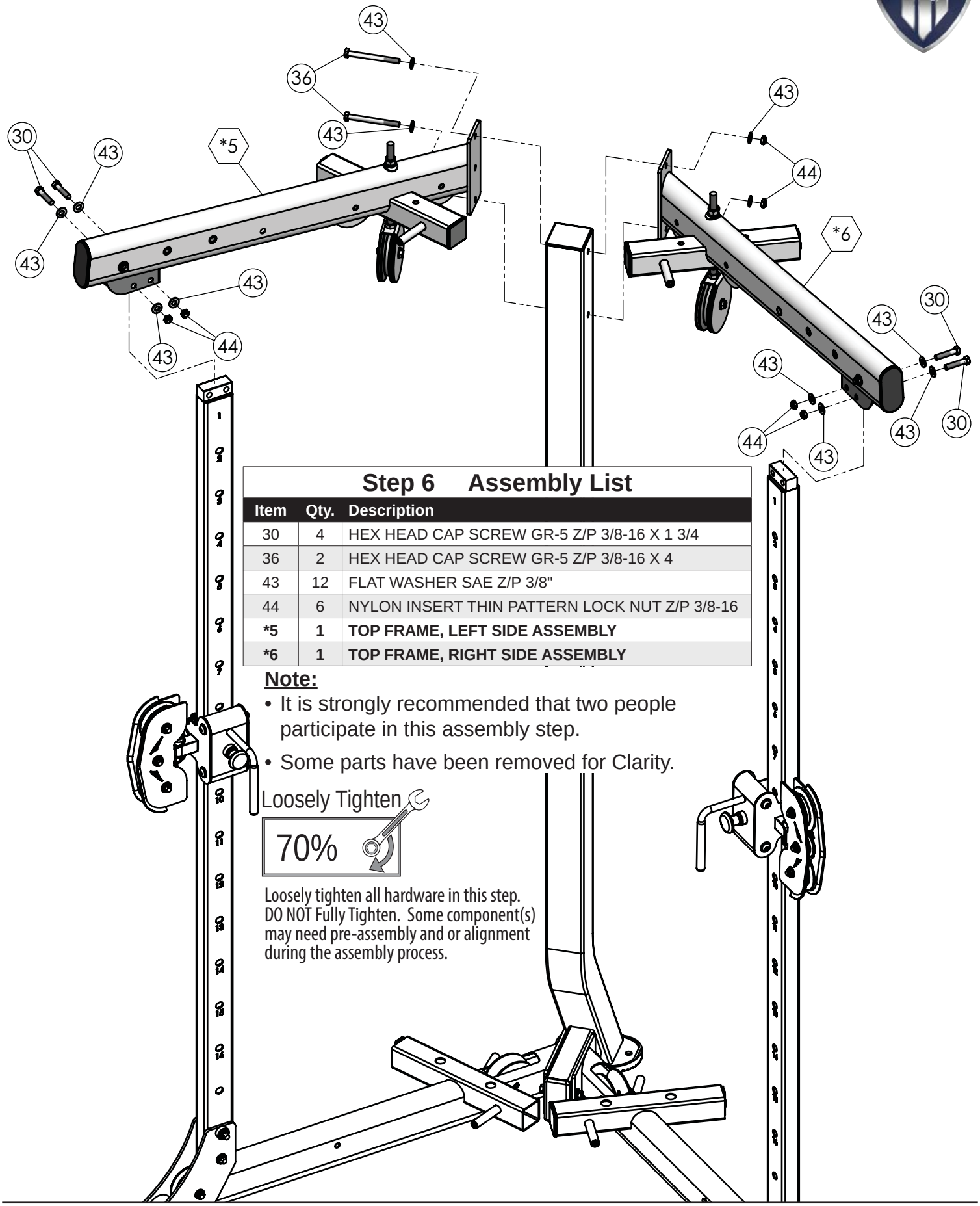

Step 6 Assembly List

Item	Qty.	Description
30	4	HEX HEAD CAP SCREW GR-5 Z/P 3/8-16 X 1 3/4
36	2	HEX HEAD CAP SCREW GR-5 Z/P 3/8-16 X 4
43	12	FLAT WASHER SAE Z/P 3/8"
44	6	NYLON INSERT THIN PATTERN LOCK NUT Z/P 3/8-16
***5**	**1**	**TOP FRAME, LEFT SIDE ASSEMBLY**
***6**	**1**	**TOP FRAME, RIGHT SIDE ASSEMBLY**

Note:

- It is strongly recommended that two people participate in this assembly step.
- Some parts have been removed for Clarity.

Loosely Tighten

70%

Loosely tighten all hardware in this step. DO NOT Fully Tighten. Some component(s) may need pre-assembly and or alignment during the assembly process.

Step 7

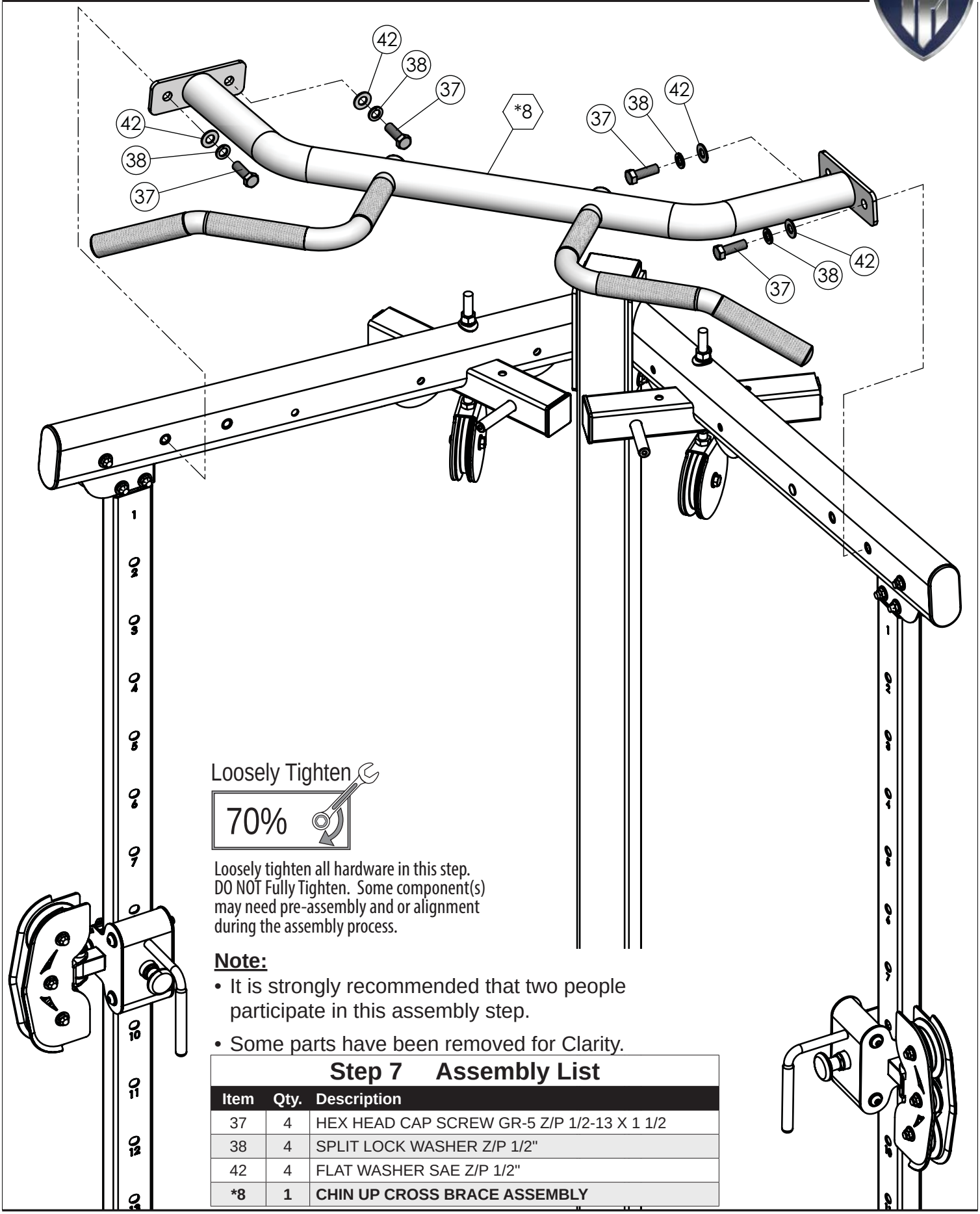

Loosely tighten all hardware in this step. DO NOT Fully Tighten. Some component(s) may need pre-assembly and or alignment during the assembly process.

Note:

- It is strongly recommended that two people participate in this assembly step.
- Some parts have been removed for Clarity.

Step 7 Assembly List

Item	Qty.	Description
37	4	HEX HEAD CAP SCREW GR-5 Z/P 1/2-13 X 1 1/2
38	4	SPLIT LOCK WASHER Z/P 1/2"
42	4	FLAT WASHER SAE Z/P 1/2"
***8**	**1**	**CHIN UP CROSS BRACE ASSEMBLY**

Step 8 (Standard 150 lbs Weight Stacks)

Note:

Threaded Sockets toward the top of the unit.

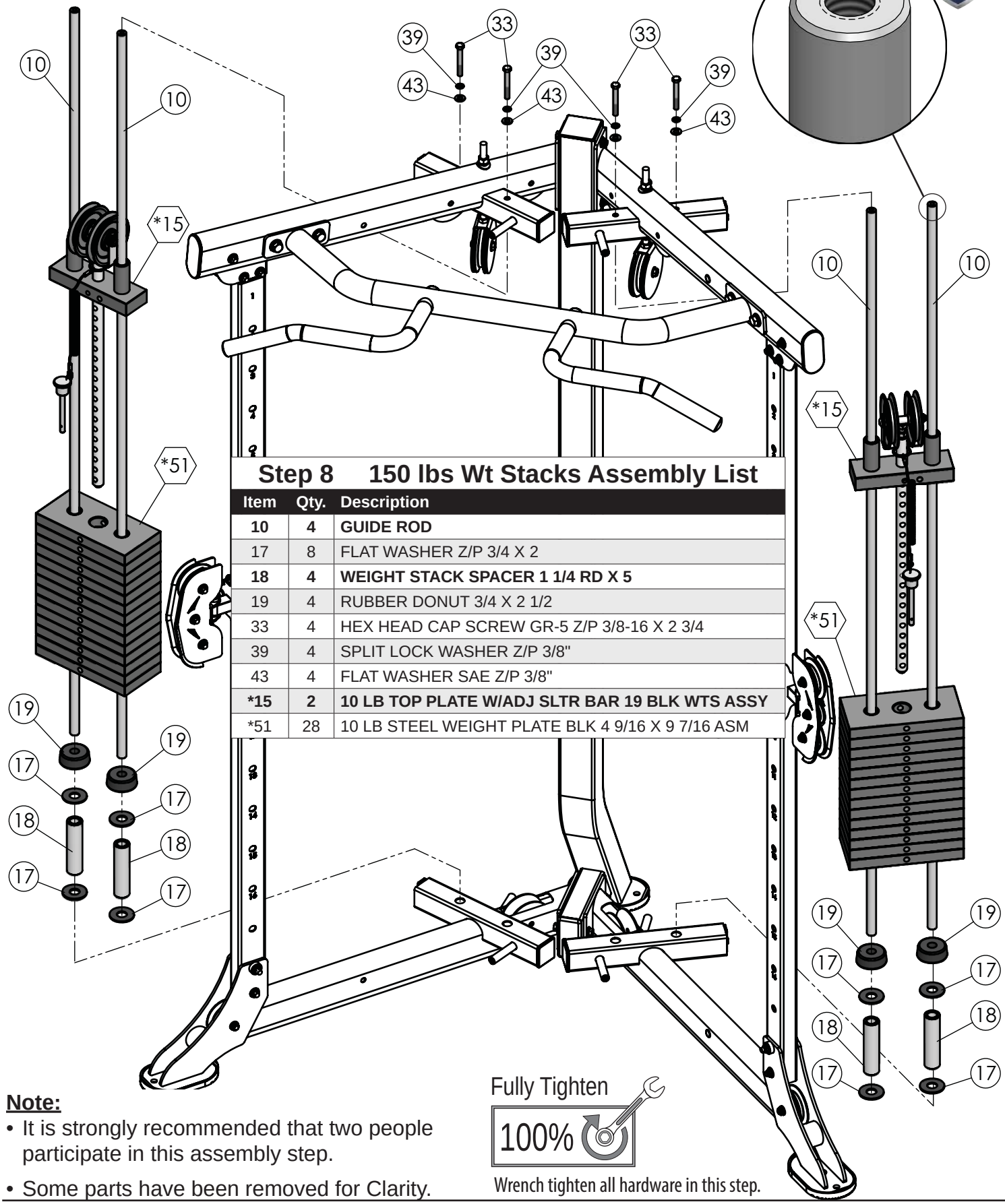

Step 8 150 lbs Wt Stacks Assembly List

Item	Qty.	Description
10	**4**	**GUIDE ROD**
17	8	FLAT WASHER Z/P 3/4 X 2
18	**4**	**WEIGHT STACK SPACER 1 1/4 RD X 5**
19	4	RUBBER DONUT 3/4 X 2 1/2
33	4	HEX HEAD CAP SCREW GR-5 Z/P 3/8-16 X 2 3/4
39	4	SPLIT LOCK WASHER Z/P 3/8"
43	4	FLAT WASHER SAE Z/P 3/8"
***15**	**2**	**10 LB TOP PLATE W/ADJ SLTR BAR 19 BLK WTS ASSY**
*51	28	10 LB STEEL WEIGHT PLATE BLK 4 9/16 X 9 7/16 ASM

Note:

- It is strongly recommended that two people participate in this assembly step.
- Some parts have been removed for Clarity.

Step 8 (with Upgraded 200 lbs Weight Stacks)

Note:

Threaded Sockets toward the top of the unit.

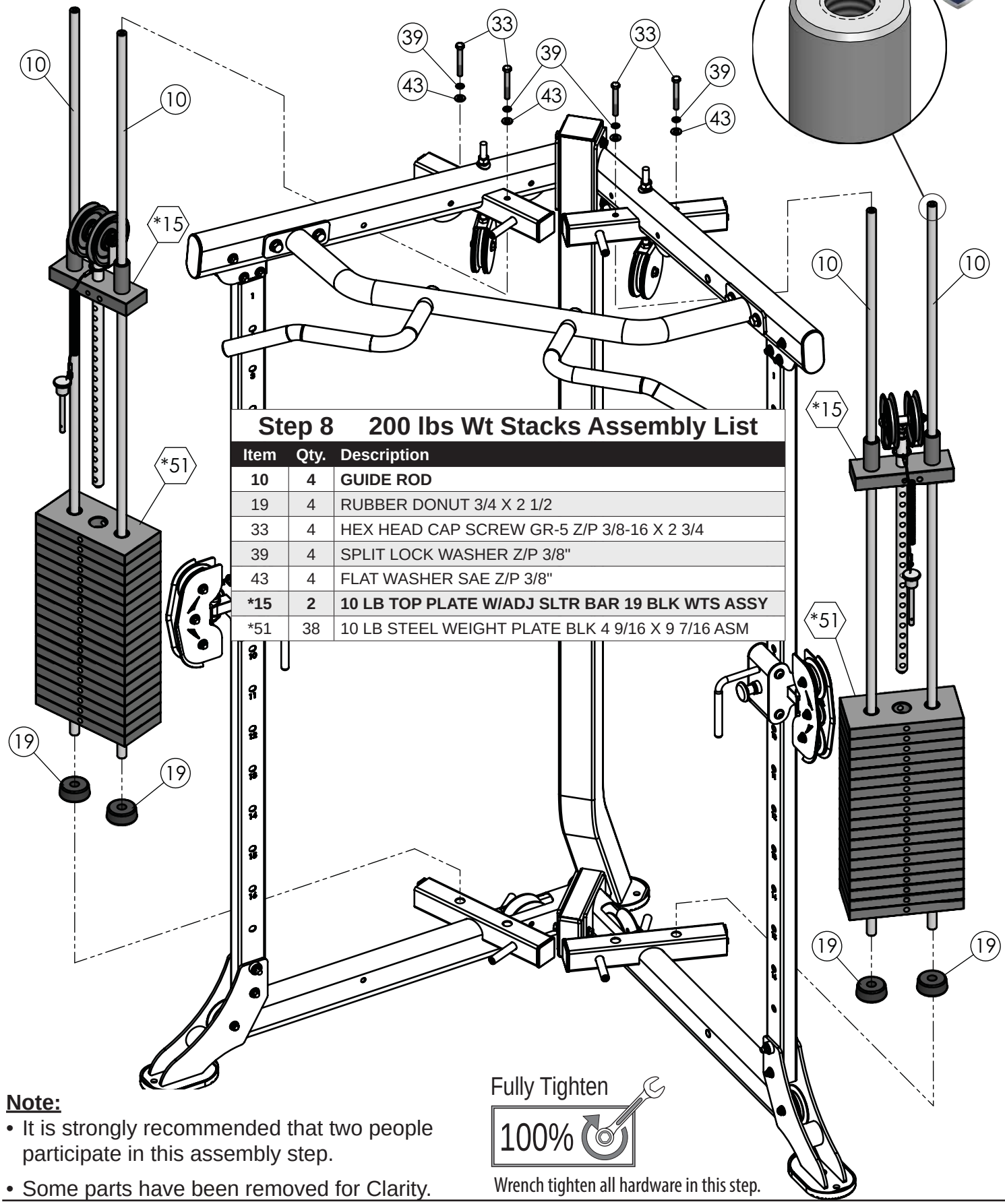

Step 8 200 lbs Wt Stacks Assembly List

Item	Qty.	Description
10	**4**	**GUIDE ROD**
19	4	RUBBER DONUT 3/4 X 2 1/2
33	4	HEX HEAD CAP SCREW GR-5 Z/P 3/8-16 X 2 3/4
39	4	SPLIT LOCK WASHER Z/P 3/8"
43	4	FLAT WASHER SAE Z/P 3/8"
***15**	**2**	**10 LB TOP PLATE W/ADJ SLTR BAR 19 BLK WTS ASSY**
*51	38	10 LB STEEL WEIGHT PLATE BLK 4 9/16 X 9 7/16 ASM

Fully Tighten

100%

Wrench tighten all hardware in this step.

Note:

- It is strongly recommended that two people participate in this assembly step.
- Some parts have been removed for Clarity.

Step 9

NOTE:

1. TOP PLATE LABEL GOES ON HOLE OFF CENTER AS SHOWN BELOW. LABEL WILL COVER HOLE ON CENTER.

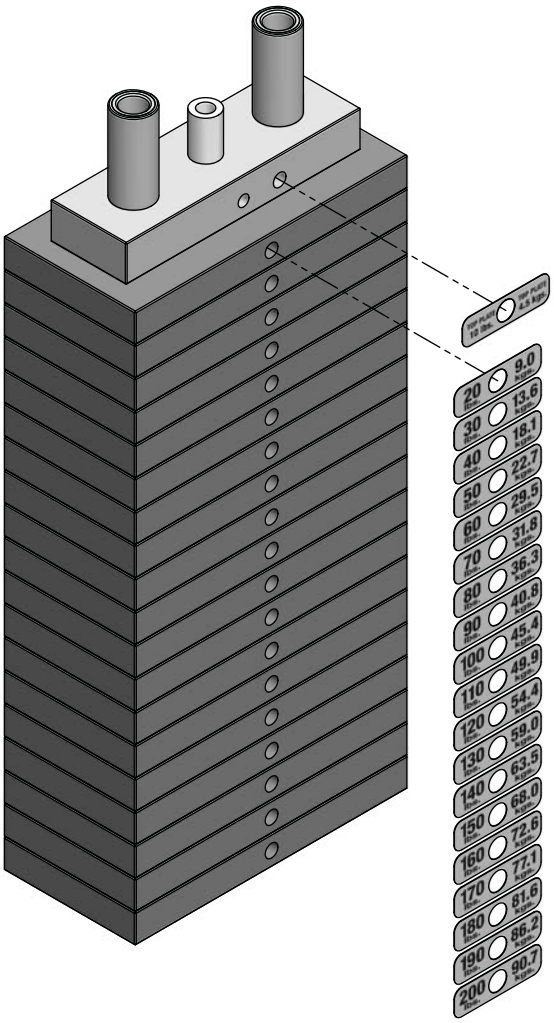

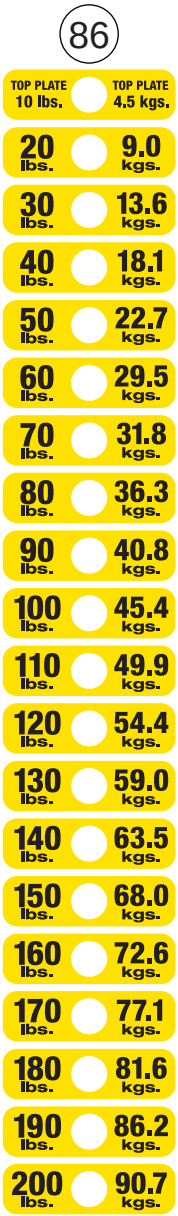

Weight stack labels and lubrication instructions

1. Wipe front surface of weight stack with rubbing alcohol and wipe dry.
2. Peel off back sheet (adhesive side) from label (#86) and make sure that the label remains attached to the application tape.
3. Line up hole of the second label to the hole of the first weight plate.
4. Make sure the hole of the last label lines up with the hole of the last weight plate and slowly press into place.
5. Gently remove application tape and rub each label firmly against the weight stack.
6. Once this is complete, repeat this procedure for Top Plate label.
7. Allow labels to stand for 2 days to allow adhesive to cure fully.
8. Open the lube package provided and apply a thin film of lubricant around the first 3 inches of the guide rods above the Top Plate.
9. After the cables are installed, do a set of reps to spread the lubricant thoroughly.

Step 10 Top LEFT SIDE Cable Assembly

Note:
Install **Plastic Insert Cap #75** after Making sure the **Cable** is running over the two **Reinforcement Tubes**.

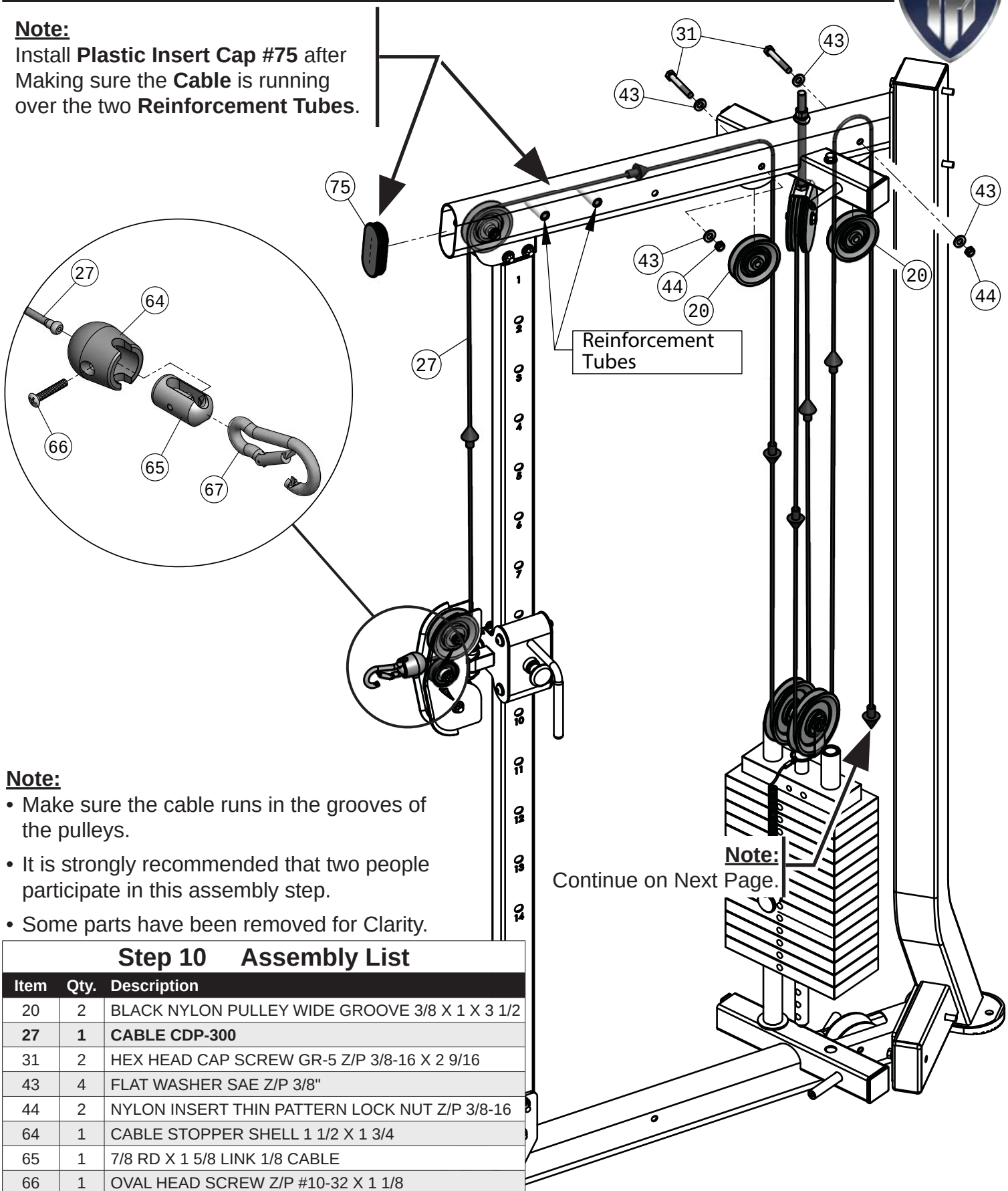

Note:
- Make sure the cable runs in the grooves of the pulleys.
- It is strongly recommended that two people participate in this assembly step.
- Some parts have been removed for Clarity.

Note:
Continue on Next Page.

Step 10 Assembly List

Item	Qty.	Description
20	2	BLACK NYLON PULLEY WIDE GROOVE 3/8 X 1 X 3 1/2
27	**1**	**CABLE CDP-300**
31	2	HEX HEAD CAP SCREW GR-5 Z/P 3/8-16 X 2 9/16
43	4	FLAT WASHER SAE Z/P 3/8"
44	2	NYLON INSERT THIN PATTERN LOCK NUT Z/P 3/8-16
64	1	CABLE STOPPER SHELL 1 1/2 X 1 3/4
65	1	7/8 RD X 1 5/8 LINK 1/8 CABLE
66	1	OVAL HEAD SCREW Z/P #10-32 X 1 1/8
67	1	SNAP LINK Z/P 8MM X 80MM
75	1	PLASTIC INSERT CAP ELLIPTICAL 2 X 4

Step 11 Bottom LEFT SIDE Cable Assembly

Step 11 Assembly List		
Item	**Qty.**	**Description**
20	1	BLACK NYLON PULLEY WIDE GROOVE 3/8 X 1 X 3 1/2
27	**1**	**CABLE CDP-300**
31	1	HEX HEAD CAP SCREW GR-5 Z/P 3/8-16 X 2 9/16
43	2	FLAT WASHER SAE Z/P 3/8"
44	1	NYLON INSERT THIN PATTERN LOCK NUT Z/P 3/8-16
64	1	CABLE STOPPER SHELL 1 1/2 X 1 3/4
65	1	7/8 RD X 1 5/8 LINK 1/8 CABLE
66	1	OVAL HEAD SCREW Z/P #10-32 X 1 1/8
67	1	SNAP LINK Z/P 8MM X 80MM

Note:

- Make sure the cable runs in the grooves of the pulleys.
- It is strongly recommended that two people participate in this assembly step.
- Some parts have been removed for Clarity.

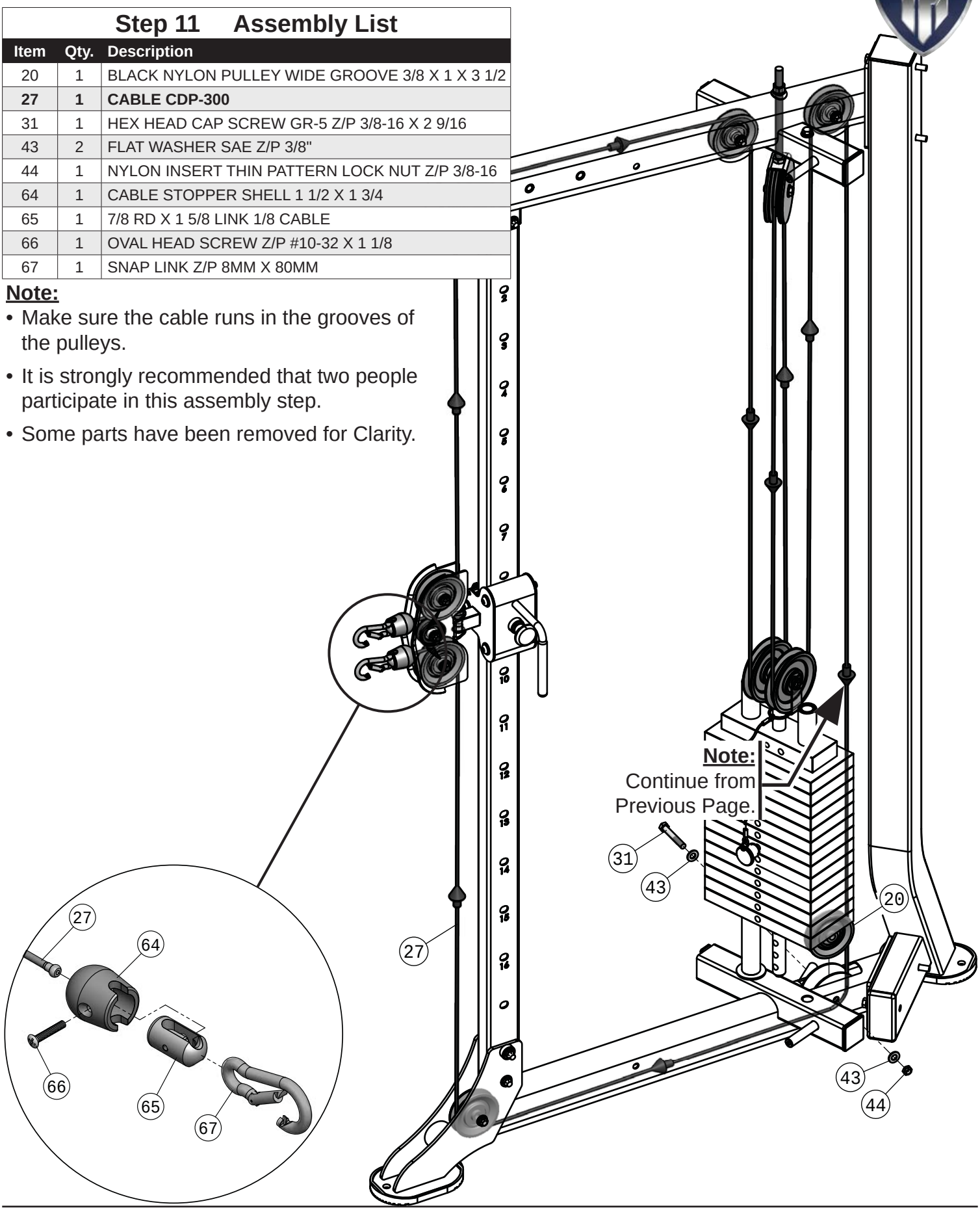

Step 12 Top RIGHT SIDE Cable Assembly

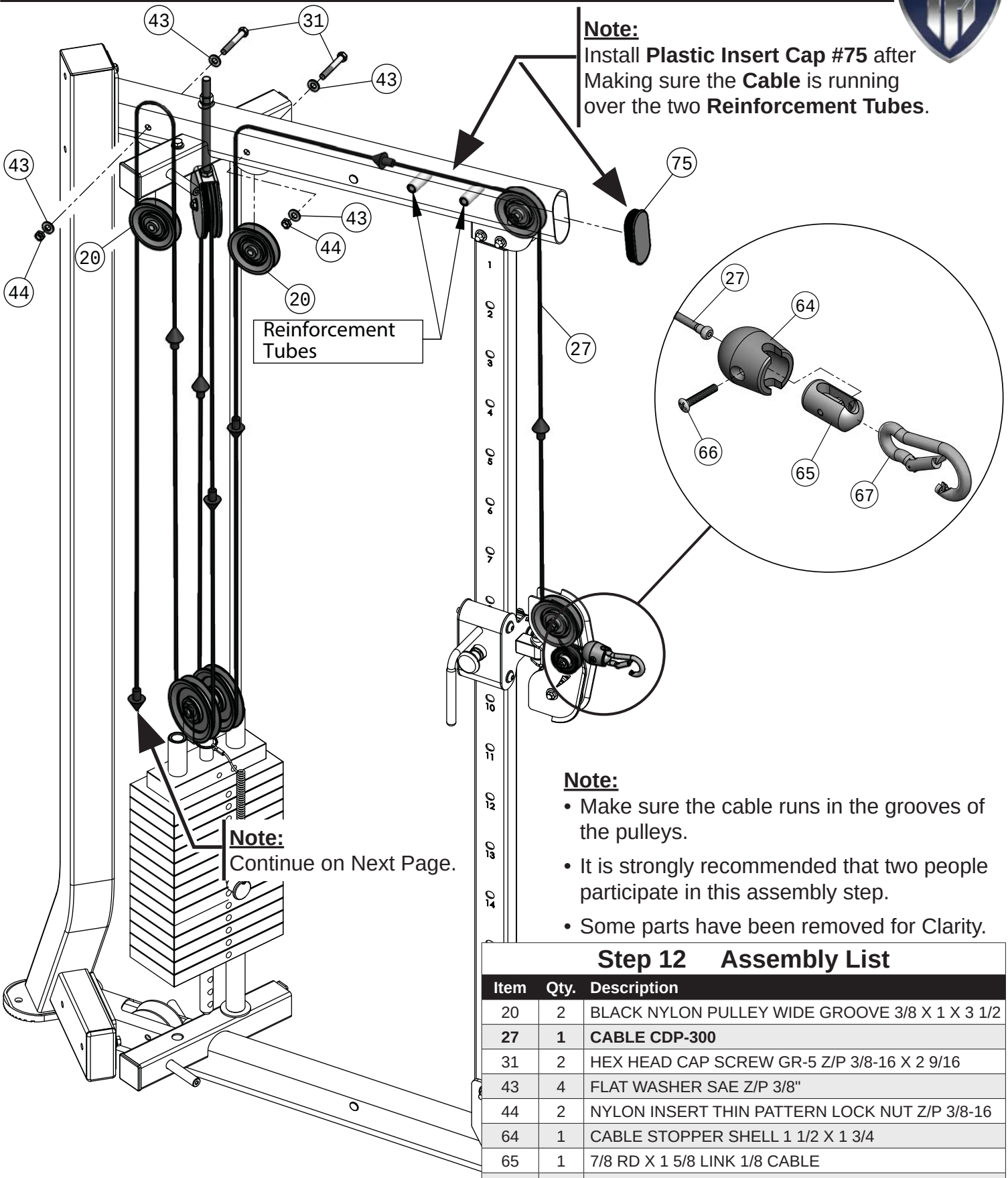

Note:

- Make sure the cable runs in the grooves of the pulleys.
- It is strongly recommended that two people participate in this assembly step.
- Some parts have been removed for Clarity.

Step 12 Assembly List

Item	Qty.	Description
20	2	BLACK NYLON PULLEY WIDE GROOVE 3/8 X 1 X 3 1/2
27	**1**	**CABLE CDP-300**
31	2	HEX HEAD CAP SCREW GR-5 Z/P 3/8-16 X 2 9/16
43	4	FLAT WASHER SAE Z/P 3/8"
44	2	NYLON INSERT THIN PATTERN LOCK NUT Z/P 3/8-16
64	1	CABLE STOPPER SHELL 1 1/2 X 1 3/4
65	1	7/8 RD X 1 5/8 LINK 1/8 CABLE
66	1	OVAL HEAD SCREW Z/P #10-32 X 1 1/8
67	1	SNAP LINK Z/P 8MM X 80MM
75	1	PLASTIC INSERT CAP ELLIPTICAL 2 X 4

Step 13 Bottom RIGHT SIDE Cable Assembly

Step 13 Assembly List

Item	Qty.	Description
20	1	BLACK NYLON PULLEY WIDE GROOVE 3/8 X 1 X 3 1/2
27	**1**	**CABLE CDP-300**
31	1	HEX HEAD CAP SCREW GR-5 Z/P 3/8-16 X 2 9/16
43	2	FLAT WASHER SAE Z/P 3/8"
44	1	NYLON INSERT THIN PATTERN LOCK NUT Z/P 3/8-16
64	1	CABLE STOPPER SHELL 1 1/2 X 1 3/4
65	1	7/8 RD X 1 5/8 LINK 1/8 CABLE
66	1	OVAL HEAD SCREW Z/P #10-32 X 1 1/8
67	1	SNAP LINK Z/P 8MM X 80MM

Note:

- Make sure the cable runs in the grooves of the pulleys.
- It is strongly recommended that two people participate in this assembly step.
- Some parts have been removed for Clarity.

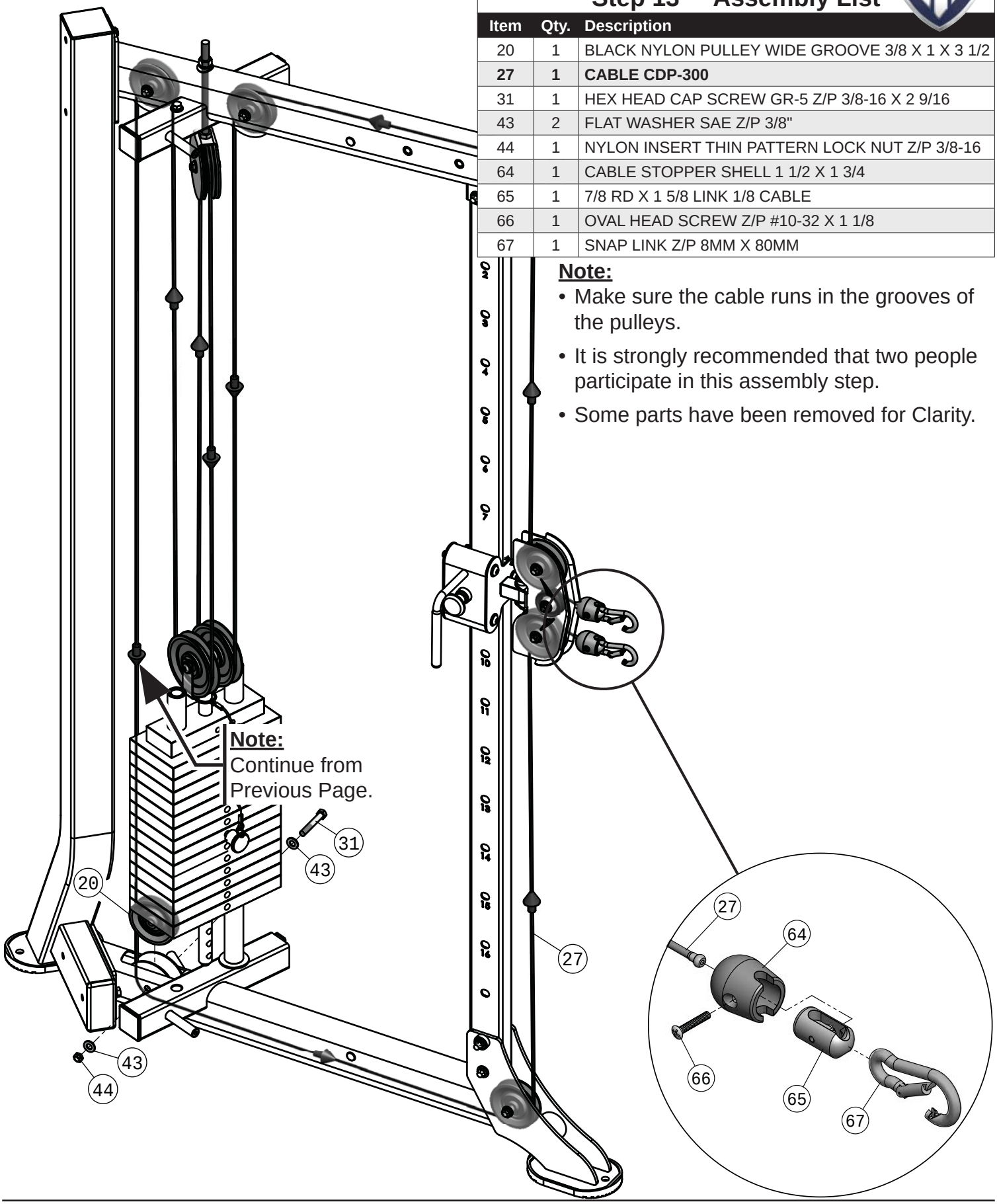

Step 14

Fully Tighten

100%

Proceed to inspect; align and wrench tighten **ALL** hardware assemblies specially those left loosely fasten, **making sure the unit is assembled square and perpendicular.**

Note:
It is strongly recommended that two people participate in this assembly step.

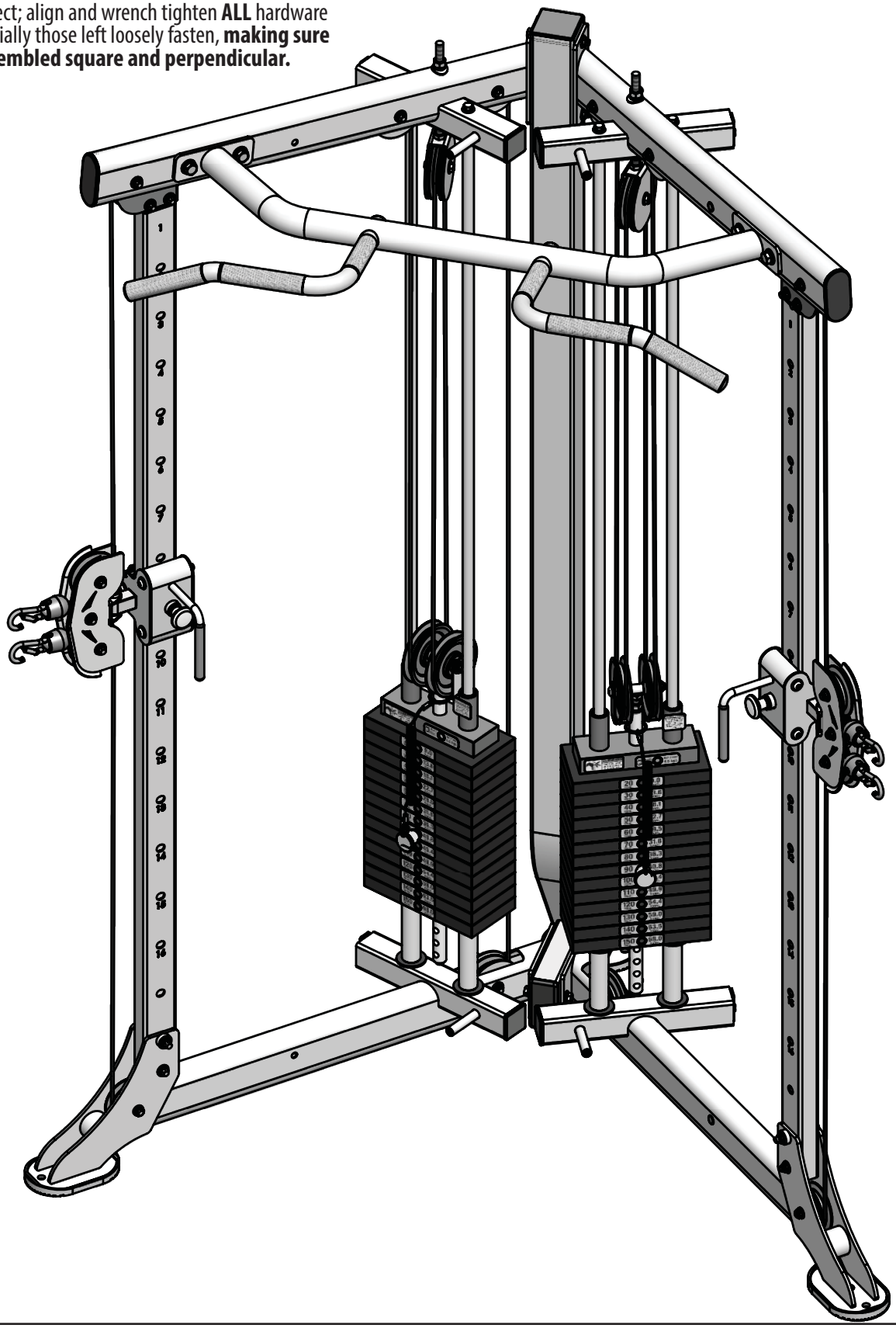

Step 15

Step 15 Assembly List		
Item	**Qty.**	**Description**
28	8	HEX HEAD CAP SCREW GR-5 Z/P 1/4-20 X 3/4
41	8	FLAT WASHER USS Z/P 1/4"
***11**	**1**	**REAR SHROUD, LEFT SIDE ASSEMBLY**
***46**	**1**	**REAR SHROUD, RIGHT SIDE ASSEMBLY**

Note:

- It is strongly recommended that two people participate in this assembly step.
- Some parts have been removed for Clarity.

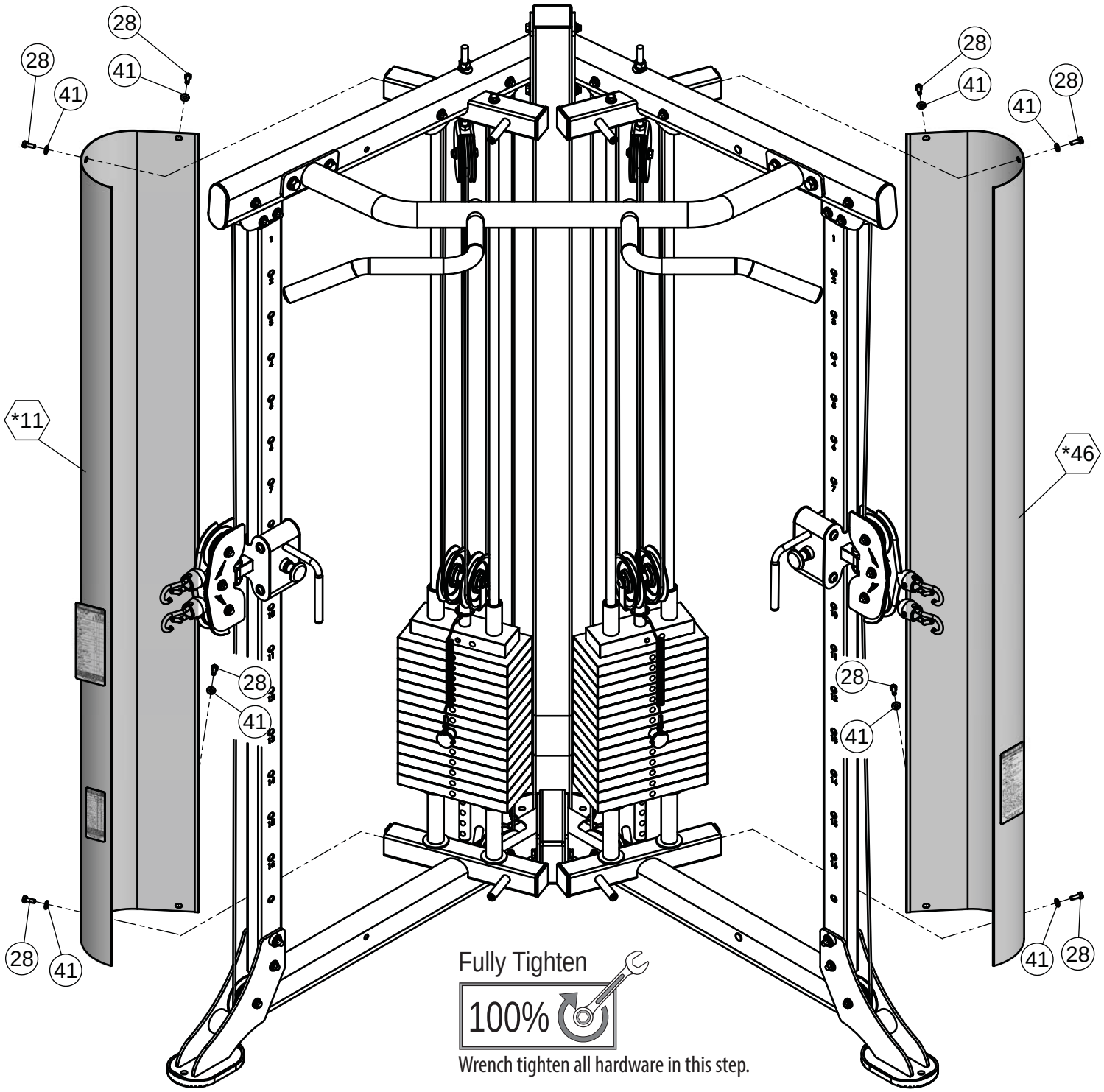

Step 16

Step 16 Assembly List		
Item	**Qty.**	**Description**
28	4	HEX HEAD CAP SCREW GR-5 Z/P 1/4-20 X 3/4
41	4	FLAT WASHER USS Z/P 1/4"
***12**	**1**	**FRONT SHROUD ASSEMBLY**

Note:

- It is strongly recommended that two people participate in this assembly step.
- Some parts have been removed for Clarity.

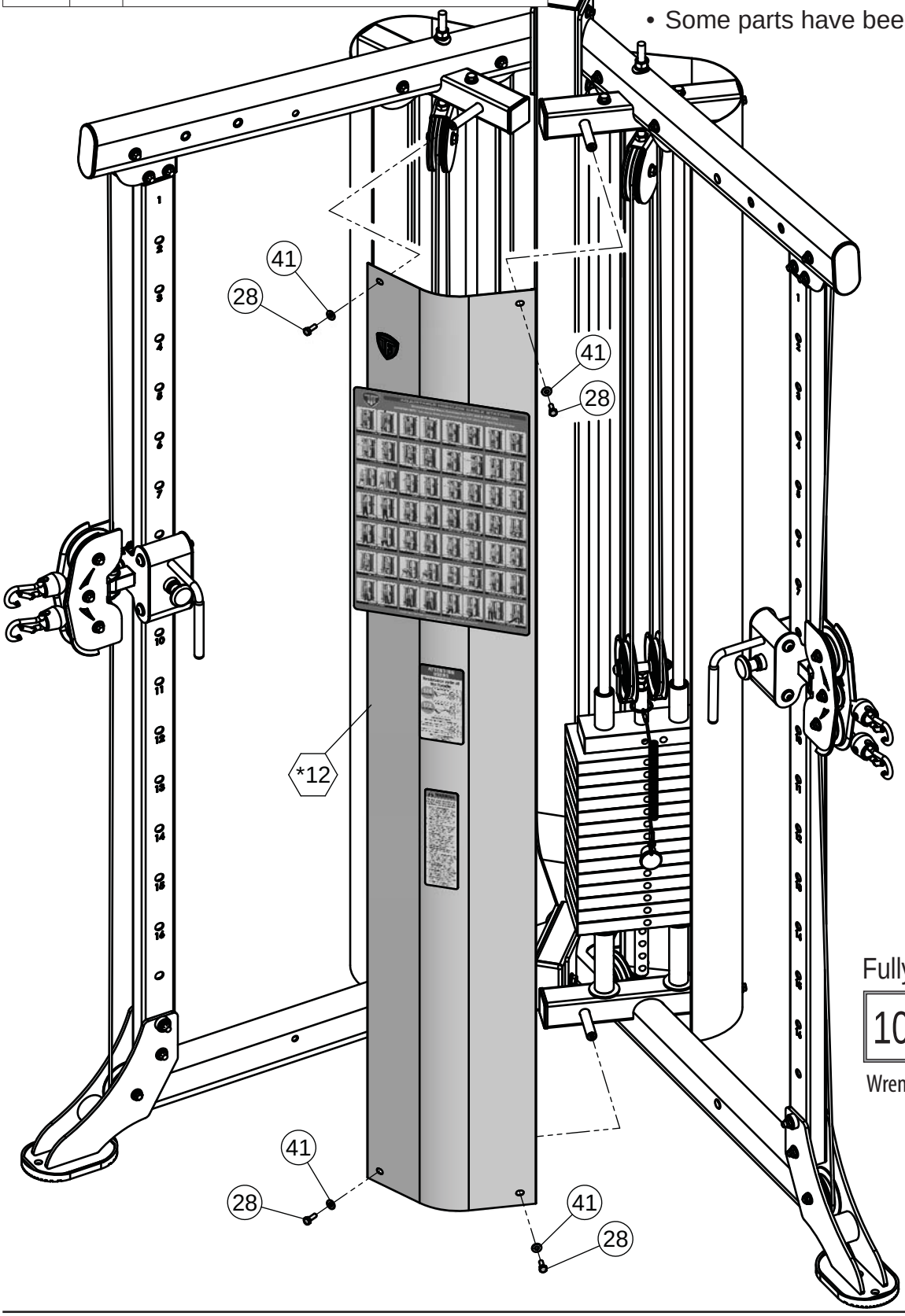

Fully Tighten

100%

Wrench tighten all hardware in this step.

Step 17

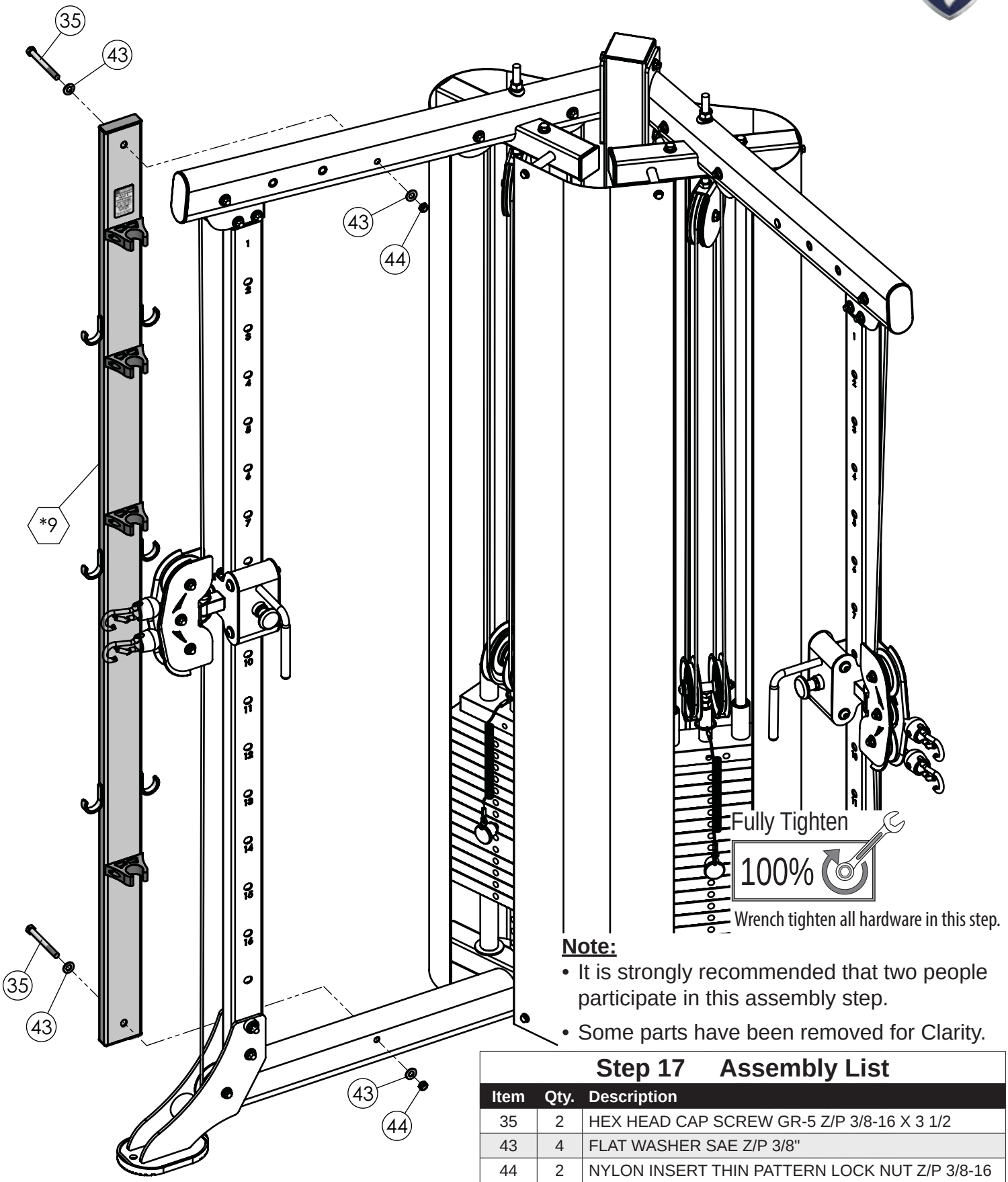

Note:

- It is strongly recommended that two people participate in this assembly step.
- Some parts have been removed for Clarity.

Step 17 Assembly List

Item	Qty.	Description
35	2	HEX HEAD CAP SCREW GR-5 Z/P 3/8-16 X 3 1/2
43	4	FLAT WASHER SAE Z/P 3/8"
44	2	NYLON INSERT THIN PATTERN LOCK NUT Z/P 3/8-16
***9**	**1**	**ACCESSORY HOLDER TUBE**

Step 18

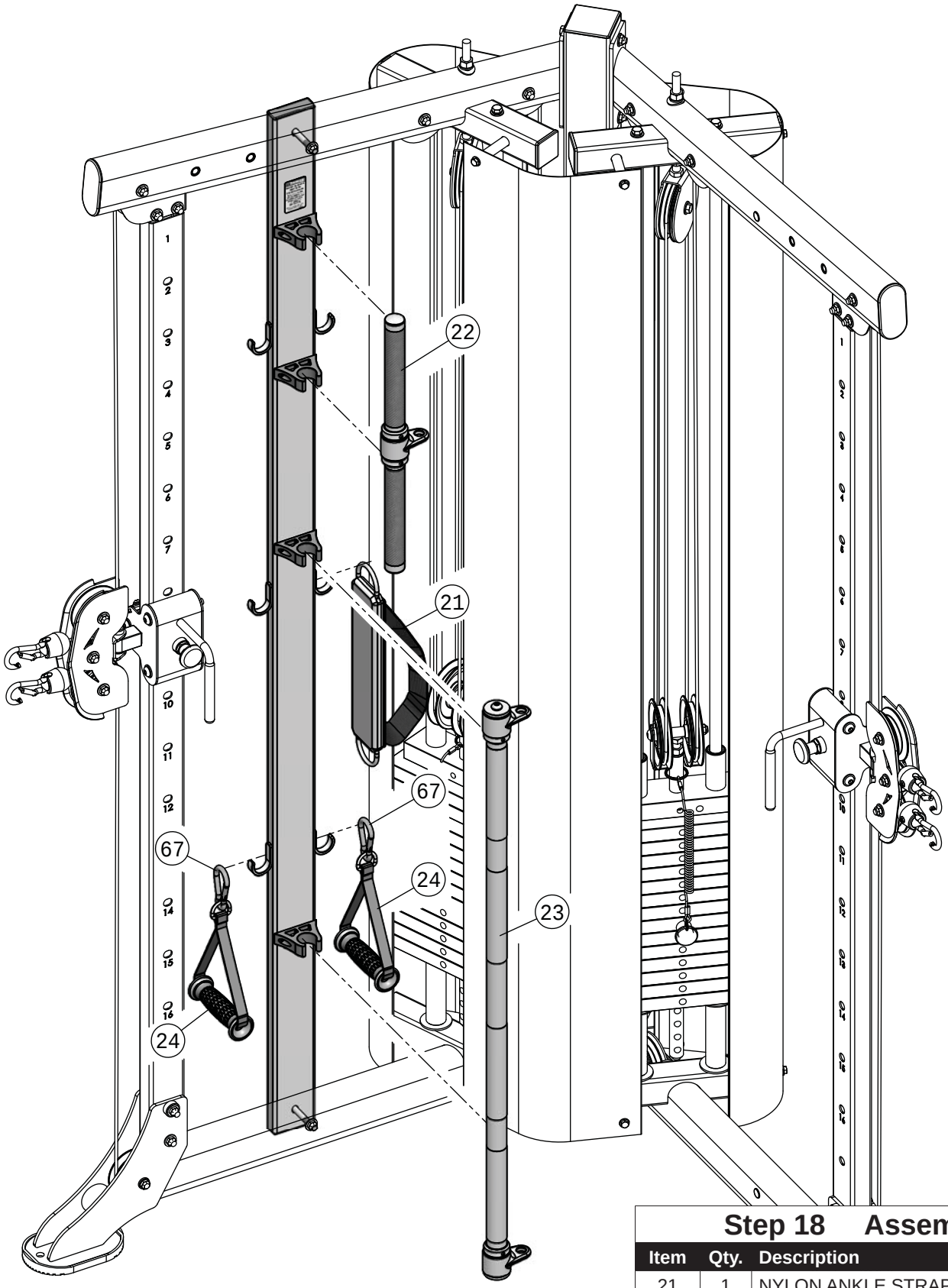

Step 18 Assembly List

Item	Qty.	Description
21	1	NYLON ANKLE STRAP
22	1	LOW ROW BAR 1 1/4 ALUMINUM
23	1	SQUAT BAR 46" DOUBLE LINK (TUBULAR)
24	2	CONTOUR ERGO HANDLE LONG STRAP
67	2	SNAP LINK Z/P 8MM X 80MM

Parts List

COLOR CHART

***BLACK BOLD = PRE-ASSEMBLED COMPONENTS**

BLACK BOLD = SUBASSEMBLY COMPONENTS

BLACK = HARDWARE

CDP-300
Parts List

REV0

ITEM	DESCRIPTION	REV.	PART NO.	QTY.
1	**REAR UPRIGHT**	**0**	**UP8071**	**1**
2	**BASE FRAME, LEFT SIDE**	**0**	**UP8066**	**1**
3	**BASE FRAME, RIGHT SIDE**	**0**	**UP8067**	**1**
4	**SELECTOR POST**	**0**	**UP8072**	**2**
5	**TOP FRAME, LEFT SIDE**	**0**	**UP8068**	**1**
6	**TOP FRAME, RIGHT SIDE**	**0**	**UP8069**	**1**
7	**ADJUSTABLE PULLEY BRACKET**	**0**	**UP8074**	**2**
8	**CHIN UP CROSS BRACE**	**0**	**UP8070**	**1**
9	**ACCESSORY HOLDER TUBE**	**0**	**UP8077**	**1**
10	**GUIDE ROD**	**0**	**UP8073**	**4**
11	**REAR SHROUD**	**0**	**UP8075**	**2**
12	**FRONT SHROUD**	**0**	**UP8076**	**1**
13	**CARRIAGE, LEFT SIDE**	**0**	**UP7686**	**1**
14	**CARRIAGE, RIGHT SIDE**	**0**	**UP7685**	**1**
15	10 LB TOP PLATE W/ADJ SLTR BAR 19 BLK WTS ASSY		BNH1982	2
16	**SELECTOR PIN W/COIL 3/8 X 4 GOLD KNOB**	**0**	**UP3035**	**2**
17	FLAT WASHER Z/P 3/4 X 2		BNH2128	8
18	**WEIGHT STACK SPACER 1 1/4 RD X 5**	**0**	**UP6745**	**4**
19	RUBBER DONUT 3/4 X 2 1/2		BNH0068	4
20	BLACK NYLON PULLEY WIDE GROOVE 3/8 X 1 X 3 1/2		BNH2832	14
21	NYLON ANKLE STRAP		BNH3203	1
22	LOW ROW BAR 1 1/4 ALUMINUM		BNH1771	1
23	SQUAT BAR 46" DOUBLE LINK (TUBULAR)		BNH3228	1
24	CONTOUR ERGO HANDLE LONG STRAP		BNH2738	2
25	FLANGED SPACER Z/P 3/8 X 16.5MM		BNH4283	4
26	NYLON SPACER 3/8 X 7/8 X 3/8		BNH0392	2
27	**CABLE CDP-300**	**0**	**UP8078**	**2**
28	HEX HEAD CAP SCREW GR-5 Z/P 1/4-20 X 3/4		BNH2106	12
29	HEX HEAD CAP SCREW GR-5 Z/P 3/8-16 X 1		BNH2037	2
30	HEX HEAD CAP SCREW GR-5 Z/P 3/8-16 X 1 3/4		BNH2040	6
31	HEX HEAD CAP SCREW GR-5 Z/P 3/8-16 X 2 9/16		BNH4314	12
33	HEX HEAD CAP SCREW GR-5 Z/P 3/8-16 X 2 3/4		BNH2045	4
34	HEX HEAD CAP SCREW GR-5 Z/P 3/8-16 X 3		BNH2046	3
35	HEX HEAD CAP SCREW GR-5 Z/P 3/8-16 X 3 1/2		BNH2107	2
36	HEX HEAD CAP SCREW GR-5 Z/P 3/8-16 X 4		BNH2267	2
37	HEX HEAD CAP SCREW GR-5 Z/P 1/2-13 X 1 1/2		BNH2171	4
38	SPLIT LOCK WASHER Z/P 1/2"		BNH0572	8
39	SPLIT LOCK WASHER Z/P 3/8"		BNH0658	6
40	ARC WASHER SAE Z/P 1/2"		BNH2697	2
41	FLAT WASHER USS Z/P 1/4"		BNH2105	12
42	FLAT WASHER SAE Z/P 1/2"		BNH2031	6
43	FLAT WASHER SAE Z/P 3/8"		BNH2030	70
44	NYLON INSERT THIN PATTERN LOCK NUT Z/P 3/8-16		BNH2026	35
45	FINISHED HEX NUT Z/P 1/2-13		BNH0206	6
47	**SWIVEL DOUBLE PULLEY BRACKET**	**0**	**UP7688**	**2**
48	**CARRIAGE COVER PLATE**	**0**	**UP6765**	**2**
49	**CABLE RETAINER BRACKET (L-SHAPED)**	**0**	**UP0014**	**4**
50	**TOP PLATE DOUBLE PULLEY HOLDER**	**0**	**UP7689**	**2**
52	NYLON SNAP-IN FINISHING PLUG 3/8"		BNH2280	4
51	10 LB STEEL WEIGHT PLATE BLACK 4 9/16 X 9 7/16		BNH1237	28
53	1-1/4" RUBBER POLE STORAGE CLIP		BNH3243	4
54	2" NYLON PULLEY		BNH3084	2
55	BLACK NYLON PULLEY WIDE GROOVE 3/8 X 1 X 4 1/2		BNH2834	6
56	BRONZE BUSHING SAE .502X.628 X 1/2 X 7/8 X 1/8"		BNH0528	4

ITEM	DESCRIPTION	REV.	PART NO.	QTY.
57	BUTTON HEAD SOCKET CAP SCREW 10-32 X 1/2		BNH3406	8
58	BUTTON HEAD SOCKET CAP SCREW B-Z/P 1/4-20 X 1/2		BNH4091	8
59	BUTTON HEAD SOCKET CAP SCREW B-Z/P 3/8-16 X 1 3/4		BNH2590	6
60	BUTTON HEAD SOCKET CAP SCREW B-Z/P 5/16-18 X 4		BNH4044	6
61	BUTTON HEAD SOCKET CAP SCREW Z/P 3/8-16 X 3 5/8		BNH3408	2
62	FLAT SAE WASHER B-Z/P #12		BNH4008	8
63	FLAT WASHER SAE Z/P 5/16"		BNH2534	12
64	CABLE STOPPER SHELL 1 1/2 X 1 3/4		BNH4230	4
65	7/8 RD X 1 5/8 LINK 1/8 CABLE		BNH4231	4
66	OVAL HEAD SCREW Z/P #10-32 X 1 1/8		BNH2793	4
67	SNAP LINK Z/P 8MM X 80MM		BNH0065	6
68	NYLON BUSHING 25/32 ID X 1 1/16 OD X 29/32		BNH0532	64
69	NYLON INSERT LOCK NUT Z/P 5/16-18		BNH2056	6
70	PLASTIC INSERT CAP 2" SQ 10-14 GA		BNH0012	4
71	PLASTIC INSERT CAP 1 1/4" RD V30906		BNH3407	4
72	PLASTIC INSERT CAP 1" X 3" _ 11 GA		BNH0007	2
73	PLASTIC INSERT CAP 2 X 3 _ 11-14 GA		BNH0052	1
74	PLASTIC INSERT CAP 3" SQ 10-14 GA		BNH2992	1
75	PLASTIC INSERT CAP ELLIPTICAL 2 X 4 (50MM X 100MM)		BNH1794	2
76	PULL PIN 1/2 X 2 3/4 SHORT NOSE (YELLOW KNOB)		BNH0640	2
77	ROLL PIN B/O 3/8 X 2		BNH0661	2
78	ROLLER WHEEL		BNH2869	6
79	RUBBER FOOT FOR 6 X 4 1/4 PLATE		BNH1647	3
80	SHOULDER BOLT ALLOY 1/2 X 1 1/2		BNH0098	2
81	SOCKET SET SCREW Z/P 10-32 X 1/8		BNH2088	2
82	SPLIT LOCK WASHER B-Z/P 1/4		BNH2686	8
83	U-STYLE TAPPED HOLE NUT 1/4-20		BNH0708	4
84	YELLOW GRIP 1/2 X 4		BNH3059	2
85	TFI EMBLEM 1.88 HIGH X 1.98 WIDE BLUE AND CHROME		BNH4304	1
86	DECAL NUMBERS 10-200 LBS/KGS 7/8 X 3 YELLOW & BLK		BNH4069	2
87	FACILITY SIGN BE ALERT! THE FITNESS EQUIPMENT...		BNH3138	1
88	EXCECISE CHART CDP-300 DECAL		BNH3149	1
89	LABEL CAUTION CHECK PULL-PIN IS FULLY... 1 1/2 X 1 3/8		BNH2912	2
90	LABEL DANGER CHECK RETAINING NUT... 1.5 X 1		BNH3146	2
91	LABEL IMPORTANT FOR SMOOTH PERFORMANCE...		BNH2916	2
92	LABEL RESISTANCE RATIO AT THE HANDLE 3X6		BNH3150	1
93	LABEL WARNING ANCHOR BOLT, 2 X 1 1/4"		BNH3089	3
94	LABEL WARNING KEEP BODY, HANDS, 1 1/2 X 2 1/4		BNH2908	2
95	LABEL_TFI SERIAL NO. 2.5 X 1.5		BNH3147	1
96	LABEL-DANGER DO NOT LEAN AGAINST OR PULL...		BNH2955	2
97	LABEL-DANGER USE THIS EQUIPMENT ONLY...		BNH2903	1
98	LABEL-IMPORTANT ADJUST CABLE TENSION HERE		BNH2924	2
99	LABEL-IMPORTANT FOR SMOOTH PERFORMANCE...		BNH2925	2
100	LABEL-INSPECTIONS RECOMMENDED INSPECTION…		BNH3137	1
101	LABEL-SCHEDULE REPLACEMENT PARTS...		BNH3135	1
102	LABEL-WARNING KEEP BODY, HANDS...		BNH2926	2
103	LABEL-WARNING_SERIOUS INJURY OR DEATH		BNH3134	1
104	LABEL-WARRANTY LIGHT COMMERCIAL		BNH3136	1
105	SUPER LUBE TEFLON LUBRICANT 82340		BNH0704	1
106	HEX KEY 1/8"		BNH2541	1
107	HEX KEY 3/16"		BNH2542	1
108	HEX KEY 5/32"		BNH2545	1
109	HEX KEY ALLOY 1/4"		BNH0375	1
110	HEX KEY ALLOY 3/32"		BNH0372	1
111	HEX KEY ALLOY 7/32"		BNH0575	1

Parts List

Pre-Assembled Components

ITEM	DESCRIPTION	REV.	PART NO.	QTY.	ITEM	DESCRIPTION	REV.	PART NO.	QTY.
*1	REAR UPRIGHT ASSEMBLY	0	UP8071X1	1	*11	REAR SHROUD, LEFT SIDE ASSEMBLY	0	UP8075X1	1
*2	BASE FRAME, LEFT SIDE ASSEMBLY	0	UP8066X1	1	*12	FRONT SHROUD ASSEMBLY	0	UP8076X1	1
*3	BASE FRAME, RIGHT SIDE ASSEMBLY	0	UP8067X1	1	*13	CARRIAGE, LEFT SIDE ASSEMBLY	0	UP7686X1	1
*5	TOP FRAME, LEFT SIDE ASSEMBLY	0	UP8068X1	1	*14	CARRIAGE, RIGHT SIDE ASSEMBLY	0	UP7685X1	1
*6	TOP FRAME, RIGHT SIDE ASSEMBLY	0	UP8069X1	1	*15	10 LB TOP PLATE W/ADJ SLTR BAR 19 BLK WTS ASSY		BNH1982X3	2
*7	ADJUSTABLE PULLEY BRACKET ASSEMBLY	0	UP8074X1	2	*27	CABLE ASSEMBLY CDP-300	0	UP8078X1	2
*8	CHIN UP CROSS BRACE ASSEMBLY	0	UP8070X1	1	*46	REAR SHROUD, RIGHT SIDE ASSEMBLY	0	UP8075X2	1
*9	ACCESSORY HOLDER TUBE ASSEMBLY	0	UP8077X1	1	*51	10 LB STEEL WEIGHT PLATE BLK 4 9/16 X 9 7/16 ASM		BNH1650	28

Pre-Assembled Components

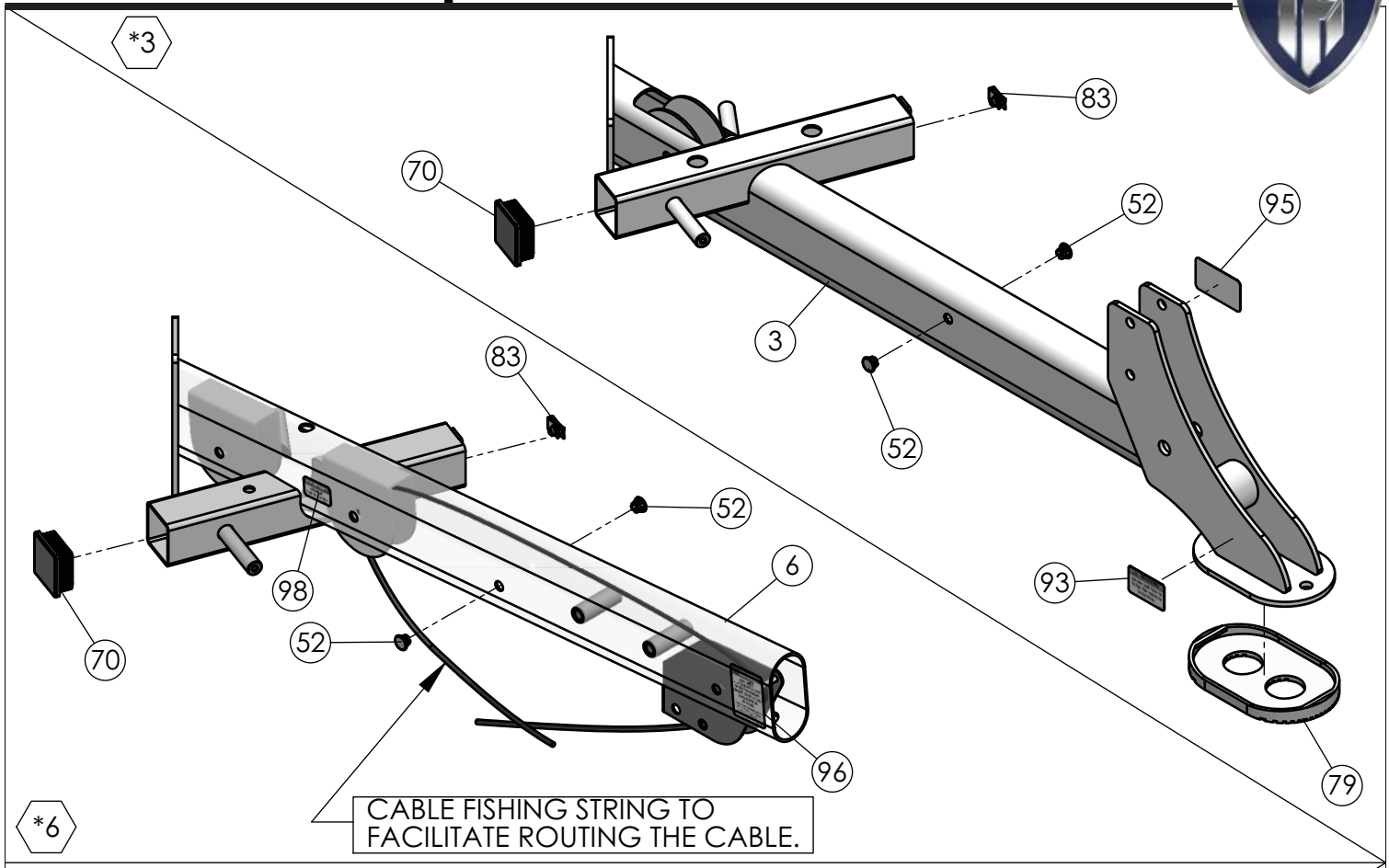

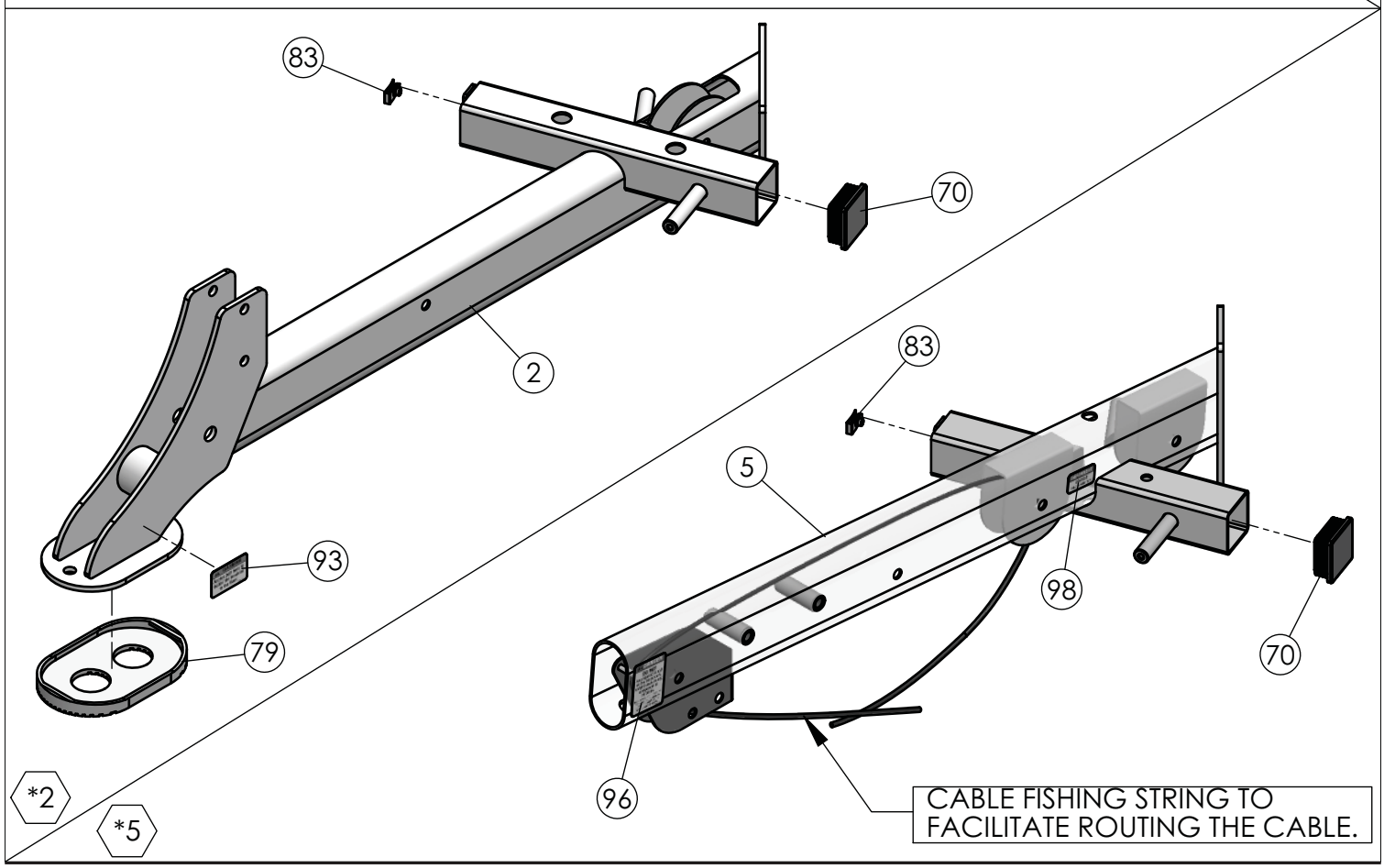

Pre-Assembled Components

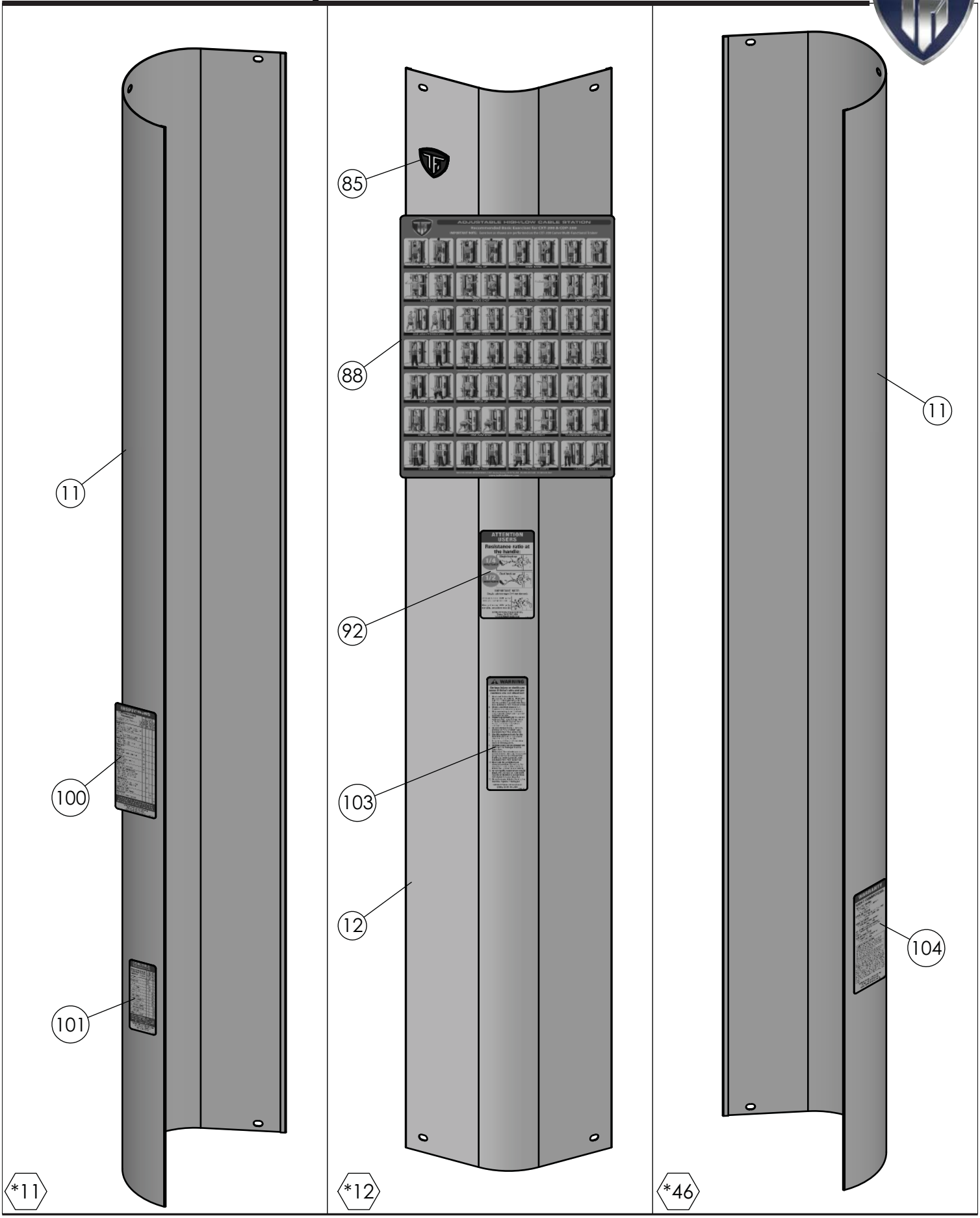

Pre-Assembled Components

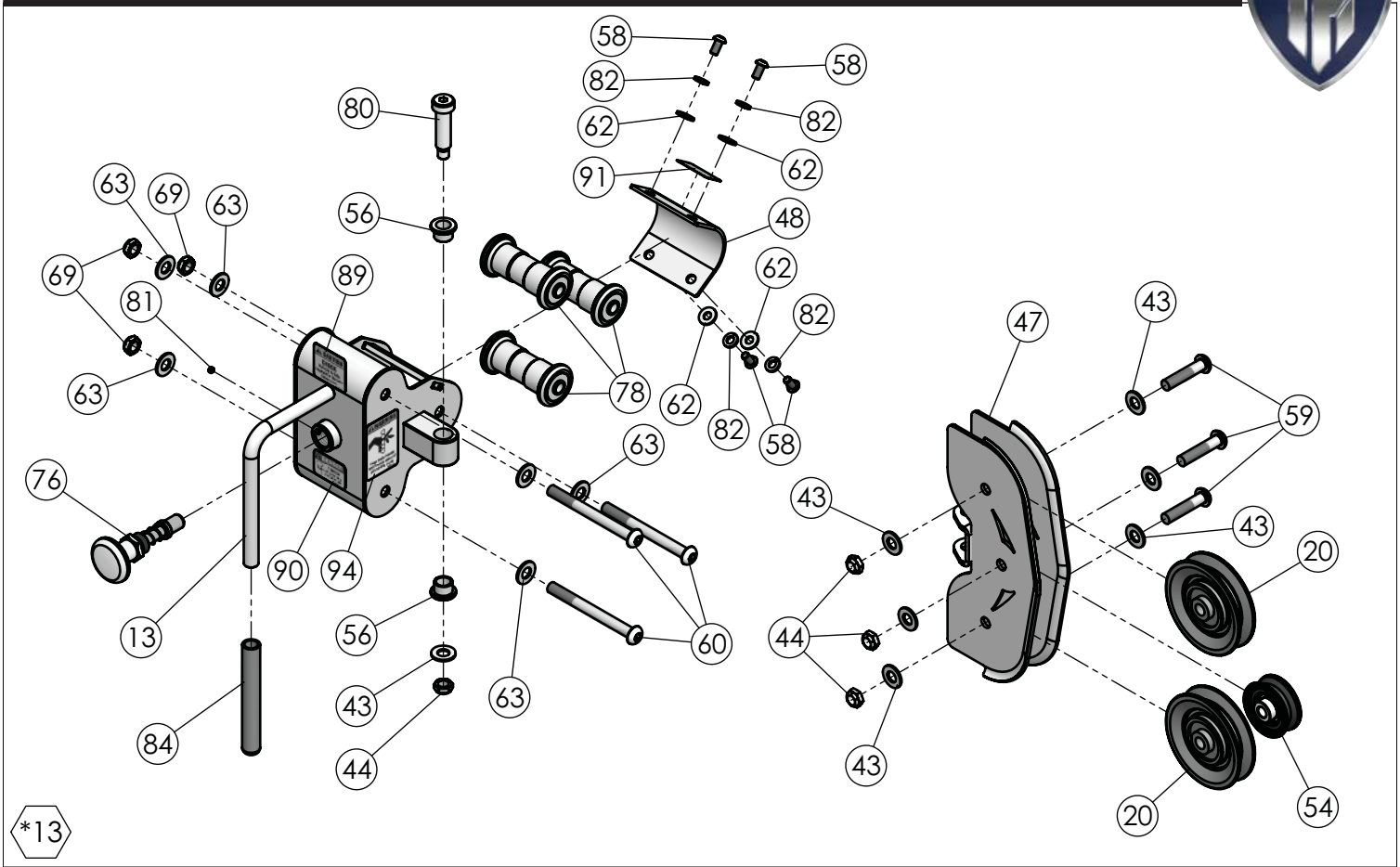

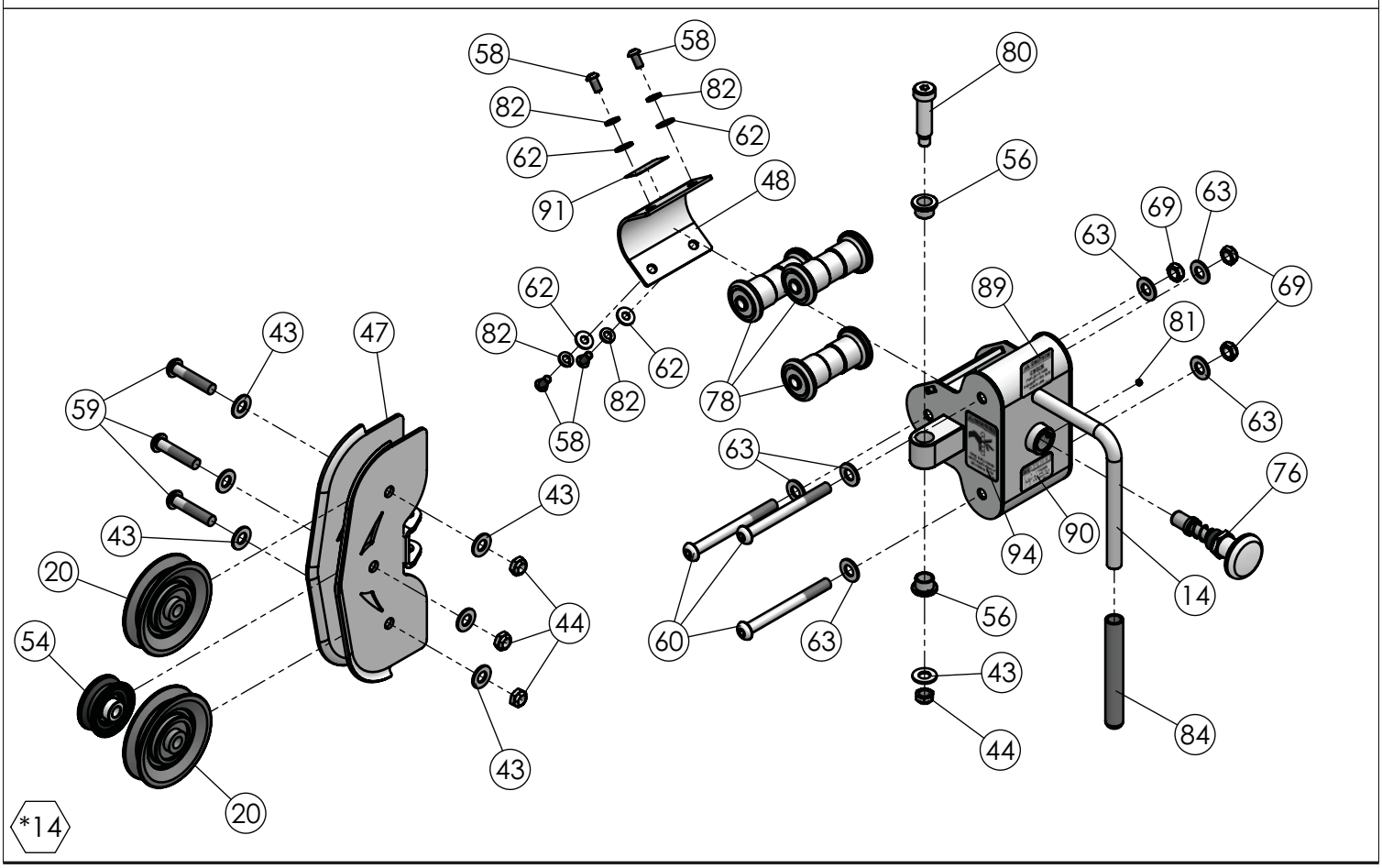

Pre-Assembled Components

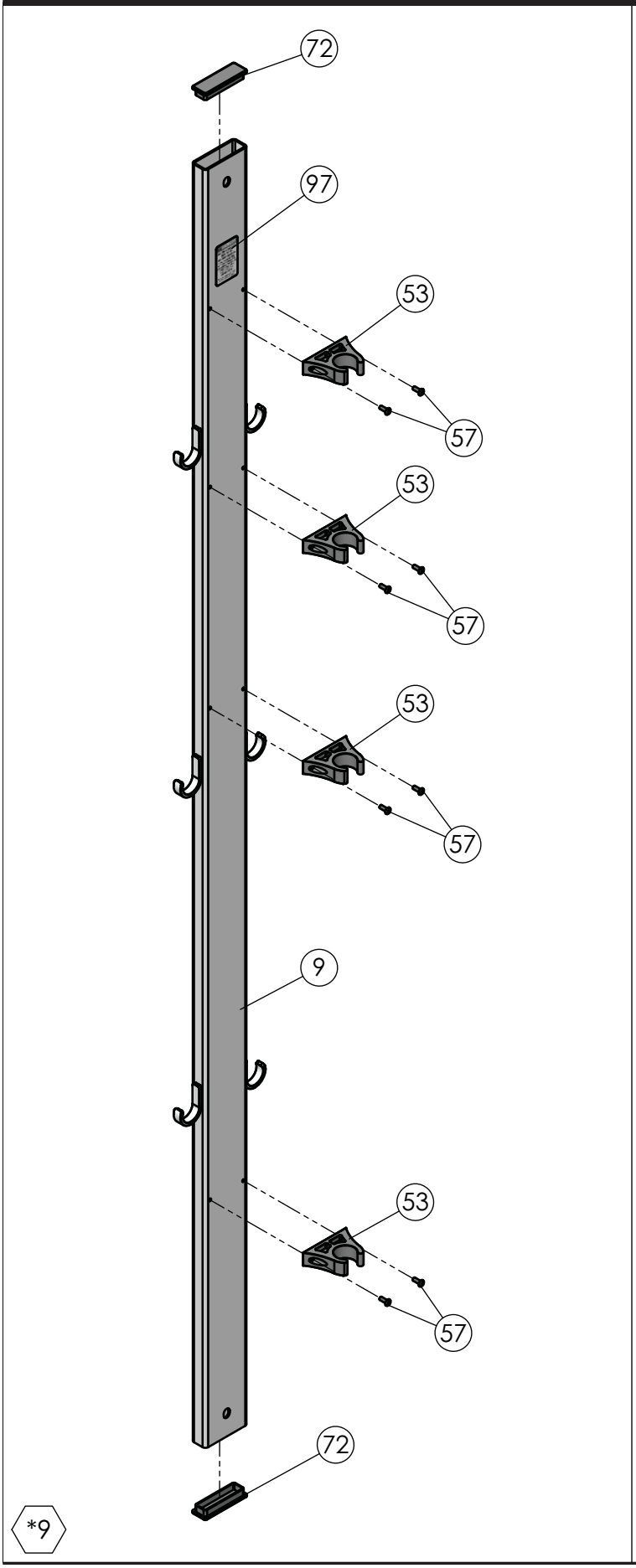

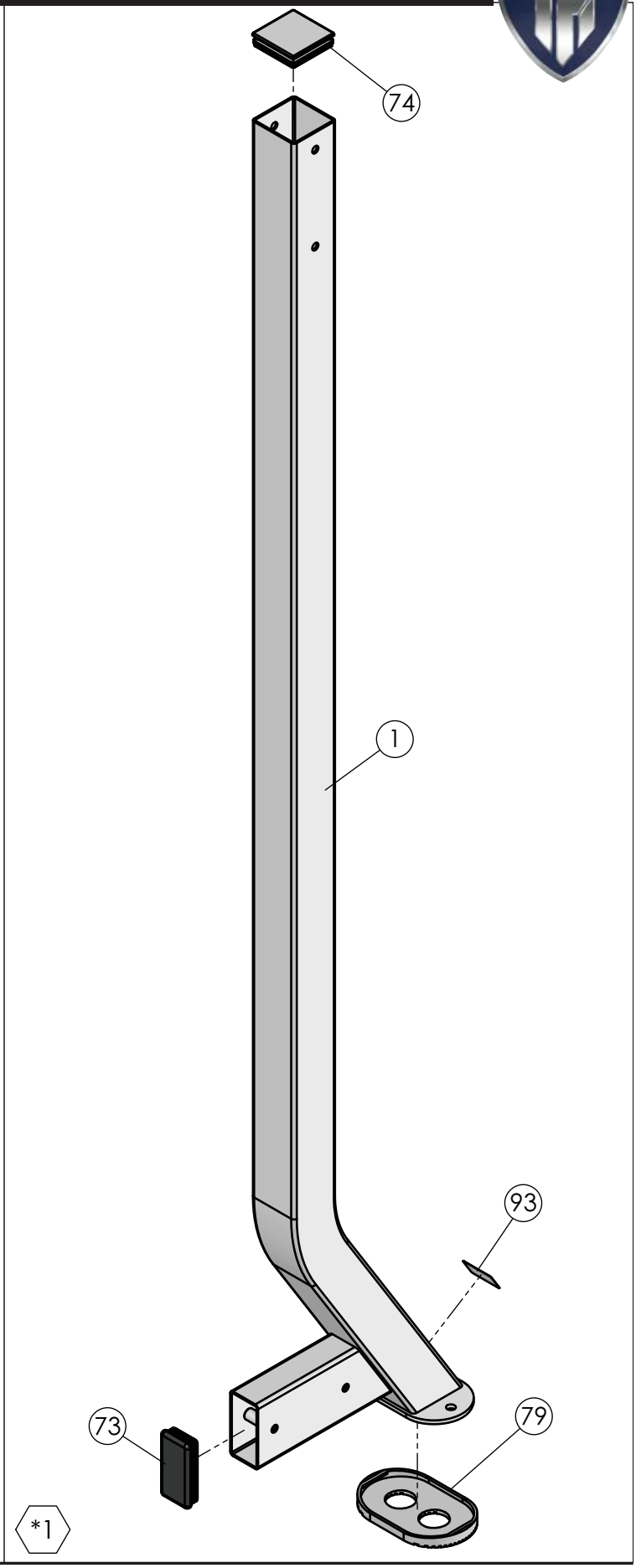

Pre-Assembled Components

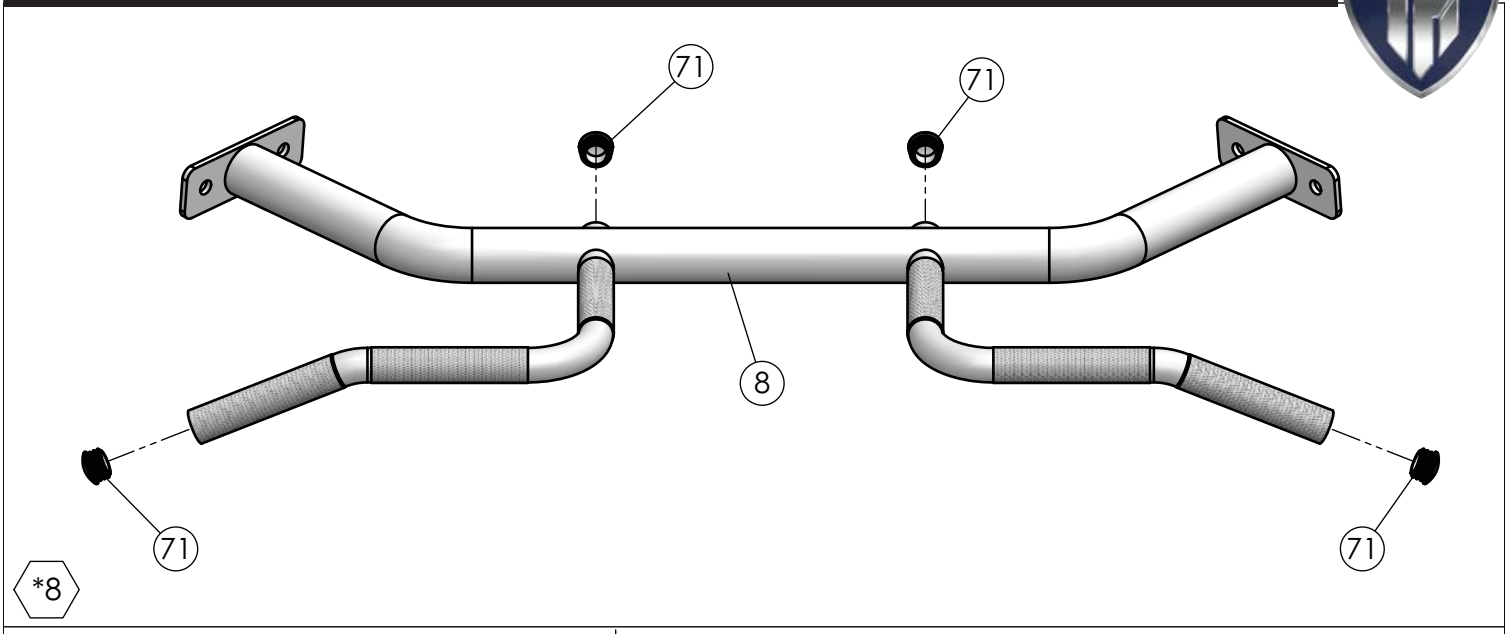

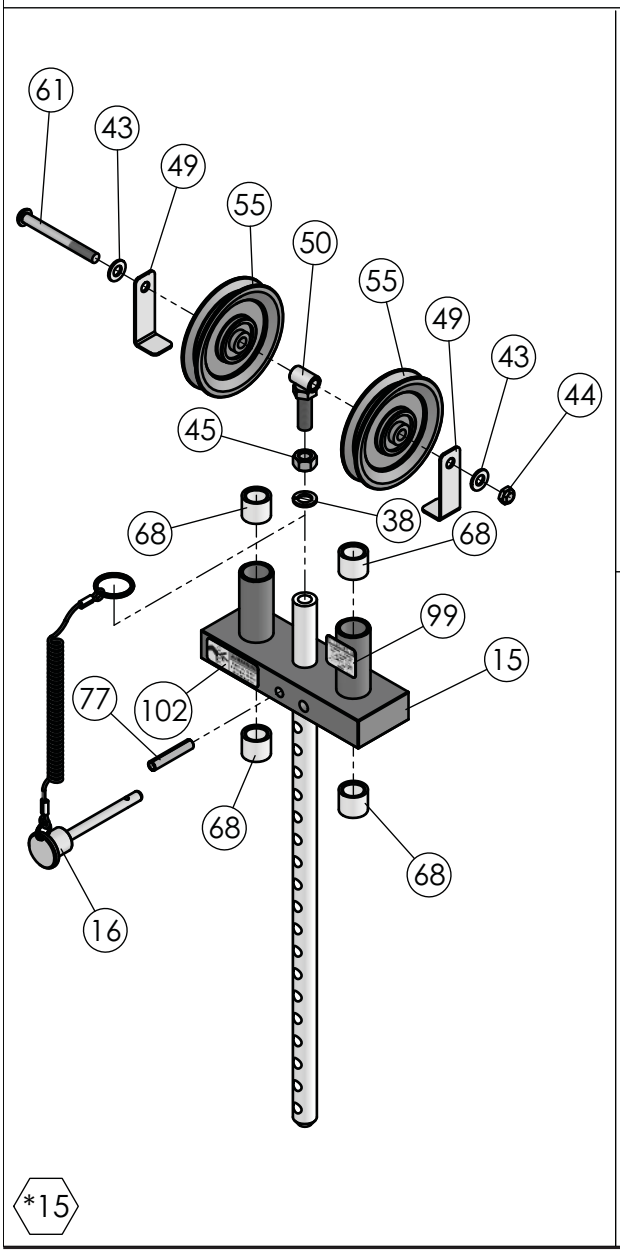

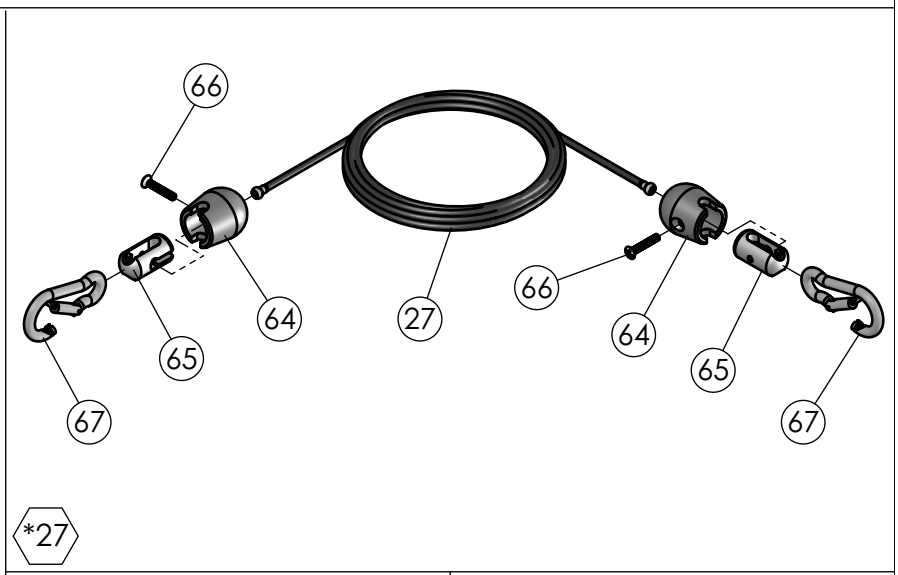

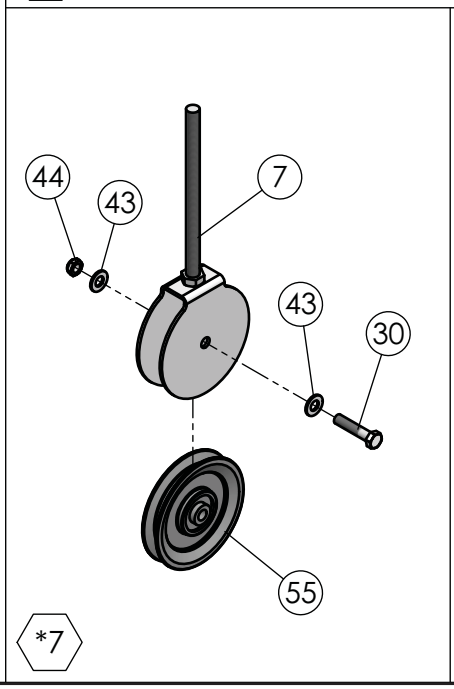

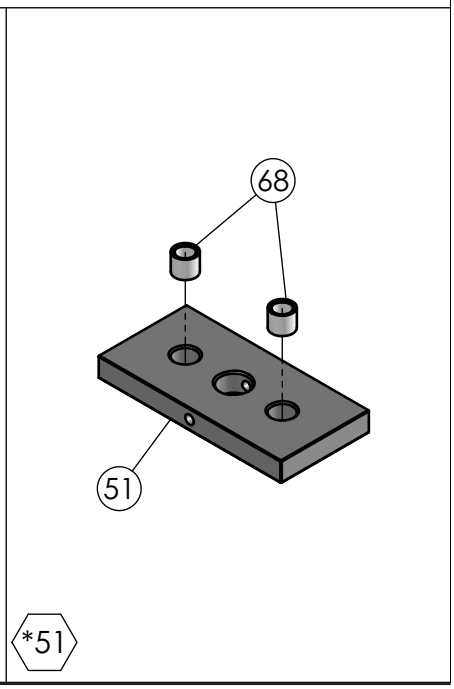

N o t e s

LIGHT COMMERCIAL WARRANTY

This warranty applies only in the United States to the products manufactured or distributed by TuffStuff Fitness International (TFI) under the TuffStuff brand name. TFI warrants to the original purchaser that TuffStuff equipment will be free from defects in material and workmanship. All warranty periods begin to run from the date of purchase to the original purchaser. The warranty and remedies set forth herein are conditioned upon proper storage, installation, use and maintenance and conformance with any recommendations of TFI. This warranty does not cover products not manufactured by TFI or products which are altered without the express written consent of TFI.

LIGHT COMMERCIAL WARRANTY:

TEN (10) Years: Structural main frames, welds, cams and weight plates.

FIVE (5) Years: Pivot bearings, pulleys, bushings, guide rods and gas shocks.

ONE (1) Year: Belts, linear bearings and pull-pin components.

All other parts not mentioned elsewhere in the warranty will expire one (1) year from the date of purchase to the original purchaser.

SIX (6) Months: Upholstery, cables, finish and rubber grips.

Light Commercial Use:
Light Commercial Warranty applies to facilities like hotels, apartment complexes, personal training studios, fire & police stations, etc. where the equipment would be used by no more than 30 people per day.

HOME LIFETIME WARRANTY:

LIFETIME of the equipment while owned by the original purchaser (applies only to defects from manufacturer only).

This warranty does not cover:

1. TuffStuff products sold for and used in a commercial or institutional environment.
2. Any damage, failure or loss caused by accident, misuse, neglect, abuse, improper assembly, improper maintenance, or failure to follow instructions or warnings in the owner's manual and warning labels posted on the machines.
3. Use of the product in a manner for which it was not designed.
4. Original product that is altered, or the use of replacement parts and components of another manufacturer other than TuffStuff.

The obligation of TFI under this warranty is limited to repairing or replacing warranted defective parts as TFI may elect, at TFI's facility in Chino, California, without charge to the purchaser. Purchaser is responsible for installation of repaired or replaced parts, and all transportation and insurance costs on returned or replaced equipment to and from TFI's facility in Chino.

THE FOREGOING SHALL CONSTITUTE THE SOLE REMEDY OF THE PURCHASER AND THE SOLE LIABILITY OF TFI WITH REGARD TO WARRANTY. NO IMPLIED STATUTORY WARRANTY OR IMPLIED STATUTORY WARRANTY OF MERCHANTABILITY OR FITNESS FOR A PARTICULAR PURPOSE SHALL APPLY. IN NO EVENT, WHETHER AS A RESULT OF BREACH OF CONTRACT, WARRANTY, NEGLIGENCE OR OTHERWISE, SHALL TFI BE LIABLE FOR SPECIAL, INCIDENTAL OR CONSEQUENTIAL DAMAGES INCLUDING, BUT NOT LIMITED TO, LOSS OF PROFITS OR REVENUE, LOSS OF USE OF EQUIPMENT, COST OF CAPITAL, COST OF SUBSTITUTION EQUIPMENT, DOWNTIME COST, OR CLAIMS OF CUSTOMERS OR PURCHASER FROM SUCH DAMAGE.

This written warranty is the final, complete and exclusive agreement of the parties with respect to the quality or performance of the equipment and no action for breach of this written warranty or any implied warranty shall be commenced more than one (1) year after the accrual of the cause of action. No modification of this warranty or waiver of its terms shall be binding on either party unless approved in writing by an authorized representative of the party. Contact TuffStuff Fitness International at 13971 Norton Avenue, Chino, CA 91710, before returning any defective equipment.

This warranty gives you specific legal rights and you may also have other rights, which may vary from state to state.

SERIAL # _____

Write your Serial number here for future reference

_____

Purchase Date

TuffStuff Fitness International, Inc.
13971 Norton Avenue, Chino, CA 91710, USA Phone: 909-629-1600 Fax: 909-629-4967
www.tuffstuffitness.com service@tuffstuff.net or service1@tuffstuff.net