OWNER'S MANUAL

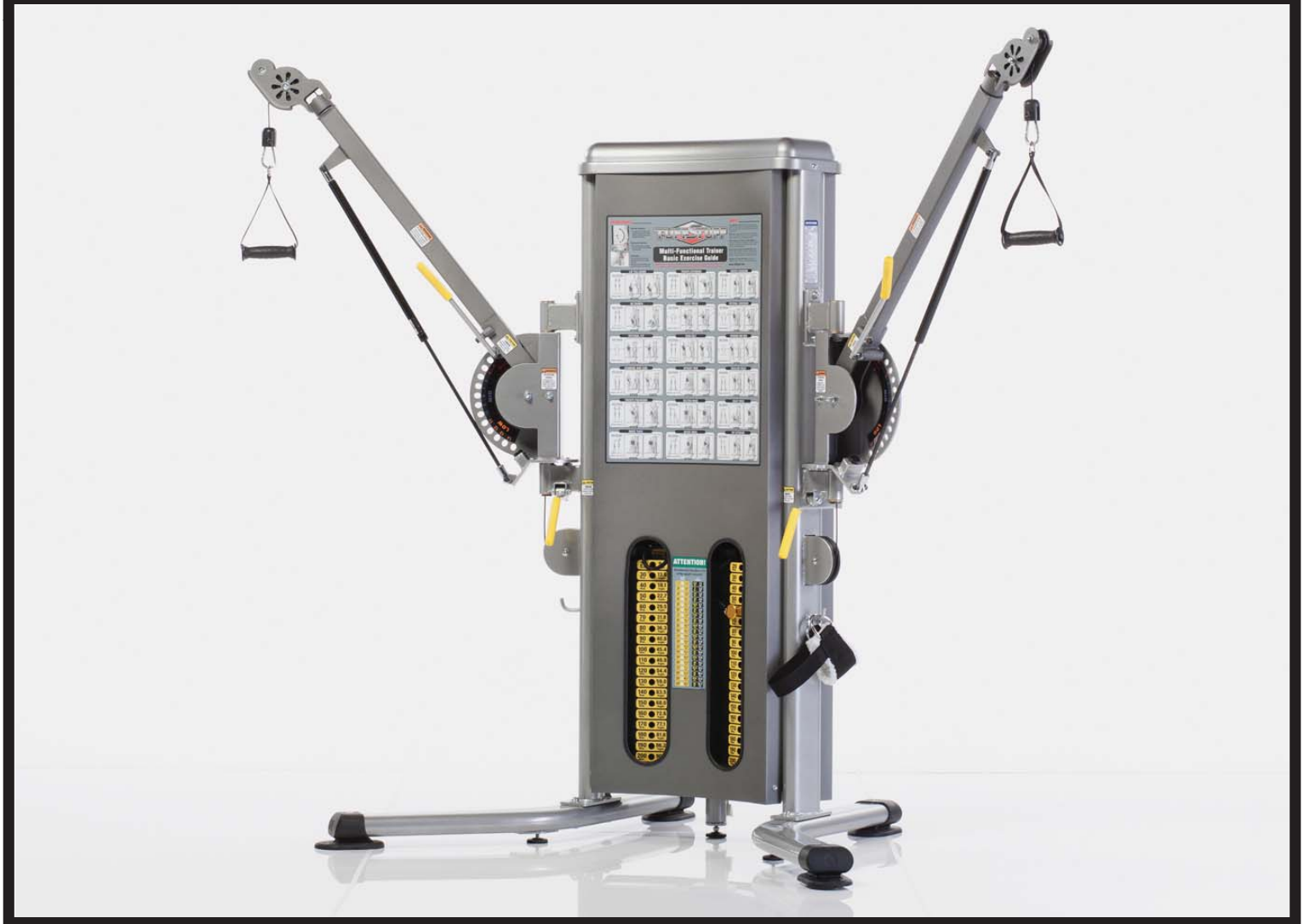

NOTICE

It is the Purchaser's/Owner's obligation:

1. To disclose and post all Rules & Regulations, Danger, Warning and Caution labels affixed on the machine to their customers/users.
2. Equipment to be installed by TuffStuff Authorized Dealer or a service company approved by TuffStuff.
3. Provide trained personnel, supervision and correct usage of the equipment.
4. Provide scheduled inspection, maintenance & repairs and must be performed by TuffStuff Authorized Dealer or a service company approved by TuffStuff.
5. Must use only genuine TuffStuff replacement parts.
6. ⚠ **WARNING** Machine must be anchored to a solid and level surface.

MFT-2700

Multi-Functional Trainer

MFT-2700_Rev1
Revision Date 8-26-14

IMPORTANT: KEEP THIS MANUAL FOR FUTURE REFERENCE

Table of Contents

DANGER, WARNING, & CAUTION LABELS INFORMATION .....Page 3-5
ANCHORING UNIT .....Page 6
IMPORTANT SAFETY INSTRUCTIONS.....Page 7
REGISTRATION, SERVICE & ASSEMBLY.....Page 8
INSPECTION/MAINTENANCE.....Page 9
CABLE INSPECTION.....Page 10
STEP 1 .....Page 11
STEP 2 .....Page 12-13
STEP 3 .....Page 14-15
STEP 4 CABLE ROUTING .....Page 16
STEP 5 CABLE ROUTING .....Page 17
STEP 6 .....Page 18
STEP 7 .....Page 19
STEP 8 .....Page 20
NOTES.....Page 21
PARTS LIST.....Page 22
EXPLODED VIEW .....Page 23
BASIC EXERCISE GUIDE.....Page 24
BASIC EXERCISE GUIDE.....Page 25
BASIC EXERCISE GUIDE.....Page 26
WARRANTY .....Page 27

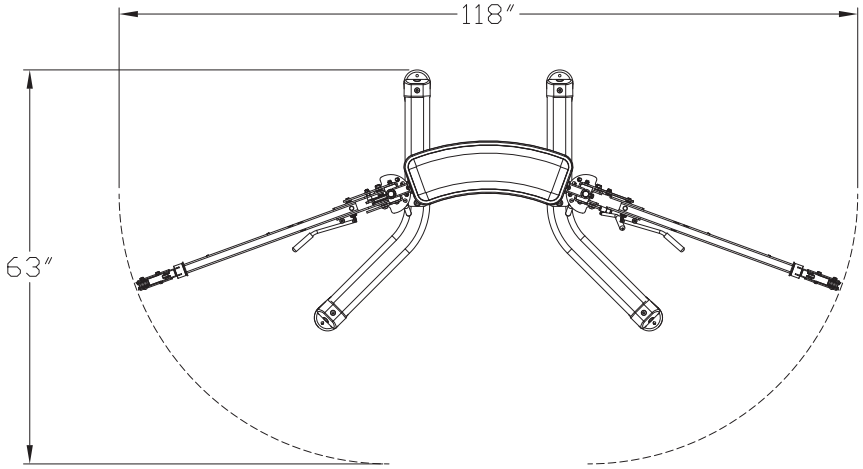

L 118″ X W 63″ X H 82″
TOTAL WEIGHT 645 LBS

TuffStuff Fitness Equipment Inc. continually engages in research related to product improvements. Please take the time to carefully read through this manual thoroughly. Instructions contained in this manual are not intended to cover all details or variations possible with equipment, or to cover every contingency that may be met in conjunction with assembly, installation, operation, maintenance or troubleshooting of the equipment. Eventhough we have prepared this manual with extreme care, neither the manufacturer nor the author can accept responsibility for any errors in, or omission from, the information given. Should additional information be required, or should situations arise that are not covered by this manual, the matter should be directed to Customer Service at TuffStuff Fitness Equipment Inc. in Chino, California.

Carefully read ALL Danger, Warning & Caution labels posted on the machine

NOTE:
1. LABEL (G) GOES BEHIND THE ARM.
2. LABEL (S) GOES ON THE REAR SHIELD (#11).

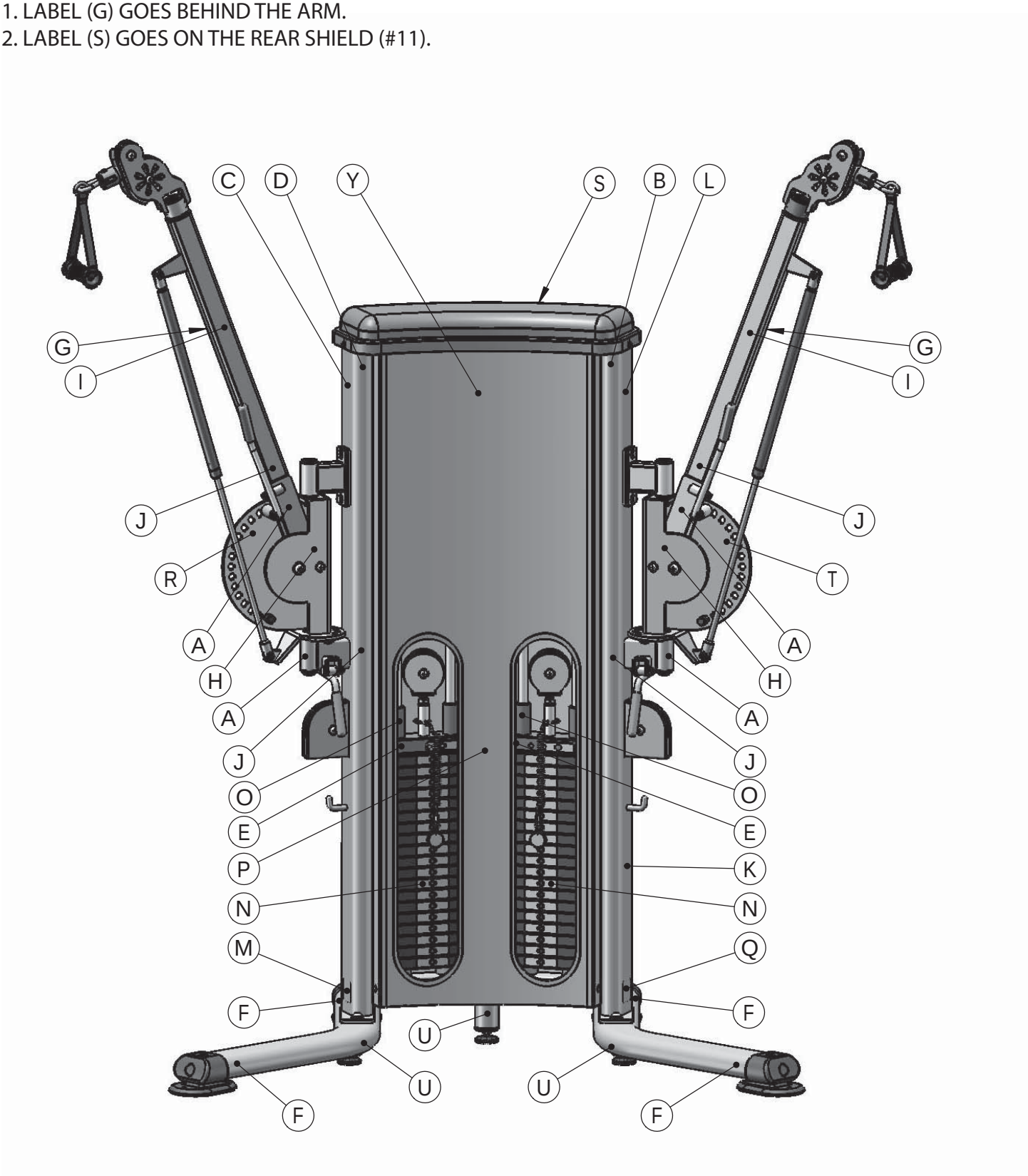

Carefully read ALL Danger, Warning & Caution labels posted on the machine

A

DANGER

CHECK retaining nut.
Must be fully fastened or could cause the pin to pull loose and disengage.
BNH2902

B

DANGER

Use this equipment ONLY for its intended purpose.
If you are unfamiliar with the equipment or procedure, refer to your Owner's Manual or call TuffStuff at 888-884-8275.
Failure to comply could result in serious injury or death.
BNH2903

J

CAUTION

CHECK
Pull-pin is fully engaged in the hole before use.
BNH2912

C

WARNING

Serious injury or death can occur if these rules are not observed:

1. **Read and Understand** Owner's Manual (if available) and all DANGER, WARNING and CAUTION labels before using this equipment. If you still need help, seek assistance from floor personnel.
2. Obtain a **medical exam** before beginning any exercise program.
3. **Stop exercising** if you feel faint or dizzy. Consult a physician if you are experiencing pain.
4. **Inspect equipment** prior to use for wear and tear, loose fittings, worn or frayed cables/belts and frame welds. Do not use if it appears damaged or inoperable.
5. **Do not attempt to fix** or free any jammed parts by yourself. Seek assistance from floor personnel.
6. **Use this equipment only for the intended use** and for exercise(s) shown in the exercise label.
7. Keep body, clothing and hair **clear from all moving parts.**
8. **Children must not be allowed** near this machine. Teenager must be supervised.
9. **Make sure the selector pin** is completely inserted. Use only the selector pin provided by the manufacturer. If difficulty inserting the pin, seek assistance from floor personnel.
10. **Never pin the weights in an elevated position.** Do not use the machine if found in this condition. Inform floor personnel immediately.
11. **Do not modify selectorized weight stack** with any add-on incremental weights or dumbbells, except those with standard factory installed.
12. **Do not remove labels** affixed to the machine. Replace if damaged.

TuffStuff Fitness Equipment Inc.
Chino, CA 91710, USA
BNH2939

E

WARNING

Keep body, hands and fingers clear of all moving parts.
BNH2926

G

WARNING

Keep body, hands and fingers clear of all moving parts.
BNH2909

U

CAUTION

Adjust leveler to 1/16" above the floor surface.
LEVELER – adjust here
BNH2967

K

WARRANTY

LIGHT COMMERCIAL

TEN (10) YEARS:
- Frames, welds, cams and weight plates

FIVE (5) YEARS:
- Pivot bearings, pulleys, bushings, gas shocks and guide rods

ONE (1) YEAR:
- Belts, linear bearings and pull-pin components

ALL OTHER PARTS not mentioned, one year from the date of delivery to the original purchaser.

SIX (6) MONTHS:
- Upholstery, cables, finish and rubber grips

Light Commercial Use:
Light Commercial warranty applies only to facilities like hotels, apartment complexes, personal training studios, fire & police stations, etc. where the equipment would be used by no more than 30 people per day.
Refer to the Owner's Manual for details, assembly & maintenance requirements, review and understand all danger, warning and caution labels.

All warranty periods begin to run from the date of delivery to the original purchaser. The obligation of TuffStuff under this warranty is limited to repairing or replacing warranted defective parts, as TuffStuff may elect, at TuffStuff's facility in Chino, California, without charge to the Purchaser for either parts or labor. Purchaser is responsible for installation of repaired or replaced parts, and all transportation and insurance costs to and from TuffStuff's facility in Chino. For a detailed copy of the warranty, please contact:

TuffStuff Fitness Equipment Inc.
Chino, CA 91710, USA
www.tuffstuffitness.com
BNH3008

M

SCHEDULE
Replacement Parts

Recommended TuffStuff Parts (replace or as needed)	9-MONTH	12-MONTH	15-MONTH
Cables		X	
Rubber Grips		X	
Ergo Handles			X
Ankle Strap			X
Push/Pull-Pin			X
Weight Selector Pin			X
Label (as needed)			

Use only genuine TuffStuff parts. Failure to do so will void warranty and could result in personal injury. Warranty period on all parts are one (1) year from date of purchase.

TuffStuff Fitness Equipment Inc.
Chino, CA 91710, USA
BNH2965

I

WARNING

ATTENTION USERS!
Moving parts – BE AWARE of your body, hands and fingers when making the adjustment.
BNH2911

O

IMPORTANT

For smooth performance, clean guide rods with Super Lube® spray lubricant and lubricate with Super Lube® (PTFE) grease.
BNH2925

Q

TUFFSTUFF FITNESS

TuffStuff Fitness Equipment. Inc.
13971 Norton Avenue, Chino, CA 91710, USA
PH: 909-629-1600 FX: 909-629-4967
service@tuffstuff.net www.tuffstuffitness.com
MFT-2700
Serial # 000-0000

L

INSPECTIONS

Recommended Inspection Replace all parts at first signs of wear or damage.	DAILY	WEEKLY	MONTHLY	6-MONTH	YEARLY
INSPECT: Links, pull-pins, snap locks, swivels, connectors, selector pin, and welded-joints.	X				
CLEAN: Upholstery with lanolin-base cleaner. Do not use Windex.	X				
INSPECT: Cables, Belts and tension (adjust if needed).	X				
INSPECT: All labels		X			
INSPECT: All nuts and bolts (tighten if needed).		X			
INSPECT: Accessory bars, handles, rubber grips.		X			
INSPECT: All anti-skid surfaces.		X			
CLEAN & LUBRICATE: Clean guide rods with Super Lube® spray lubricant and lubricate with Super Lube® (PTFE) grease.			X		
LUBRICATE: Seat sleeves, pull-pin sliding mechanism, bushings and linear bearings.			X		
CLEAN & WAX: All powder-coat finishes.				X	
REPLACE: Cables & connecting parts.					X

Use only genuine TuffStuff replacement parts. Failure to do so will void warranty and could result in serious injury or death.

TuffStuff Fitness Equipment Inc.
Chino, CA 91710, USA
www.tuffstuffitness.com BNH2922

D

DANGER

DO NOT lean against or pull on the framework, weight stack or any component at all times.
Inappropriate or improper use can cause the machine to tip over, and could result in serious injury or death.
BNH2955

F

WARNING

Anchor bolt here to fasten the machine to the floor.
BNH2966

Carefully read ALL Danger, Warning & Caution labels posted on the machine

H

WARNING

ATTENTION USERS!

Moving parts – BE AWARE of your body, hands and fingers when making the adjustment.

BNH2910

S

TUFFSTUFF®

FITNESS

P

ATTENTION!

Resistance at Handle is 1/4 of the weight selected.

WEIGHT STACK		AT HANDLE	
TOP PLATE 10 lbs.	TOP PLATE 4.5 kgs.	2.5 lbs.	1.1 kgs.
20 lbs.	9.0 kgs.	5 lbs.	2.3 kgs.
30 lbs.	13.6 kgs.	7.5 lbs.	3.4 kgs.
40 lbs.	18.1 kgs.	10 lbs.	4.5 kgs.
50 lbs.	22.7 kgs.	12.5 lbs.	5.7 kgs.
60 lbs.	29.5 kgs.	15 lbs.	6.8 kgs.
70 lbs.	31.8 kgs.	17.5 lbs.	7.9 kgs.
80 lbs.	36.3 kgs.	20 lbs.	9.0 kgs.
90 lbs.	40.8 kgs.	22.5 lbs.	10.2 kgs.
100 lbs.	45.4 kgs.	25 lbs.	11.3 kgs.
110 lbs.	49.9 kgs.	27.5 lbs.	12.5 kgs.
120 lbs.	54.4 kgs.	30 lbs.	13.6 kgs.
130 lbs.	59.0 kgs.	32.5 lbs.	14.7 kgs.
140 lbs.	63.5 kgs.	35 lbs.	15.9 kgs.
150 lbs.	68.0 kgs.	37.5 lbs.	17.0 kgs.
160 lbs.	72.6 kgs.	40 lbs.	18.1 kgs.
170 lbs.	77.1 kgs.	42.5 lbs.	19.3 kgs.
180 lbs.	81.6 kgs.	45 lbs.	20.4 kgs.
190 lbs.	86.2 kgs.	47.5 lbs.	21.5 kgs.
200 lbs.	90.7 kgs.	50 lbs.	22.7 kgs.

BNH2936

N

TOP PLATE 10 lbs.	TOP PLATE 4.5 kgs.
20 lbs.	9.0 kgs.
30 lbs.	13.6 kgs.
40 lbs.	18.1 kgs.
50 lbs.	22.7 kgs.
60 lbs.	29.5 kgs.
70 lbs.	31.8 kgs.
80 lbs.	36.3 kgs.
90 lbs.	40.8 kgs.
100 lbs.	45.4 kgs.
110 lbs.	49.9 kgs.
120 lbs.	54.4 kgs.
130 lbs.	59.0 kgs.
140 lbs.	63.5 kgs.
150 lbs.	68.0 kgs.
160 lbs.	72.6 kgs.
170 lbs.	77.1 kgs.
180 lbs.	81.6 kgs.
190 lbs.	86.2 kgs.
200 lbs.	90.7 kgs.

Y

R

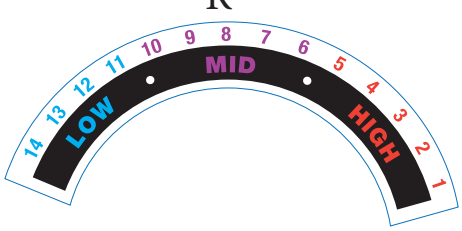

T

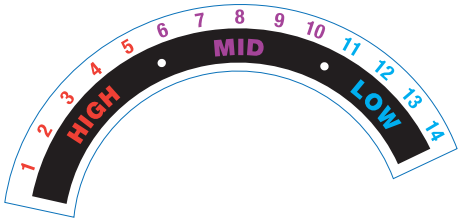

BE ALERT!

THE FITNESS EQUIPMENT IN THIS FACILITY PRESENTS HAZARDS WHICH, IF NOT AVOIDED, COULD CAUSE SERIOUS INJURY OR DEATH.

Prior to using the equipment, READ the warning labels and instruction placards affixed to each machine.

If you are unsure on how to use a machine, seek the assistance of our floor personnel. We will be happy to instruct you on how to use the equipment properly.

Immediately report any piece of equipment that is not functioning properly to our floor personnel so that it may be evaluated and service promptly.

DO NOT ATTEMPT to use or fix any piece of equipment that is not functioning properly.

ASTM F1749-96 TUFFSTUFF FITNESS EQUIPMENT INC. CHINO, CA 91710

BNH3002

It is extremely important that the **Facility Sign** shown to the left be installed in plain view of the unit.

You should have received it along with this Owners Manual. If you did not receive this Facility Sign with your order, you can obtain one at no cost to you from TuffStuff Fitness by contacting our service department at:

1 (888) 884-8275
service@tuffstuff.net
service1@tuffstuff.net

Anchoring Unit

Holes on shoe plates are provided for anchoring the unit to the floor. (See anchoring hole locations below)

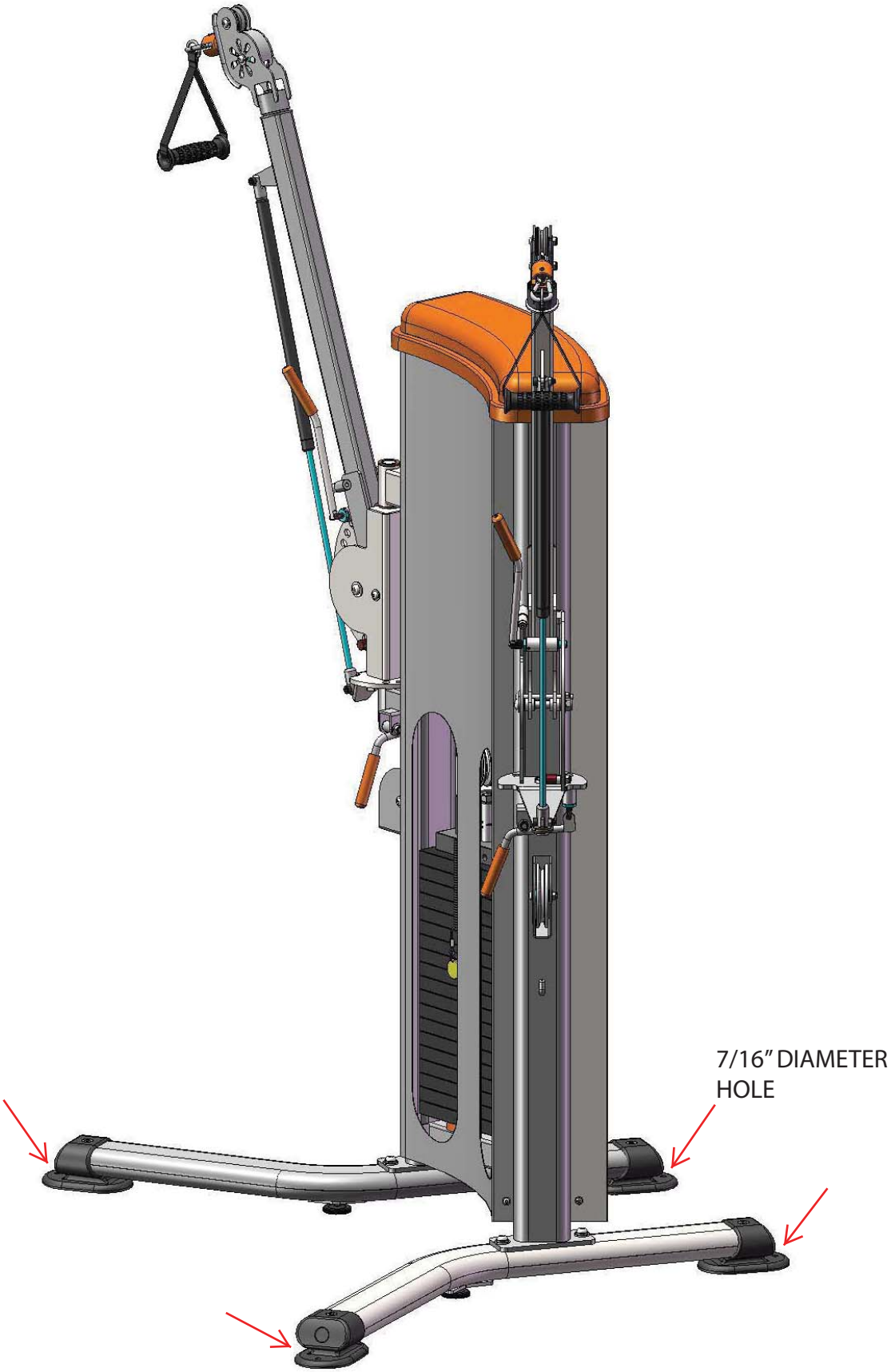

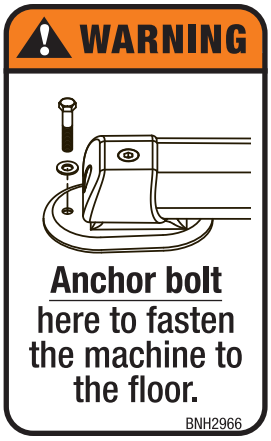

Important Safety Instructions

It is the responsibility of the facility owner and/or owner of the equipment to review the Owner's Manual with their facility personnel and understand all Danger, Warning and Caution labels affixed on the machine. It is the responsibility of the floor personnel to instruct users on proper operation of the equipment and review all danger, warning and caution labels.

⚠ WARNING SERIOUS INJURY OR DEATH CAN OCCUR IF THESE SAFETY PRECAUTIONS ARE NOT OBSERVED:

1. Obtain a medical exam before beginning any exercise program.
2. Read and understand Owner's Manual and all **Danger, Warning and Caution** labels before using this equipment. If you still need help, seek assistance from floor personnel.
3. **Inspect the equipment** before each use for wear and tear, loose fittings, worn or frayed cables and frame welds. DO NOT USE if it appears to be inoperable or damaged.
4. Stop exercising if you feel faint or dizzy. Consult a physician if you are experiencing pain.
5. **Use this equipment only for the intended use and for exercise(s) shown on page 24-26.**
6. Keep body, clothing and hair clear from all moving parts. Do not attempt to free any jammed parts by yourself.
7. Always warm-up before and cool-down after weight training. Warm-up for 10-15 minutes with stretching and cardiovascular exercises. Cool-down should include light stretching exercises for 5-15 minutes.
8. Never hold your breath – will limit the flow of oxygen to your brain and may cause dizziness. The most often used breathing pattern is inhaling during least resistance and exhaling during maximum resistance.
9. Do not use accessories or accessory attachments that are not recommended by TuffStuff.
10. Make sure selector pin is completely inserted. Use only the selector pin provided by the manufacturer.
11. Never pin the weights in an elevated position. Do not use the machine if found in this condition.

Facility Safety Guidelines and Practices

1. Read and understand the Owner's Manual before assembling, servicing or using the equipment.
2. Equipment to be installed by TuffStuff Authorized Dealer or Professional Service Company approved by TuffStuff.
3. Make sure each machine is set up and operated on a solid level surface. Do not install equipment on an uneven surface.
4. **Anchoring of equipment must be completed** at time of installation and inspected prior to use. Failure to anchor the machine to the floor could cause the machine to tip or fall over due to incorrect usage and misuse, and could result in serious injury or death.
5. Provide an adequate safety perimeter between the machine, walls and other equipment to ensure that the facility has proper clearance for usage and training.
6. Post and disclose all safety, rules and regulations on a bulletin board easily accessible to users.
7. Perform regular maintenance (see Inspection Label). Pay special attention to areas most susceptible to wear and tear, including but not limited to cables, pulleys and rubber grips.
8. **Do not** lean against or pull on the framework, weight stack or any component at all times.
9. **Children must not** be allowed near the equipment. Teenager must be supervised.
10. Replace immediately all parts at first sign of wear or damage. If unable to replace worn or damaged components/parts, remove machine from service until the repair is made.
11. Use only genuine TuffStuff replacement parts. Failure to do so will void warranty and could result in serious injury or death to the users.
12. **Do not remove** any decals affixed to the machine. Replace if damaged.
13. Do not alter or modify the original manufacturer's **200 lbs**. weight stack with any add-on incremental weights, weight plates or dumbbells except those with standard factory installed option.
14. Maintain a service contract with a TuffStuff Authorized Dealer or a Professional Service Company approved by TuffStuff. Keep a service log of all maintenance and repair activities. NOTICE: It is the sole responsiblity of the owner or facility operator to ensure that regular maintenance is performed.

⚠ DANGER

DANGER: indicates an imminently hazardous situation which, if not avoided, will result in death or serious injury.

⚠ WARNING

WARNING: indicates a potentially hazardous situation which, if not avoided, will result in death or serious injury.

⚠ CAUTION

CAUTION: indicates a hazardous situation which, if not avoided, could result in minor or moderate injury.

Registration, Service & Assembly

Thank you for purchasing the MFT-2700 Multi-Functional Trainer. This machine is part of the TuffStuff line of quality strength training equipment. To maximize your use of the equipment, please study the Owner's Manual thoroughly.

Registration

To avoid unnecessary delays on warranty parts and to insure that a permanent record of your purchase is on file with our company, be sure to register online at www.tuffstuffitness.com or mail to address shown below within 10 days of purchase.

Obtaining Service

Please use this Owner's Manual as your guide to all parts included in your shipment. When ordering parts, you must specify the part number and description from this manual. **Use only genuine TuffStuff replacement parts when servicing the equipment.** Failure to do so will void warranty and could result in serious injury or death.

For information about product operation or service:

Phone:	909-629-1600 Toll Free 888-884-8275
Fax:	909-629-4967
E-mail:	service@tuffstuff.net or service1@tuffstuff.net
Hours:	M–F 8:00 – 4:30 PST
Or write to:	TuffStuff Fitness Equipment Inc. Customer Service 13971 Norton Avenue, Chino, CA 91710

Retain this Owner's Manual for future reference when ordering service or parts. To assist you better, please be prepared to provide the following information:

1. Model Number **2. Place of Purchase**
3. Serial Number **4. Part # and Description**

Required Tools

The basic tools that you will need to assemble the MFT-2700 but are not limited to:

- 9/16", 3/4", 1/2" combination wrenches
- Adjustable wrench
- Ratchet wrench with 9/16", 3/4", 1/2" sockets
- External retaining ring pliers
- Rubber mallet, measuring tape & utility knife
- Super Lube® spray lubricant and grease
- Windex or household glass cleaner

Assembly Requirements

Follow these installation requirements when assemblying the MFT-2700. Use the overhead view on the Content Page to layout your floor plan before assemblying.

Set up the MFT-2700 on a clean, solid, flat surface. A smooth, flat surface under the machine helps keep it level.

Allow ample space around the machine for safe unrestricted use andeasier access.

Insert all bolts in the same direction. For aesthetic appearance, insert all bolts in the same direction unless specified (in text or illustration) to do otherwise.

Leave room for adjustments. Do not fully tighten fasteners until instructed in the assembly steps to do so (to prevent any difficulty with alignment of parts during the assembly process). When not instructed, tighten fasteners such as bolts, nuts and screws so the unit is stable, but leave room for adjustments.

Assembly Tips

Read all "Notes" on each page before beginning each step.

While you may be able to assemble the MFT-2700 using the illustrations only, IMPORTANT safety notes and other tips are included in the text.

Some pieces may have extra holes that you will not use. Use only those holes indicated in the instructions and illustration.

NOTE: With so many assembled parts, proper alignment and adjustment is critical. While tightening the nuts and bolts, be sure to leave room for final adjustments.

CAUTION: Obtain assistance from TuffStuff if you have difficulty assemblying the MFT-2700. Please do not attempt to complete the assembly as this could result in equipment failure and serious injuries to the users.

Symbols & Description

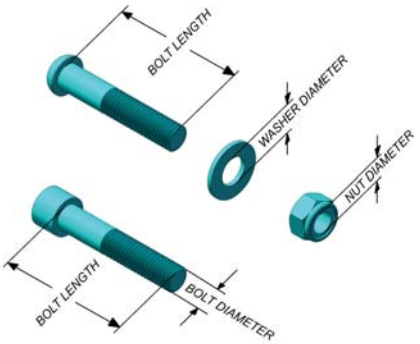

Loosely Fasten
Finger tighten all hardware in this step. DO NOT wrench tighten. Some component(s) may need pre-assembly and alignment during the assembly process.

Fully Fasten
Wrench tighten all hardware in this step.

Inspection/Maintenance

Perform regular maintenance (see Inspection Label). Pay special attention to areas most susceptible to wear and tear, including but not limited to cables, pulleys and rubber grip. TuffStuff recommends you maintain a service contract with a TuffStuff Authorized Dealer or a Professional Service Company approved by TuffStuff. Keep a service log of all maintenance and repair activities. Extra copies can be downloaded from our website.

INSPECTIONS

Recommended Inspection Replace all parts at first signs of wear or damage.	DAILY	WEEKLY	MONTHLY	6-MONTH	YEARLY
INSPECT: Links, pull-pins, snap locks, swivels, connectors, selector pin, and welded-joints.	X				
CLEAN: Upholstery with lanolin-base cleaner. Do not use Windex.	X				
INSPECT: Cables, Belts and tension (adjust if needed).	X				
INSPECT: All labels		X			
INSPECT: All nuts and bolts (tighten if needed).		X			
INSPECT: Accessory bars, handles, rubber grips.		X			
INSPECT: All anti-skid surfaces.		X			
CLEAN & LUBRICATE: Clean guide rods with Super Lube® spray lubricant and lubricate with Super Lube® (PTFE) grease.			X		
LUBRICATE: Seat sleeves, pull-pin sliding mechanism, bushings and linear bearings.			X		
CLEAN & WAX: All powder-coat finishes.				X	
REPLACE: Cables & connecting parts.					X

Use only genuine TuffStuff replacement parts. Failure to do so will void warranty and could result in serious injury or death.

TuffStuff Fitness Equipment Inc.
Chino, CA 91710, USA
www.tuffstuffitness.com BNH2922

INSPECTION / MAINTENANCE RECORDS

DATE	REPLACEMENT	REPAIRS	INSPECTED BY

WARRANTY REPAIRS

DATE	REPLACEMENT	REPAIRS	INSPECTED BY

WARNING:

THE FOLLOWING CONDITIONS MAY INDICATE A WORN CABLE. REPLACE IMMEDIATELY.

"NECKING", STRECHED CABLE COVERING

A CRACK IN THE CABLE COVER

A TEAR IN THE CABLE COVER

A BREAK ON THE CABLE

CABLE END SLIPPING OUT

IMPORTANT NOTE:

DAMAGED OR WORNED CABLE (AS SHOWN ABOVE) MAY DAMAGE THE PULLEY(S). YOU MUST INSPECT THE PULLEYS AT THIS TIME FOR WEAR AND TEAR. REPLACE IF NEEDED.

Step 1

Assembly List

Item #	Description	Qty.
10	**LEFT STABILIZER**	**1**
14	**RIGHT STABILIZER**	**1**
17	**WEIGHT STACK FRAME**	**1**
22	**ALUMINUM PULLEY 3/8 X 1 X 3 1/2**	**2**
23	ALUMINUM PULLEY 3/8 X 1 X 4 1/2	4
30	BUTTON HEAD SOCKET CAP SCREW GR-8 Z/P 1/2-13 X 1 1/2	4
34	BUTTON HEAD SOCKET CAP SCREW GR-8 Z/P 3/8-16 X 1 3/4	6
44	FLAT WASHER SAE Z/P 1/2”	4
45	FLAT WASHER SAE Z/P 3/8”	12
74	NYLON INSERT JAM LOCK NUT GR-8 Z/P 3/8-16	6
88	SPLIT LOCK WASHER Z/P 1/2”	4

WARNING

IT IS RECOMENDED TO HAVE ANOTHER PERSON ASSIST YOU WITH THE INSTALLATION OF THIS UNIT.

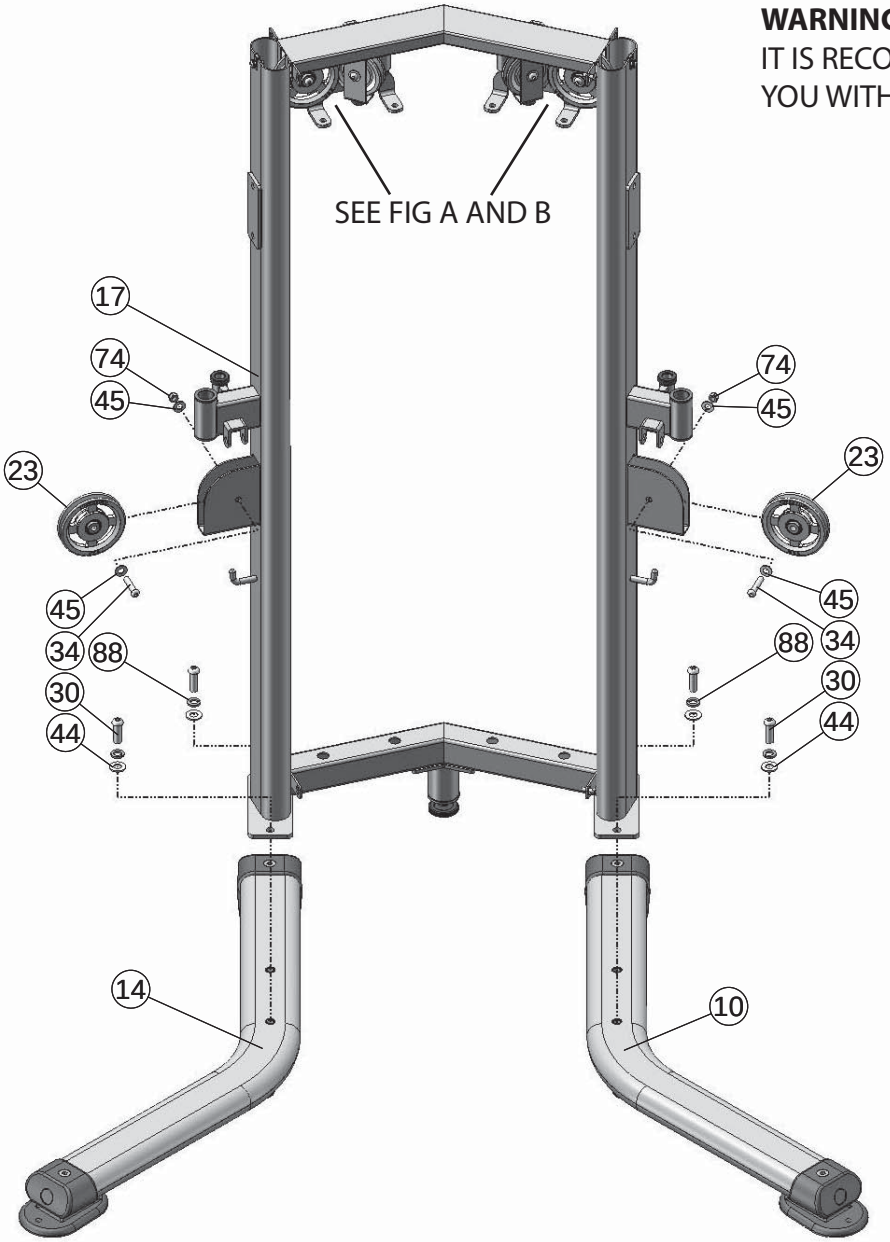

FIG A

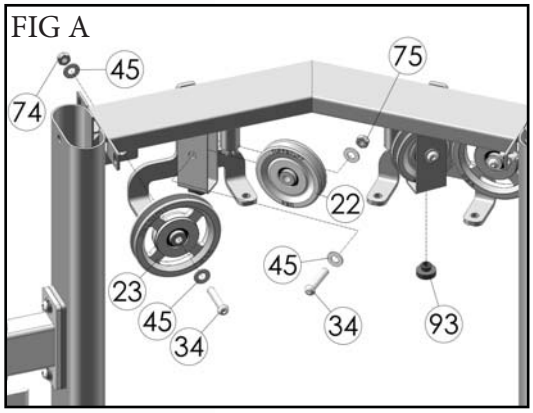

FIG B

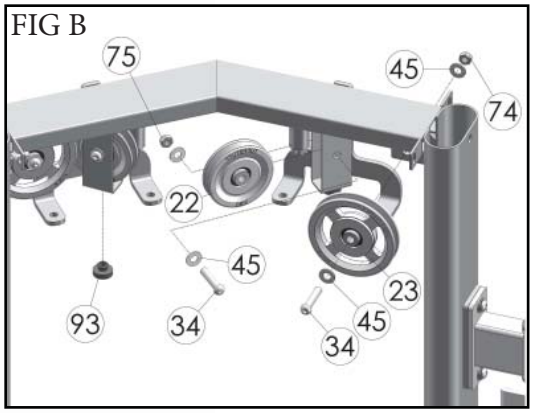

FULLY FASTEN

Step 2

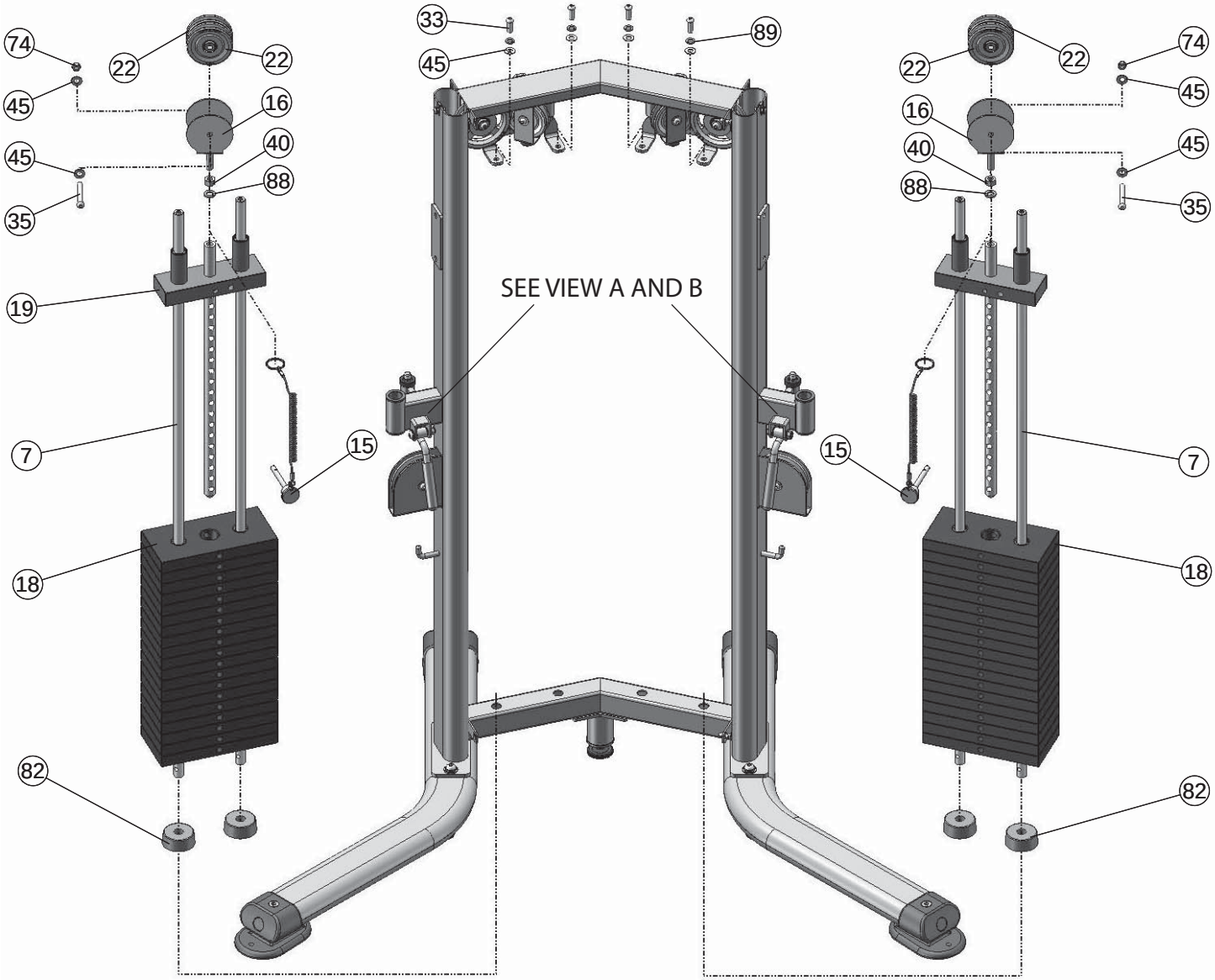

FULLY FASTEN

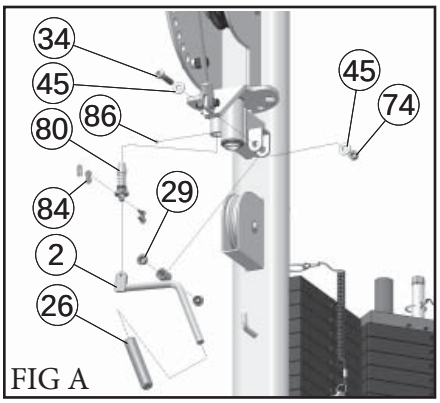

FIG A

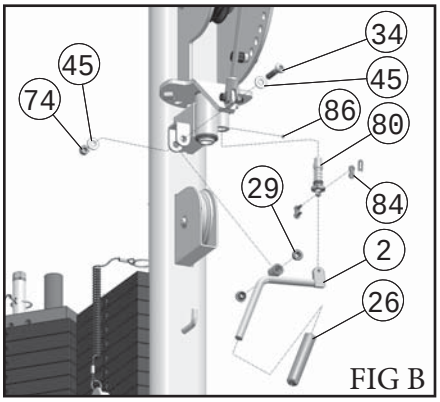

FIG B

Assembly List

Item #	Description	Qty.
2	**BOTTOM RELEASE HANDLE**	**2**
7	**GUIDE ROD 3/4 X 52 3/8**	**4**
15	**SELECTOR PIN W/COIL 3/8 X 4 GOLD KNOB**	**2**
16	**TOP PLATE DOUBLE PULLEY BRACKET**	**2**
18	10 LB STEEL WEIGHT PLATE BLACK 4 9/16 X 9 7/16	38
19	10 LB TOP PLATE W/ADJ SLTR BAR 19 BLK WTS ASSY	2
22	ALUMINUM PULLEY 3/8 X 1 X 3 1/2	4
26	BLACK RUBBER GRIP 1/2 X 4	2
29	BRONZE FLANGED BUSHING 3/8 X 1/2 X 1/2 X 11/16 X 1/16	4
33	BUTTON HEAD SOCKET CAP SCREW GR-8 Z/P 3/8-16 X 1	4
34	BUTTON HEAD SOCKET CAP SCREW GR-8 Z/P 3/8-16 X 1 3/4	4
35	BUTTON HEAD SOCKET CAP SCREW GR-8 Z/P 3/8-16 X 2 3/4	2
40	FINISHED HEX NUT B/O 1/2-13	2
45	FLAT WASHER SAE Z/P 3/8”	12
74	NYLON INSERT JAM LOCK NUT GR-8 Z/P 3/8-16	4
80	PULL PIN ASSY 3 1/2 CUSTOM CUT HRD SPRING	2
82	RUBBER DONUT 3/4 X 2 1/2	4
84	SINGLE STRAND CONNECTING LINK #40	2
86	SOCKET SET SCREW Z/P 10-32 X 1/8	2
88	SPLIT LOCK WASHER Z/P 1/2”	2
89	SPLIT LOCK WASHER Z/P 3/8”	4

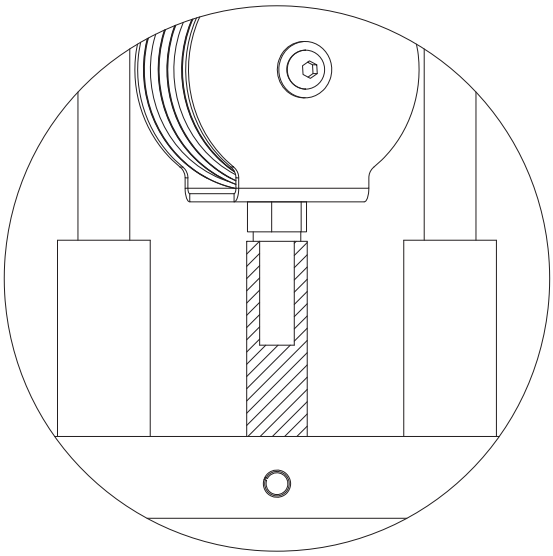

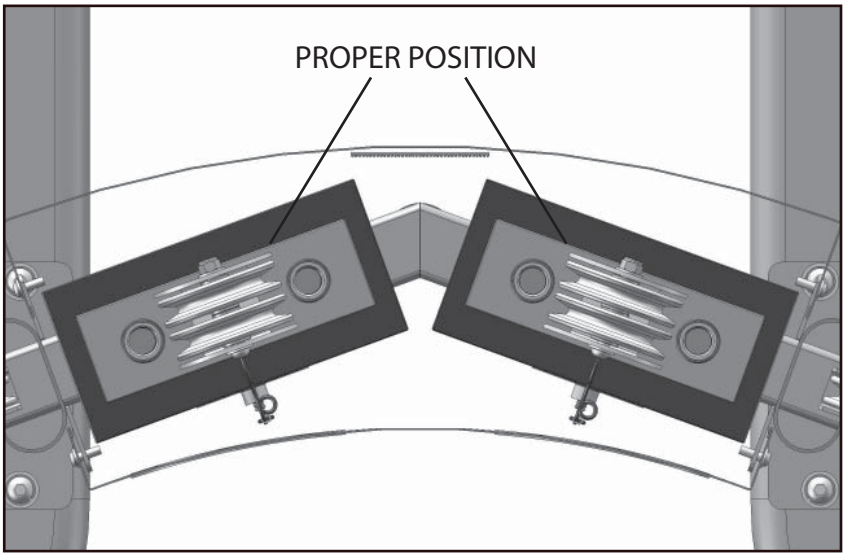

NOTE:

1. FULLY SCREW TOP PLATE DOUBLE PULLEY BRACKET (#16) FOR PROPER INSTALLATION AT POSITION SHOWN ABOVE.

Step 3

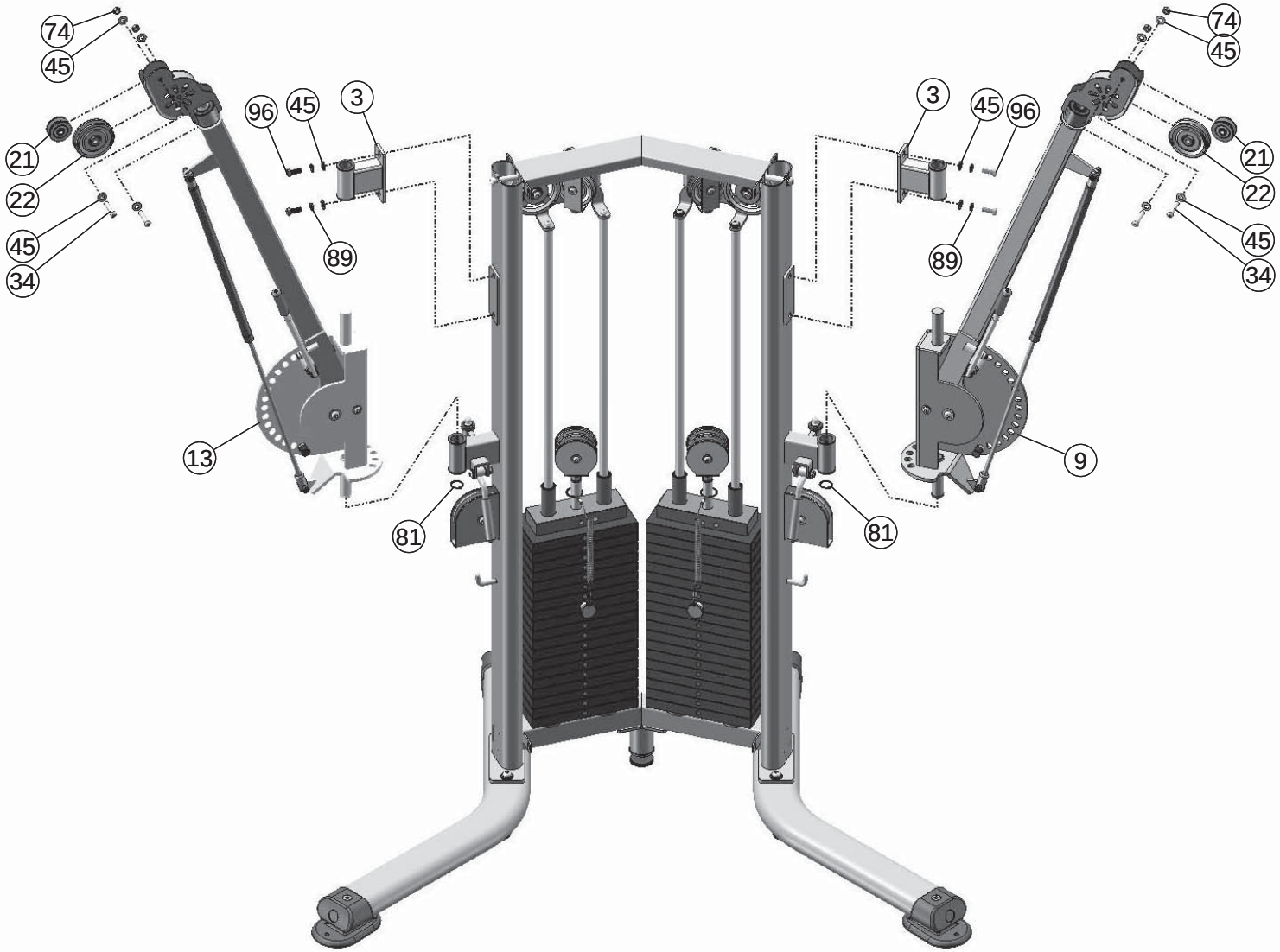

FULLY FASTEN

Assembly List		
Item #	**Description**	**Qty.**
3	**SUPPORT HOUSING**	**2**
9	**LEFT SIDE PIVOT ARM SWIVEL HOUSING**	**1**
13	**RIGHT SIDE PIVOT ARM SWIVEL HOUSING**	**1**
21	ALUMINUM PULLEY 3/8 X 1 X 2	2
22	ALUMINUM PULLEY 3/8 X 1 X 3 1/2	2
34	BUTTON HEAD SOCKET CAP SCREW GR-8 Z/P 3/8-16 X 1 3/4	4
45	FLAT WASHER SAE Z/P 3/8”	12
74	NYLON INSERT JAM LOCK NUT GR-8 Z/P 3/8-16	4
81	RETAINING SNAP RING EXT. PLAIN .925 X 1 X .042	2
89	SPLIT LOCK WASHER Z/P 3/8”	4
96	HEX HEAD CAP SCREW GR-5 Z/P 3/8-16 X 1	4

Step 4 Cable Routing

NOTE:

1. USE WIRE TO CONDUCT THE CABLE.
2. MAKE SURE THE CABLE RUNS BETWEEN THE PULLEYS.
3. SOME PARTS CUT/NOT SHOWN FOR CLARITY.

BEGINNING POINT

Assembly List

Item #	Description	Qty.
1	**MAIN CABLE 1/8”**	**2**
38	CONTOUR ERGO HANDLE LONG STRAP	2
47	HARD PVC CABLE STOPPER 1 1/2 RD X 2	2
83	SHOULDER BOLT Z/P 3/8 X 3/4	2

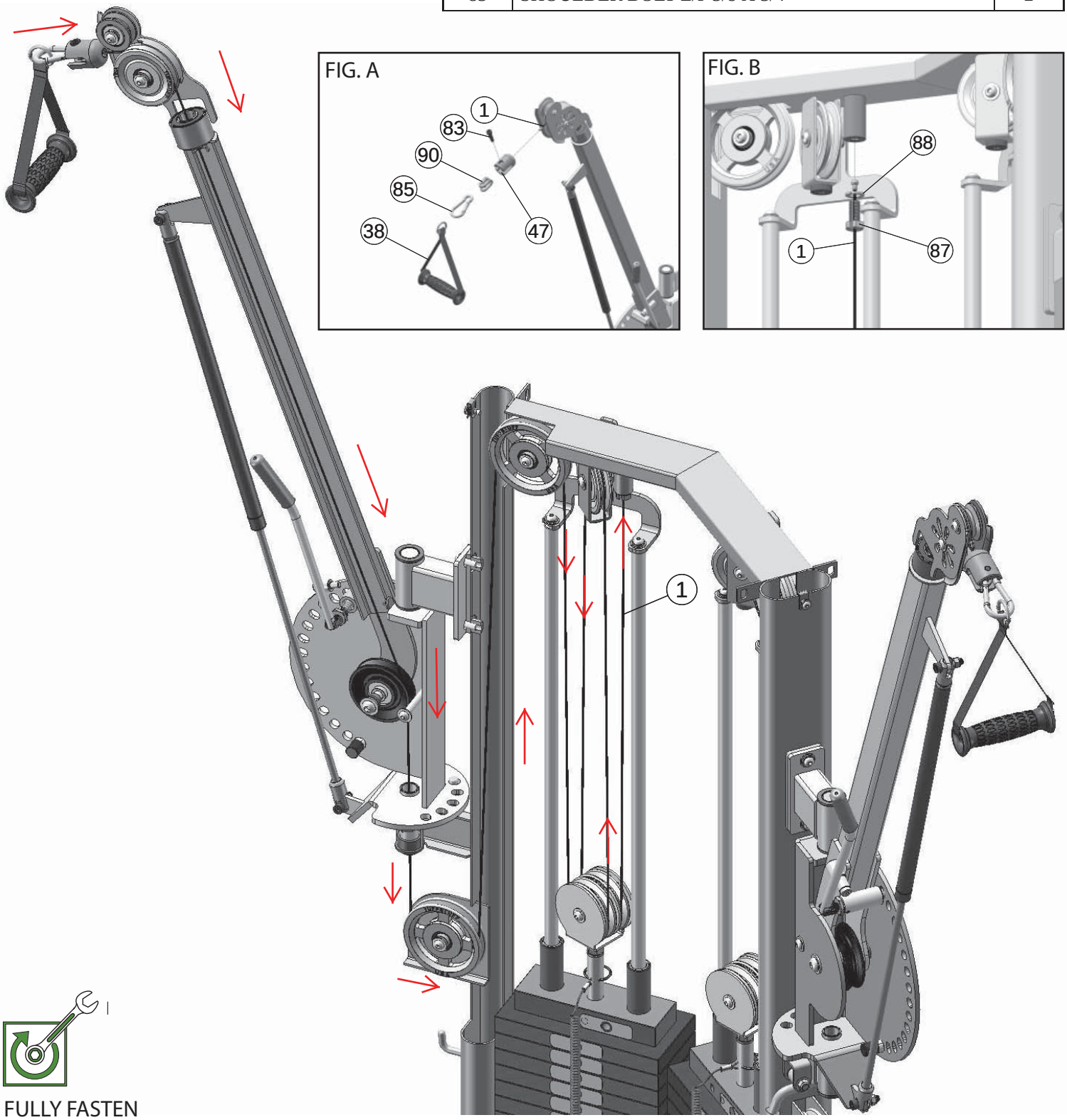

FULLY FASTEN

Step 5 Cable Routing

Continue Assembly List		
Item #	**Description**	**Qty.**
85	SNAP LINK Z/P 8MM X 80MM	2
87	SPLIT BOLT GR-8 Z/P 1/2-13 X 1 (.125 RND CUT)	2
88	SPLIT LOCK WASHER Z/P 1/2”	2
90	STRAP BRACKET 20 #SF20 STAINLESS STEEL 3/32”	2

NOTE:

1. USE WIRE TO CONDUCT THE CABLE.
2. MAKE SURE THE CABLE RUNS BETWEEN THE PULLEYS.
3. SOME PARTS CUT/NOT SHOWN FOR CLARITY.

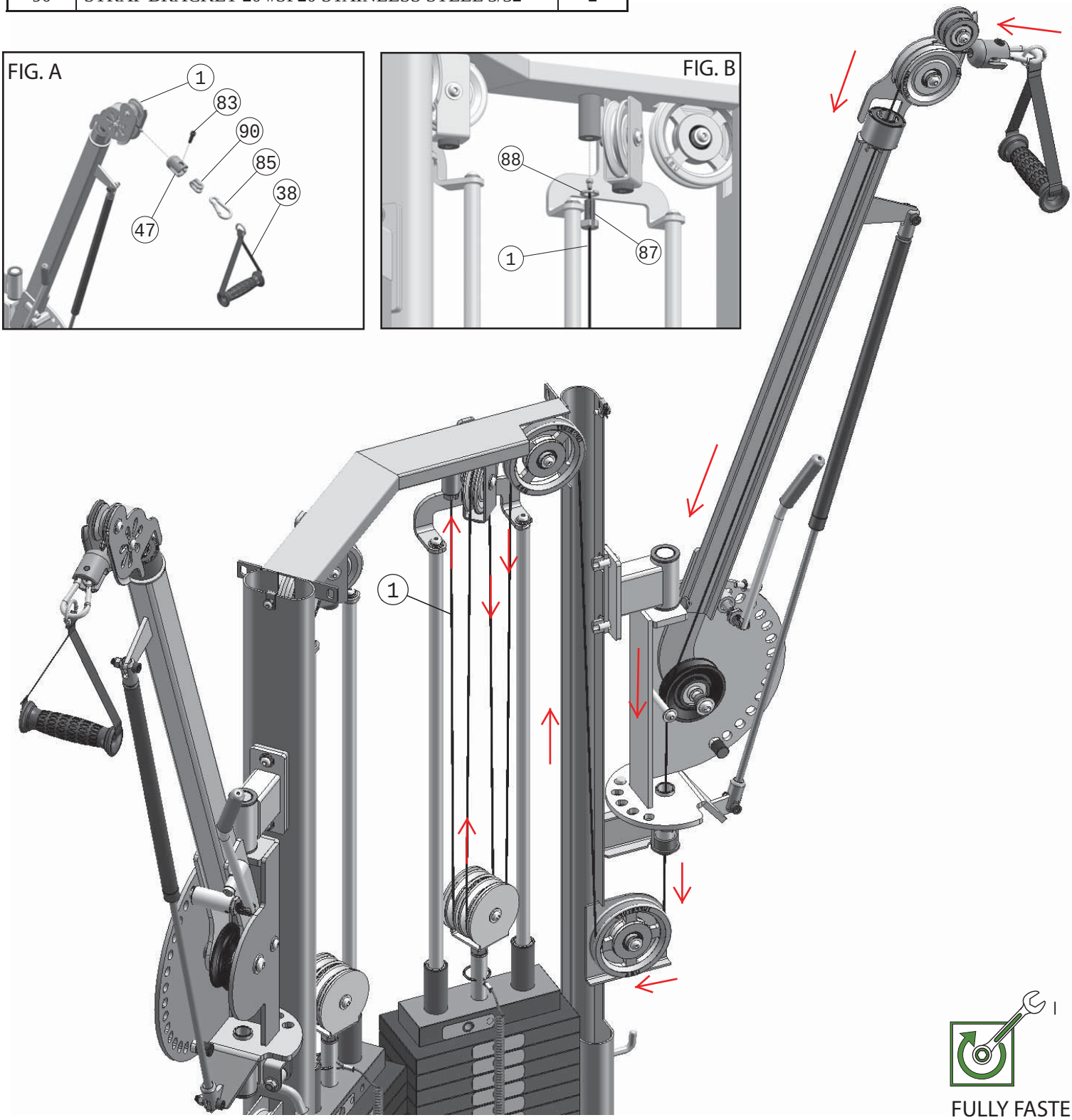

Step 6

NOTE:
1. TOP PLATE LABEL GOES ON HOLE OFF CENTER AS SHOWN. LABEL WILL COVER HOLE ON CENTER.

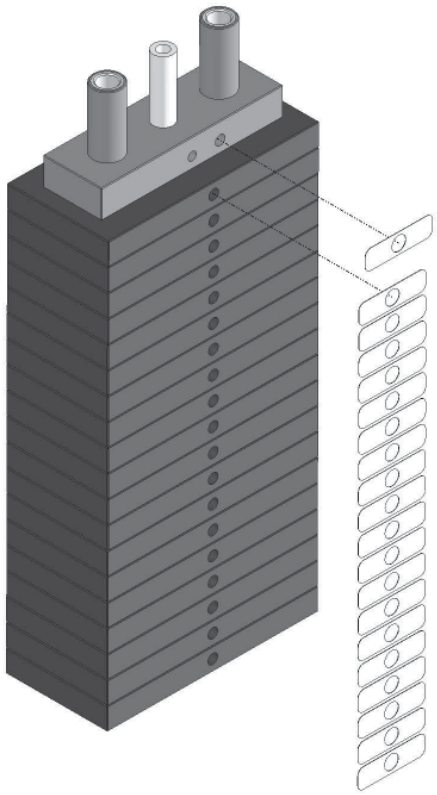

Weight stack label and lubrication instructions

1. Wipe front surface of weight stack with rubbing alcohol and wipe dry.
2. Peel off back sheet (adhesive side) from label (#58) and make sure that the label remains attached to the application tape.
3. Line up left edge of label sheet with outside edge of weight holes.
4. Line up the first label to hole on top plate.
5. Make sure label is straight and slowly press into place.
6. Gently remove application tape and rub each label firmly against the weight stack.
7. Allow labels to stand for 2 days to allow adhesive to cure fully.
8. Open the lube package provided and apply a thin film of lubricant around the first 3 inches of the guide rods above the top plate.
9. After the cables are installed, do a set of reps to spread the lubricant thoroughly.

Step 7

Assembly List		
Item #	**Description**	**Qty.**
6	**FRONT WEIGHT SHIELD**	**1**
11	**REAR WEIGHT SHIELD**	**1**
32	BUTTON HEAD SOCKET CAP SCREW GR-8 Z/P 1/4-20 X 3/4	8
43	FLAT WASHER SAE Z/P #12 (1/4”)	8

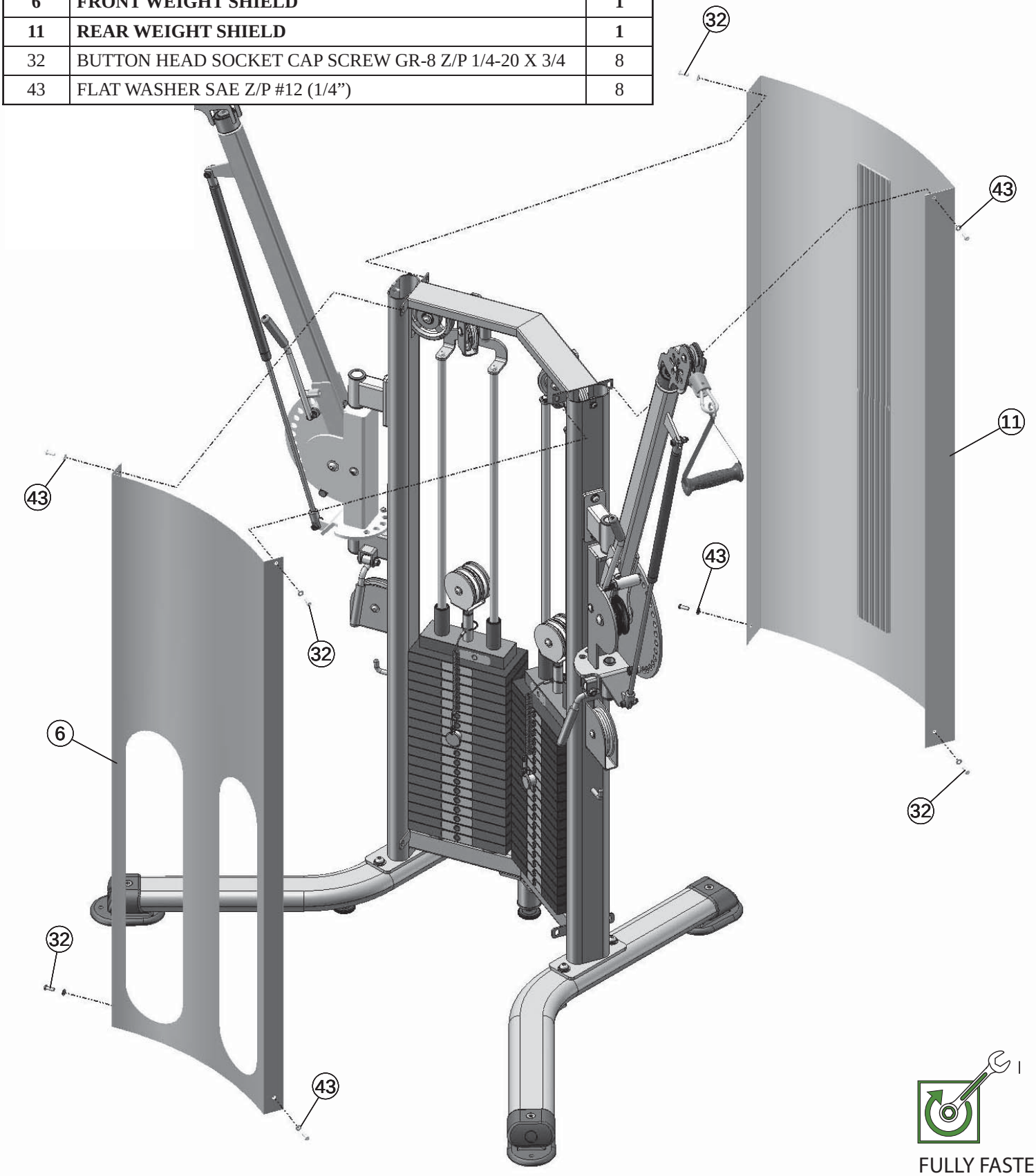

FULLY FASTEN

Step 8

Assembly List		
Item #	**Description**	**Qty.**
32	BUTTON HEAD SOCKET CAP SCREW GR-8 Z/P 1/4-20 X 3/4	2
43	FLAT WASHER SAE Z/P #12 (1/4”)	2
77	PLASTIC CAP	1

NOTE:
1. MAKE SURE PLASTIC CAP SITS LEVELED.

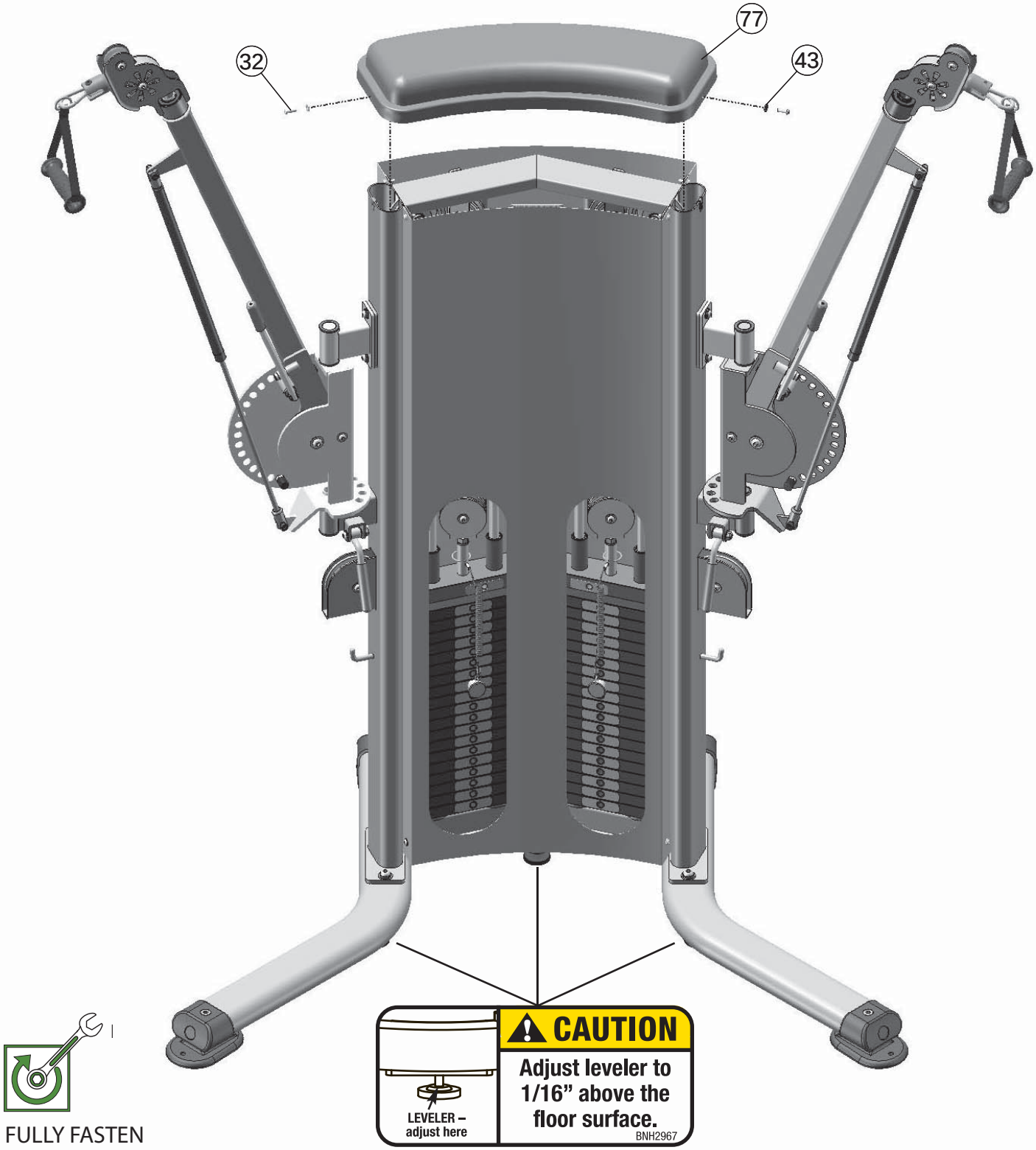

Notes

COLOR CHART
GRAY= SUB-ASSEMBLY PARTS
BLACK= HARDWARE

REV1

MFT-2700
Parts List

Item No.	Description	Rev.	Part No.	Qty.	Item No.	Description	Part No.	Qty.
1	CABLE	0	UP6792	2	51	LABEL MFT-2700 EXERCISE CHART	BNH2968	1
2	BOTTOM RELEASE HANDLE	0	UP6774	2	52	LABEL MFT-2700 LEFT CAM	BNH2962	1
3	SUPPORT HOUSING	0	UP6780	2	53	LABEL MFT-2700 LEVELER ADJUSTMENT	BNH2967	3
4	CHROME LEVER HANDLE	0	UP6791	2	54	LABEL MFT-2700 RIGHT CAM	BNH2961	1
5	END PULLEY BRACKET WLM	1	UP6455	2	55	LABEL MFT-2700 SCHEDULE REPLACEMENT PARTS...	BNH2965	1
6	FRONT WEIGHT SHIELD	0	UP6785	1	56	LABEL MFT-2700 SERIAL #	BNH2964	2
7	GUIDE ROD 3/4 X 52 3/8	0	UP6784	4	57	LABEL MFT-2700 WARRANTY	BNH2963	1
8	LEFT SIDE PIVOT ARM	0	UP6779	1	58	LABEL NUMBERS 10-200 LBS/KGS 7/8 X 3 YELLOW & BLACK	BNH4069	2
9	LEFT SIDE PIVOT ARM SWIVEL HOUSING	0	UP6777	1	59	LABEL TUFFSTUFF FITNESS (LG VERTICAL)	BNH2933	1
10	LEFT STABILIZER	0	UP6783	1	60	LABEL WARNING_SERIOUS INJURY OR DEATH	BNH2939	1
11	REAR WEIGHT SHIELD	0	UP6786	1	61	HEX KEY 5/32"	BNH2545	1
12	RIGHT SIDE PIVOT ARM	0	UP6781	1	62	LABEL-CAUTION CHECK PULL-PIN IS FULLY...	BNH2912	4
13	RIGHT SIDE PIVOT ARM SWIVEL HOUSING	0	UP6778	1	63	LABEL-DANGER CHECK RETAINING NUT... 1.5X1.688	BNH2902	4
14	RIGHT STABILIZER	0	UP6782	1	64	LABEL-DANGER USE THIS EQUIPMENT...	BNH2903	1
15	SELECTOR PIN W/COIL 3/8 X 4 GOLD KNOB	0	UP3035	2	65	LABEL-IMPORTANT FOR SMOOTH PERFORMANCE...	BNH2925	2
16	TOP PLATE DOUBLE PULLEY BRACKET	0	UP6775	2	66	LABEL-INSPECTIONS RECOMMENDED INSPECTION…	BNH2922	1
17	WEIGHT STACK FRAME	0	UP6776	1	67	LABEL-WARNING ANCHOR BOLT…	BNH2990	4
18	10 LB STEEL WEIGHT PLATE BLACK 4 9/16 X 9 7/16 ASSY		BNH1650	38	68	LABEL-WARNING ATTENTION USERS!...	BNH2910	2
19	10 LB TOP PLATE W/ADJ SLTR BAR 19 BLK WTS ASSY		BNH1982	2	69	LABEL-WARNING ATTENTION USERS!...	BNH2911	2
20	ALUMINUM PULLEY 1/2 X 1 X 3 1/2		BNH3051	2	70	LABEL-WARNING KEEP BODY, HANDS...	BNH2909	2
21	ALUMINUM PULLEY 3/8 X 1 X 2		BNH2452	2	71	LABEL-WARNING KEEP BODY, HANDS...	BNH2926	2
22	ALUMINUM PULLEY 3/8 X 1 X 3 1/2		BNH1266	8	72	LEVELER	BNH3052	3
23	ALUMINUM PULLEY 3/8 X 1 X 4 1/2		BNH0069	4	73	NYLON INSERT JAM LOCK NUT GR-8 Z/P 1/2-13	BNH2997	2
24	BALL BEARING 25 X 47 X 12MM		BNH2725	4	74	NYLON INSERT JAM LOCK NUT GR-8 Z/P 3/8-16	BNH2998	18
25	BLACK ACETAL STOPPER CAP (MFT-2700)		BNH3056	2	75	NYLON INSERT LOCK NUT Z/P 5/16-18	BNH2056	4
26	YELLOW GRIP 1/2 X 4		BNH3059	4	76	NYLON STEM BUTTON .720" X .187"	BNH0533	2
27	BRONZE BUSHING 1 X 1 1/4 X 3/4 X 1 1/2 X 1/8		BNH0527	8	77	PLASTIC CAP	BNH2875	1
28	BRONZE BUSHING 1/2 X 5/8 X 1/2 X 7/8 X 1/8		BNH0528	4	78	PLASTIC INSERT STOPPER 1" RD	BNH3054	2
29	BRONZE FLANGED BUSHING 3/8 X 1/2 X 1/2 X 11/16 X 1/16		BNH0738	4	79	PLASTIC WASHER 25 X 35 X 3MM	BNH2726	2
30	BUTTON HEAD SOCKET CAP SCREW GR-8 Z/P 1/2-13 X 1 1/2		BNH2993	4	80	PULL PIN ASSY 3 1/2 CUSTOM CUT HRD SPRING	BNH1723	4
31	BUTTON HEAD SOCKET CAP SCREW GR-8 Z/P 1/2-13 X 3 3/4		BNH2994	2	81	RETAINING SNAP RING EXT. PLAIN .925 X 1 X .042	BNH0419	4
32	BUTTON HEAD SOCKET CAP SCREW GR-8 Z/P 1/4-20 X 3/4		BNH2995	10	82	RUBBER DONUT 3/4 X 2 1/2	BNH0068	4
33	BUTTON HEAD SOCKET CAP SCREW GR-8 Z/P 3/8-16 X 1		BNH2033	4	83	SHOULDER BOLT Z/P 3/8 X 3/4	BNH2392	8
34	BUTTON HEAD SOCKET CAP SCREW GR-8 Z/P 3/8-16 X 1 3/4		BNH2426	12	84	SINGLE STRAND CONNECTING LINK #40	BNH0066	4
35	BUTTON HEAD SOCKET CAP SCREW GR-8 Z/P 3/8-16 X 2 3/4		BNH2996	2	85	SNAP LINK Z/P 8MM X 80MM	BNH0065	2
36	BUTTON HEAD SOCKET CAP SCREW GR-8 Z/P 3/8-16 X 3 3/4		BNH2435	2	86	SOCKET SET SCREW Z/P 10-32 X 1/8	BNH2088	4
37	CLEVIS BRACKET 3/16" THREAD 8 MM		BNH1719	4	87	SPLIT BOLT GR-8 Z/P 1/2-13 X 1 (.125 RND CUT)	BNH2991	2
38	CONTOUR ERGO HANDLE LONG STRAP		BNH2738	2	88	SPLIT LOCK WASHER Z/P 1/2"	BNH0572	8
39	FACILITY SIGN BE ALERT! THE FITNESS EQUIPMENT...		BNH3002	1	89	SPLIT LOCK WASHER Z/P 3/8"	BNH2032	8
40	FINISHED HEX NUT B/O 1/2-13		BNH0201	2	90	STRAP BRACKET 20 #SF20 STAINLESS STEEL 3/32"	BNH1904	2
41	FLANGE HEX NUT 3/8-16		BNH2999	1	91	SUPER LUBE TEFLON LUBRICANT 82340	BNH0704	2
42	FLAT HEAD SOCKET CAP SCREW Z/P 1/2-13 X 3		BNH3053	4	92	SWIVEL HOUSING STOPPER	BNH3055	2
43	FLAT WASHER SAE Z/P #12 (1/4")		BNH2982	10	93	URETHANE BUMPER 962	BNH0244	2
44	FLAT WASHER SAE Z/P 1/2"		BNH2031	8	94	U-STYLE TAPPED HOLE NUT 1/4-20	BNH0708	2
45	FLAT WASHER SAE Z/P 3/8"		BNH2030	42	95	RUBBER CORR MAT 1/8 X 3 15/16 X 24 7/32	BNH3057	2
46	GAS SHOCK NO. C16-18868 25 33.94 EXT, 16.14 STROKE		BNH1705	2	96	HEX HEAD CAP SCREW GR-5 Z/P 3/8-16 X 1	BNH2037	4
47	HARD PVC CABLE STOPPER 1 1/2 RD X 2		BNH2258	2	97	HEX KEY 1/8"	BNH2541	1
48	HORIZONTAL FOOT END CAP		BNH2555	4	98	HEX KEY 3/16"	BNH2542	1
49	LABEL DANGER DO NOT LEAN AGAINST OR PULL...		BNH2955	1	99	HEX KEY 3/32"	BNH2543	1
50	LABEL MFT WEIGHT CONVERTION CHART		BNH2936	1				

Basic Exercise Guide

Use this equipment only for the exercises as shown. Know your limitations. If you are new to weight training, always start with lighter weight, learn how to perform the exercise correctly and train at a controlled rate of speed. Warm up properly with stretchings, calisthenics or cardiovascular exercises. Never hold your breath – general rule of thumb is to exhale when you exert.

⚠ WARNING Before working out, read and understand the Owner's Manual, all danger, warning and caution labels listed on pages 3-5. This equipment is for HOME use only. Obtain a medical examination before beginning any exercise program. If you feel faint, dizzy or pain, stop exercising immediately.

BENT OVER ROWS

Start/End

Mid-Range

TRICEP KICK BACK

Start/End

Mid-Range

CALF RAISE

Start/End

Mid-Range

INNER THIGH

Start/End

Mid-Range

SHRUGS

Start/End

Mid-Range

SQUATS

Start/End

Mid-Range

OUTER THIGH

Start/End

Mid-Range

GLUTE KICK

Start/End

Mid-Range

Basic Exercise Guide

Use this equipment only for the exercises as shown. Know your limitations. If you are new to weight training, always start with lighter weight, learn how to perform the exercise correctly and train at a controlled rate of speed. Warm up properly with stretchings, calisthenics or cardiovascular exercises. Never hold your breath – general rule of thumb is to exhale when you exert.

Before working out, read and understand the Owner's Manual, all danger, warning and caution labels listed on pages 3-5. This equipment is for HOME use only. Obtain a medical examination before beginning any exercise program. If you feel faint, dizzy or pain, stop exercising immediately.

KNEELING LAT PULLDOWN

Start/End

Mid-Range

KNEELING AB CRUNCH

Start/End

Mid-Range

PECTORAL CROSSOVER

Start/End

Mid-Range

WOOD CHOPS

Start/End

Mid-Range

TRICEP PRESSDOWN

Start/End

Mid-Range

TRICEP EXTENSION

Start/End

Mid-Range

CHEST FLYS

Start/End

Mid-Range

REAR DELT FLYS

Start/End

Mid-Range

Basic Exercise Guide

Use this equipment only for the exercises as shown. Know your limitations. If you are new to weight training, always start with lighter weight, learn how to perform the exercise correctly and train at a controlled rate of speed. Warm up properly with stretchings, calisthenics or cardiovascular exercises. Never hold your breath – general rule of thumb is to exhale when you exert.

Before working out, read and understand the Owner's Manual, all danger, warning and caution labels listed on pages 3-5. This equipment is for HOME use only. Obtain a medical examination before beginning any exercise program. If you feel faint, dizzy or pain, stop exercising immediately.

CORE ROTATION

Start/End

Mid-Range

CHEST PRESS

Start/End

Mid-Range

OFFER UPS

Start/End

Mid-Range

REVERSE WOOD CHOPS

Start/End

Mid-Range

SHOULDER PRESS

Start/End

Mid-Range

LATERAL RAISE

Start/End

Mid-Range

STANDING CURLS

Start/End

Mid-Range

UPRIGHT ROWS

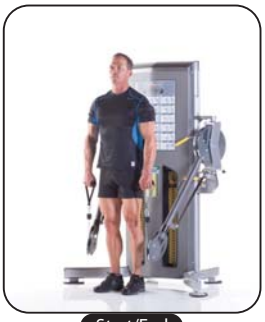
Start/End

Mid-Range

LIGHT COMMERCIAL WARRANTY

This warranty applies only in the United States to the products manufactured or distributed by TuffStuff Fitness Equipment Inc. under the TUFFSTUFF brand name. TuffStuff warrants to the original purchaser that TuffStuff equipment will be free from defects in material and workmanship. All warranty periods begin to run from the date of purchase to the original purchaser. The warranty and remedies set forth herein are conditioned upon proper storage, installation, use and maintenance and conformance with any recommendations of TuffStuff. This warranty does not cover products not manufactured by TuffStuff or products which are altered without the express written consent of TuffStuff.

Light Commercial Warranty:

Ten (10) Years: **Structural Main Frames, Welds, Cams and Weight Plates.**

Five (5) Years: **Pivot Bearings, Pulleys, Bushings, Guide Rods and Gas Shocks.**

One (1) Year: **Linear Bearings and Pull-Pin Components**
All other parts not mentioned elsewhere in the warranty will expire from the date of delivery to the original purchaser.

Six (6) Months: **Upholstery, Cables, Finish and Rubber Grips.**

Light Commercial Use:
Light Commercial warranty applies only to facilities like hotels, apartment complexes, personal training studios, fire & police stations, etc. where the equipment would be used no more than 30 people per day.

Home Lifetime Warranty:

Lifetime of the equipment while owned by the original purchaser (applies to defects from manufacturer only).

This warranty DOES NOT cover:

1. TuffStuff equipment sold for and used in a commercial or institutional environment.
2. Any damage, failure or loss caused by accident, misuse, neglect, abuse, improper assembly & maintenance, or failure to follow instructions or understand all danger, warning and caution labels affixed on the machine and in the owner's manual
3. Use of the equipment in a manner for which it was not designed.
4. Original equipment that is altered, or the use of replacement parts and components of another manufacturer other than TuffStuff.

The obligation of TuffStuff under this warranty is limited to repairing or replacing warranted defective parts as TuffStuff may elect, at TuffStuff's facility in Chino, California without charge to the purchaser. Purchaser is responsible for installation of repaired or replaced parts, and all transportation and insurance costs on returned or replaced equipment to and from TuffStuff's facility in Chino.

THE FOREGOING SHALL CONSTITUTE THE SOLE REMEDY OF THE PURCHASER AND THE SOLE LIABILITY OF TUFFSTUFF WITH REGARD TO WARRANTY. NO IMPLIED STATUTORY WARRANTY OR IMPLIED STATUTORY WARRANTY OF MERCHANTABILITY OR FITNESS FOR A PARTICULAR PURPOSE SHALL APPLY. IN NO EVENT, WHETHER AS A RESULT OF BREACH OF CONTRACT, WARRANTY, NEGLIGENCE OR OTHERWISE, SHALL TUFFSTUFF BE LIABLE FOR SPECIAL, INCIDENTAL OR CONSEQUENTIAL DAMAGES INCLUDING, BUT NOT LIMITED TO, LOSS OF PROFITS OR REVENUE, LOSS OF USE OF EQUIPMENT, COST OF CAPITAL, COST OF SUBSTITUTION EQUIPMENT, DOWNTIME COST, OR CLAIMS OF CUSTOMERS OR PURCHASER FROM SUCH DAMAGE.

This written warranty is the final, complete and exclusive agreement of the parties with respect to the quality or performance of the equipment and no action for breach of this written warranty or any implied warranty shall be commenced more than one (1) year after the accrual of the cause of action. No modification of this warranty or waiver of its terms shall be binding on either party unless approved in writing by an authorized representative of the party. Contact TuffStuff Fitness Equipment Inc. at 13971 Norton Avenue, Chino, CA 91710, before returning any defective equipment.

This warranty gives you specific legal rights and you may also have other rights, which may vary from state to state.

SERIAL # _____

Write your Serial number here for future reference

_____
Purchase Date

TuffStuff Fitness Equipment Inc.
13971 Norton Avenue, Chino, CA 91710, USA Phone: 909-629-1600 Fax: 909-629-4967
www.tuffstuffitness.com service@tuffstuff.net or service1@tuffstuff.net
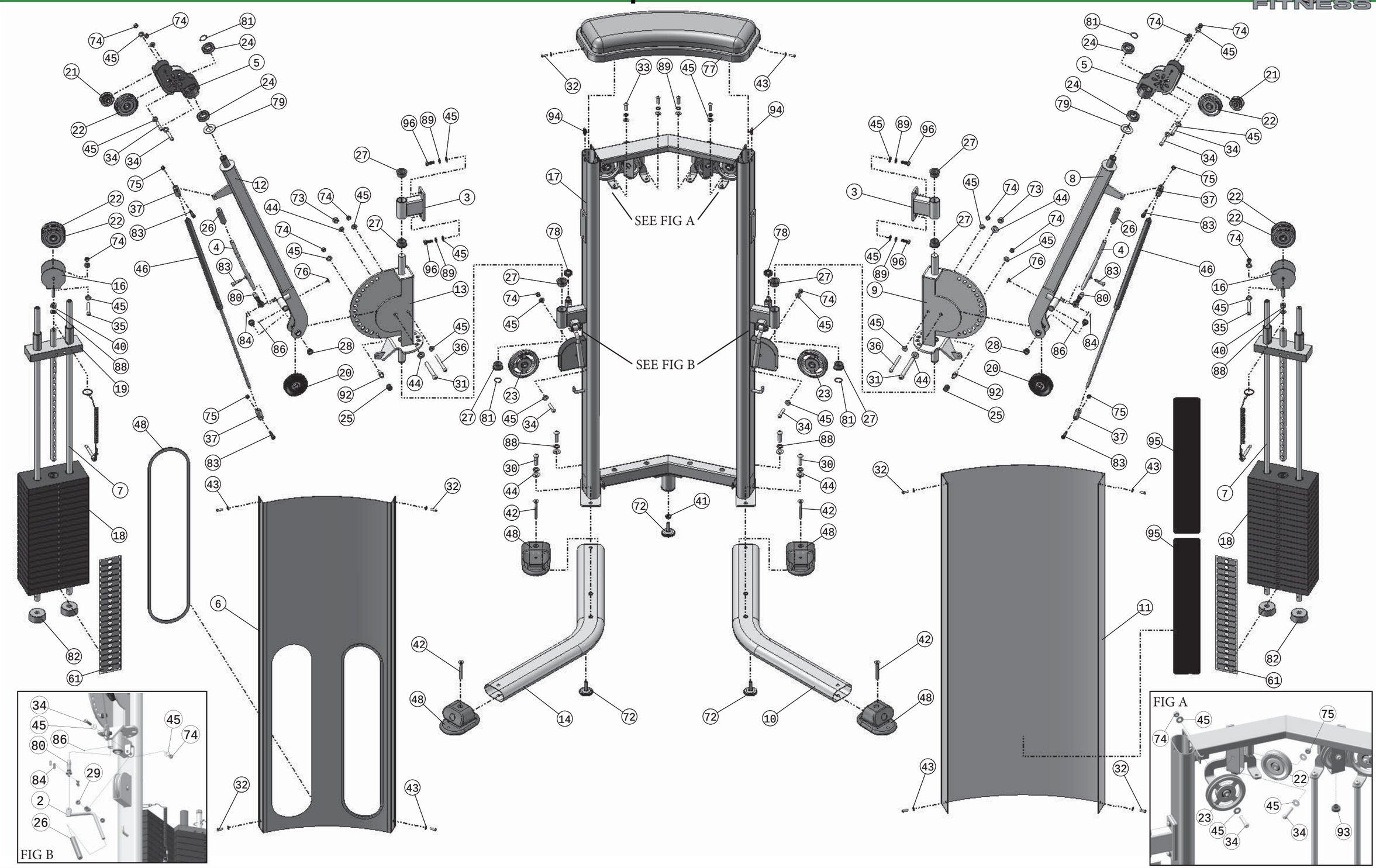
Exploded View