TUFFSTUFF FITNESS INTERNATIONAL

OWNER'S MANUAL

Maintenance & Assembly Instructions

IMPORTANT: KEEP THIS MANUAL FOR FUTURE REFERENCE

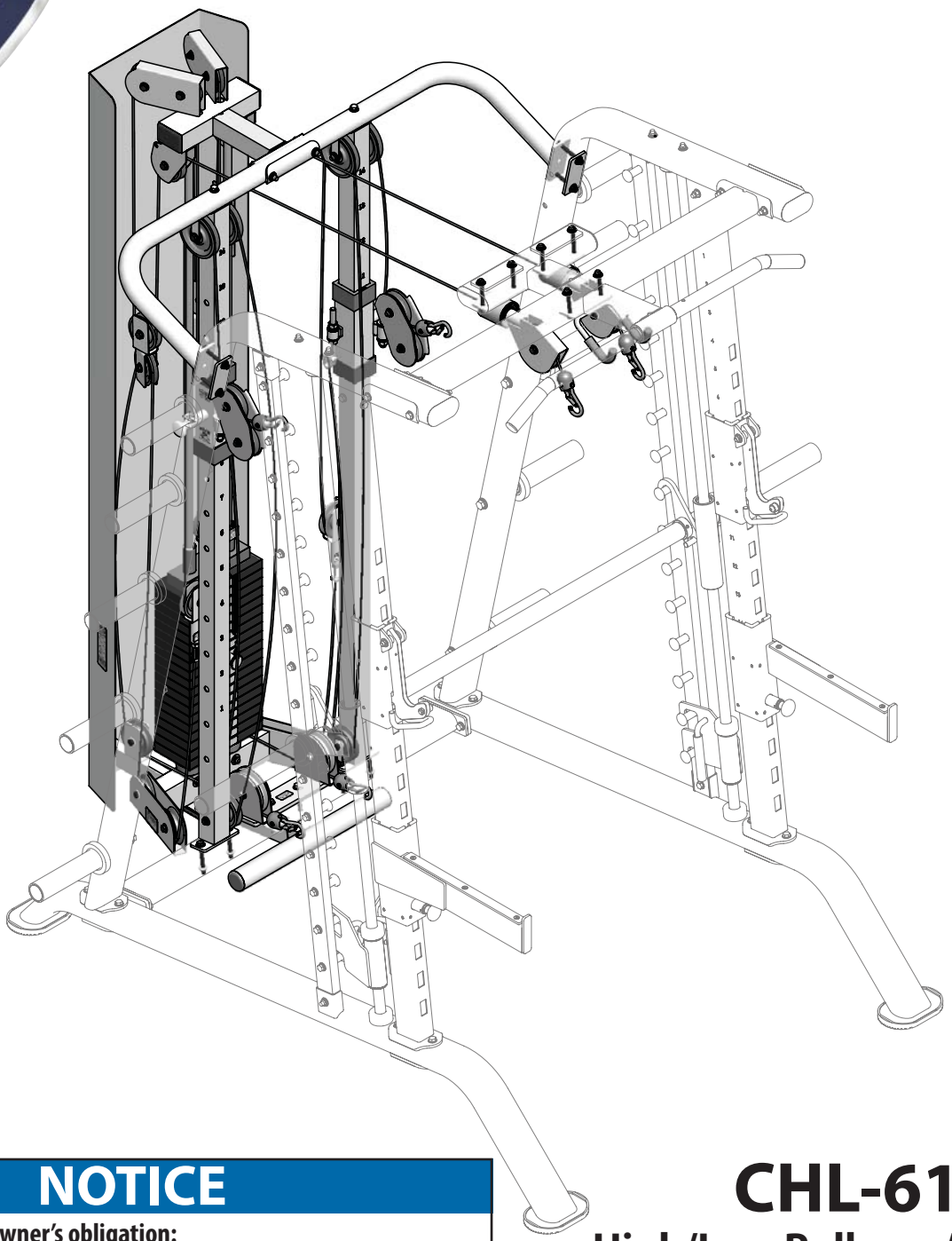

CHL-610WS

High/Low Pulley w/200 Lbs Weight Stack for CSM-600

NOTICE

It is the Purchaser's/Owner's obligation:

1. To disclose and post all Rules & Regulations, Danger, Warning and Caution labels affixed on the machine to their customers/users.
2. Equipment to be installed by TFI Authorized Dealer or a service company approved by TFI.
3. Provide trained personnel, supervision and correct usage of the equipment.
4. Provide scheduled inspection, maintenance & repairs and must be performed by TFI Authorized Dealer or a service company approved by TFI.
5. Must use only genuine TuffStuff replacement parts.

CHL-610WS_Rev0
Revision Date 03-26-2014

Table of Contents

Overhead Specifications ..... Page 3
DANGER, WARNING, & CAUTION Labels Information ..... Page 4-6
Important Safety Instructions ..... Page 7
Registration, Service & Assembly ..... Page 8
Inspection/Maintenance ..... Page 9
Cable Inspection ..... Page 10
Assembly Steps ..... Page 11-30
Parts List ..... Page 31-32
Pre-Assembled Components ..... Page 33-35
WARRANTY ..... Page 36

TuffStuff Fitness International, Inc. continually engages in research related to product improvements. Please take the time to carefully read through this owner's manual thoroughly. Instructions contained in this owner's manual are not intended to cover all details or variations possible with equipment, or to cover every contingency that may be met in conjunction with assembly, installation, operation, maintenance or troubleshooting of the equipment. Even though we have prepared this owner's manual with extreme care, neither the manufacturer nor the author can accept responsibility for any errors in, or omission from, the information given. Should additional information be required, or should situations arise that are not covered by this owner's manual, the matter should be directed to Customer Service at TuffStuff Fitness International, Inc. in Chino, California.

Overhead Specifications

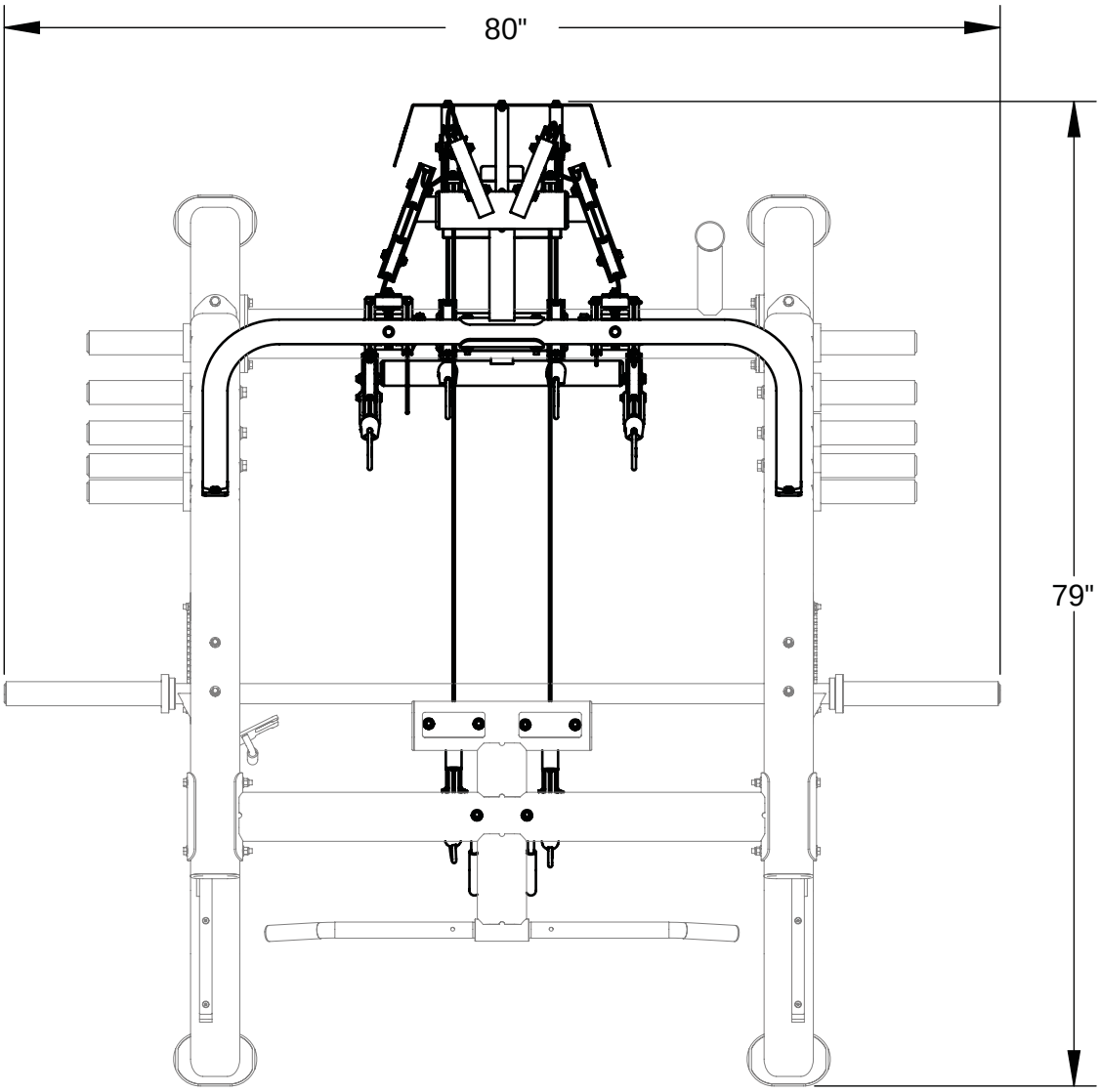

CHL-610WS Attached to CSM-600

L 79" X W 80" X H 84"

CHL-610WS WEIGHT: 435 lbs.

MAX-LOAD WEIGHT LIMIT 200 lbs.

Carefully read ALL Danger, Warning & Caution labels posted on the machine

89

INSPECTIONS

Recommended Inspection Replace all parts at first signs of wear or damage.	DAILY	WEEKLY	MONTHLY	6-MONTH	YEARLY
INSPECT: Links, pull-pins, snap locks, swivels, connectors, selector pin, and welded-joints.	X				
CLEAN: Upholstery with lanolin-base cleaner. Do not use Windex.	X				
INSPECT: Cables, Belts and tension (adjust if needed).	X				
INSPECT: All labels		X			
INSPECT: All nuts and bolts (tighten if needed).		X			
INSPECT: Accessory bars, handles, rubber grips.		X			
INSPECT: All anti-skid surfaces.		X			
CLEAN & LUBRICATE: Clean guide rods with Super Lube® spray lubricant and lubricate with Super Lube® (PTFE) grease.			X		
LUBRICATE: Seat sleeves, pul-pin sliding mechanism, bushings and linear bearings.			X		
CLEAN & WAX: All powder-coat finishes.				X	
REPLACE: Cables & connecting parts.					X

Use only genuine TuffStuff replacement parts. Failure to do so will void warranty and could result in serious injury or death.

TuffStuff Fitness International
Chino, CA 91710, USA
www.tuffstuffitness.com BNH3137

86

⚠ WARNING

Serious injury or death can occur if these rules and pre-cautions are not observed:

1. **Read and Understand** Owner's Manual and all DANGER, WARNING and CAUTION labels before using this equipment. If you still need help, seek assistance from floor personnel.
2. Obtain a **medical exam** before beginning any exercise program.
3. **Stop exercising** if you feel faint or dizzy. Consult a physician if you are experiencing pain.
4. **Inspect equipment** prior to use for wear and tear, loose fittings, worn or frayed cables/belts and frame welds. Do not use if it appears damaged or inoperable.
5. **Do not attempt to fix** or free any jammed parts by yourself. Seek assistance from floor personnel.
6. **Use this equipment only for the intended use** and for exercise(s) shown in the exercise label.
7. Keep body, clothing and hair **clear from all moving parts.**
8. **Children must not be allowed** near this machine. Teenager must be supervised.
9. **Make sure the selector pin** is completely inserted. Use only the selector pin provided by the manufacturer. If difficulty inserting the pin, seek assistance from floor personnel.
10. **Never pin the weights in an elevated position.** Do not use the machine if found in this condition. Inform floor personnel immediately.
11. **Do not modify selectorized weight stack** with any add-on incremental weights or dumbbells, except those with standard factory installed.
12. **Do not remove labels** affixed to the machine. Replace if damaged.

TuffStuff Fitness International
Chino, CA 91710, USA
BNH3134

88

WARRANTY

LIGHT COMMERCIAL

TEN (10) YEARS:
- Frames, welds, cams and weight plates

FIVE (5) YEARS:
- Pivot bearings, pulleys, bushings, gas shocks and guide rods

ONE (1) YEAR:
- Belts, linear bearings and pull-pin components

ALL OTHER PARTS not mentioned, one year from the date of delivery to the original purchaser.

SIX (6) MONTHS:
- Upholstery, cables, finish and rubber grips

Light Commercial Use:
Light Commercial warranty applies only to facilities like hotels, apartment complexes, personal training studios, fire & police stations, etc. where the equipment would be used by no more than 30 people per day.
Refer to the Owner's Manual for details, assembly & maintenance requirements, review and understand all danger, warning and caution labels.

All warranty periods begin to run from the date of delivery to the original purchaser. The obligation of TuffStuff under this warranty is limited to repairing or replacing warranted defective parts, as TuffStuff may elect, at TuffStuff's facility in Chino, California, without charge to the Purchaser for either parts or labor. Purchaser is responsible for installation of repaired or replaced parts, and all transportation and insurance costs to and from TuffStuff's facility in Chino. For a detailed copy of the warranty, please contact:

TuffStuff Fitness International
Chino, CA 91710, USA
www.tuffstuffitness.com
BNH3136

87

SCHEDULE
Replacement Parts

Recommended TuffStuff Parts (replace or as needed)	3-MONTH	9-MONTH	15-MONTH	18-MONTH
Upholstery	X			
Foam Rolls	X			
Cables		X		
Rubber Grips		X		
Nylon Handles			X	
Pull-Pins			X	
Plastic Guides			X	
Weight Selector Pin			X	
Abdominal Strap			X	
Adj. Release Handle				X
Black Caster Wheels				X
Buckle Seat/Belt				X
Labels (as needed)				

Use only TuffStuff replacement parts when servicing. Failure to do so will void warranty on product and could result in personal injury.

TuffStuff Fitness International
13971 Norton Avenue
Chino, CA 91710
BNH3135

81

IMPORTANT

For smooth performance, lubricate all gliding surfaces with silicone spray lubricant.
BNH2916

79

⚠ WARNING

Keep body, hands and fingers clear of all moving parts
BNH2909

78

⚠ DANGER

Use this equipment ONLY for its intended purpose.
If you are unfamiliar with the equipment or procedure, refer to your Owner's Manual or call TuffStuff at 889-884-8275.
Failure to comply could result in serious injury or death.
BNH2903

81

IMPORTANT

For smooth performance, lubricate all gliding surfaces with silicone spray lubricant.
BNH2916

91

⚠ DANGER

TIGHTEN this retaining nut before use.
BNH3146

91

⚠ DANGER

TIGHTEN this retaining nut before use.
BNH3146

80

⚠ CAUTION

CHECK
Pull-pin is fully engaged in the hole before use.
BNH2912

83

IMPORTANT

ADJUST
Cable Tension Here
BNH2924

80

⚠ CAUTION

CHECK
Pull-pin is fully engaged in the hole before use.
BNH2912

82

⚠ WARNING

DO NOT Use for Chinning
(Lat bar holder only)
BNH2923

84

IMPORTANT

For smooth performance, clean guide rods with Super Lube® spray lubricant and lubricate with Super Lube® (PTFE) grease.
BNH2925

93

TOP PLATE 10 lbs.	TOP PLATE 4.5 kgs.
20 lbs.	9.0 kgs.
30 lbs.	13.6 kgs.
40 lbs.	18.1 kgs.
50 lbs.	22.7 kgs.
60 lbs.	29.5 kgs.
70 lbs.	31.8 kgs.
80 lbs.	36.3 kgs.
90 lbs.	40.8 kgs.
100 lbs.	45.4 kgs.
110 lbs.	49.9 kgs.
120 lbs.	54.4 kgs.
130 lbs.	59.0 kgs.
140 lbs.	63.5 kgs.
150 lbs.	68.0 kgs.
160 lbs.	72.6 kgs.
170 lbs.	77.1 kgs.
180 lbs.	81.6 kgs.
190 lbs.	86.2 kgs.
200 lbs.	90.7 kgs.

83

IMPORTANT

ADJUST
Cable Tension Here
BNH2924

85

⚠ WARNING

Keep body, hands and fingers clear of all moving parts.
BNH2926

81

IMPORTANT

For smooth performance, lubricate all gliding surfaces with silicone spray lubricant.
BNH2916

92

TUFFSTUFF FITNESS INTERNATIONAL, INC.
1-888-884-8275
www.tuffstuffitness.com
MODEL
SERIAL #
BNH3147

80

⚠ CAUTION

CHECK
Pull-pin is fully engaged in the hole before use.
BNH2912

91

⚠ DANGER

TIGHTEN this retaining nut before use.
BNH3146

Carefully read ALL Danger, Warning & Caution labels posted on the machine

78

DANGER

Use this equipment ONLY for its intended purpose.

If you are unfamiliar with the equipment or procedure, refer to your Owner's Manual or call TuffStuff at 888-884-8275.

Failure to comply could result in serious injury or death.

BNH2903

82

WARNING

DO NOT Use for Chinning

(Lat bar holder only)

BNH2923

79

WARNING

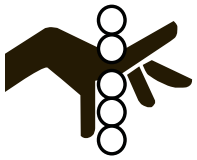

Keep body, hands and fingers clear of all moving parts

BNH2908

86

WARNING

Serious injury or death can occur if these rules and precautions are not observed:

1. **Read and Understand** Owner's Manual and all DANGER, WARNING and CAUTION labels before using this equipment. If you still need help, seek assistance from floor personnel.
2. Obtain a **medical exam** before beginning any exercise program.
3. **Stop exercising** if you feel faint or dizzy. Consult a physician if you are experiencing pain.
4. **Inspect equipment** prior to use for wear and tear, loose fittings, worn or frayed cables/belts and frame welds. Do not use if it appears damaged or inoperable.
5. **Do not attempt to fix** or free any jammed parts by yourself. Seek assistance from floor personnel.
6. **Use this equipment only for the intended use** and for exercise(s) shown in the exercise label.
7. Keep body, clothing and hair **clear from all moving parts.**
8. **Children must not be allowed** near this machine. Teenager must be supervised.
9. **Make sure the selector pin** is completely inserted. Use only the selector pin provided by the manufacturer. If difficulty inserting the pin, seek assistance from floor personnel.
10. **Never pin the weights in an elevated position.** Do not use the machine if found in this condition. Inform floor personnel immediately.
11. **Do not modify selectorized weight stack** with any add-on incremental weights or dumbbells, except those with standard factory installed.
12. **Do not remove labels** affixed to the machine. Replace if damaged.

TuffStuff Fitness International
Chino, CA 91710, USA

BNH3134

85

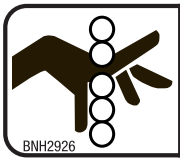

BNH2926

WARNING

Keep body, hands and fingers clear of all moving parts.

91

DANGER

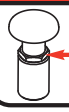

TIGHTEN this retaining nut before use.

BNH3146

81

IMPORTANT

For smooth performance, lubricate all gliding surfaces with silicone spray lubricant.

BNH2916

83

IMPORTANT

ADJUST

Cable Tension Here

BNH2924

84

IMPORTANT

For smooth performance, clean guide rods with Super Lube® spray lubricant and lubricate with Super Lube® (PTFE) grease.

BNH2925

80

CAUTION

CHECK

Pull-pin is fully engaged in the hole before use.

BNH2912

92

TUFFSTUFF FITNESS INTERNATIONAL, INC.

1-888-884-8275

www.tuffstuffitness.com

MODEL _____

SERIAL # _____

BNH3147

93

TOP PLATE 10 lbs.	TOP PLATE 4.5 kgs.
20 lbs.	9.0 kgs.
30 lbs.	13.6 kgs.
40 lbs.	18.1 kgs.
50 lbs.	22.7 kgs.
60 lbs.	29.5 kgs.
70 lbs.	31.8 kgs.
80 lbs.	36.3 kgs.
90 lbs.	40.8 kgs.
100 lbs.	45.4 kgs.
110 lbs.	49.9 kgs.
120 lbs.	54.4 kgs.
130 lbs.	59.0 kgs.
140 lbs.	63.5 kgs.
150 lbs.	68.0 kgs.
160 lbs.	72.6 kgs.
170 lbs.	77.1 kgs.
180 lbs.	81.6 kgs.
190 lbs.	86.2 kgs.
200 lbs.	90.7 kgs.

87

SCHEDULE
Replacement Parts

Recommended TuffStuff Parts (replace or as needed)	9-MONTH	12-MONTH	15-MONTH	18-MONTH
Upholstery	X			
Foam Rolls	X			
Cables		X		
Rubber Grips		X		
Nylon Handles			X	
Pull-Pins			X	
Plastic Guides			X	
Weight Selector Pin			X	
Abdominal Strap			X	
Adj. Release Handle				X
Black Caster Wheels				X
Buckle Seat/Belt				X
Labels (as needed)				

Use only TuffStuff replacement parts when servicing. Failure to do so will void warranty on product and could result in personal injury.

TuffStuff Fitness International
13971 Norton Avenue
Chino, CA 91710

BNH3135

88

WARRANTY

LIGHT COMMERCIAL

TEN (10) YEARS:
- Frames, welds, cams and weight plates

FIVE (5) YEARS:
- Pivot bearings, pulleys, bushings, gas shocks and guide rods

ONE (1) YEAR:
- Belts, linear bearings and pull-pin components

ALL OTHER PARTS not mentioned, one year from the date of delivery to the original purchaser.

SIX (6) MONTHS:
- Upholstery, cables, finish and rubber grips

Light Commercial Use:
Light Commercial warranty applies only to facilities like hotels, apartment complexes, personal training studios, fire & police stations, etc. where the equipment would be used by no more than 30 people per day.

Refer to the Owner's Manual for details, assembly & maintenance requirements, review and understand all danger, warning and caution labels.

All warranty periods begin to run from the date of delivery to the original purchaser. The obligation of TuffStuff under this warranty is limited to repairing or replacing warranted defective parts, as TuffStuff may elect, at TuffStuff's facility in Chino, California, without charge to the Purchaser for either parts or labor. Purchaser is responsible for installation of repaired or replaced parts, and all transportation and insurance costs to and from TuffStuff's facility in Chino. For a detailed copy of the warranty, please contact:

TuffStuff Fitness International
Chino, CA 91710, USA
www.tuffstuffitness.com

BNH3136

89

INSPECTIONS

Recommended Inspection Replace all parts at first signs of wear or damage.	DAILY	WEEKLY	MONTHLY	6-MONTH	YEARLY
INSPECT: Links, pull-pins, snap locks, swivels, connectors, selector pin, and welded-joints.	X				
CLEAN: Upholstery with lanolin-base cleaner. Do not use Windex.	X				
INSPECT: Cables, Belts and tension (adjust if needed).	X				
INSPECT: All labels		X			
INSPECT: All nuts and bolts (tighten if needed).		X			
INSPECT: Accessory bars, handles, rubber grips.		X			
INSPECT: All anti-skid surfaces.		X			
CLEAN & LUBRICATE: Clean guide rods with Super Lube® spray lubricant and lubricate with Super Lube® (PTFE) grease.			X		
LUBRICATE: Seat sleeves, pull-pin sliding mechanism, bushings and linear bearings.			X		
CLEAN & WAX: All powder-coat finishes.				X	
REPLACE: Cables & connecting parts.					X

Use only genuine TuffStuff replacement parts. Failure to do so will void warranty and could result in serious injury or death.

TuffStuff Fitness International
Chino, CA 91710, USA
www.tuffstuffitness.com

BNH3137

90

BE ALERT!

THE FITNESS EQUIPMENT IN THIS FACILITY PRESENTS HAZARDS WHICH, IF NOT AVOIDED, COULD CAUSE SERIOUS INJURY OR DEATH.

Prior to using the equipment, READ the warning labels and instruction placards affixed to each machine.

If you are unsure on how to use a machine, seek the assistance of our floor personnel. We will be happy to instruct you on how to use the equipment properly.

Immediately report any piece of equipment that is not functioning properly to our floor personnel so that it may be evaluated and service promptly.

DO NOT ATTEMPT to use or fix any piece of equipment that is not functioning properly.

ASTM F1749-96 TUFFSTUFF FITNESS INTERNATIONAL, CHINO, CA 91710

BNH3138

It is extremely important that the **BE ALERT!** (90) Sign shown to the left be installed in plain view of the unit.

You should have received it along with this Owners Manual. If you did not receive this Sign with your order, you can obtain one at no cost to you from TuffStuff Fitness by contacting our service department at:

1 (888) 884-8275
service@tuffstuff.net
service1@tuffstuff.net

Important Safety Instructions

It is the responsibility of the facility owner and/or owner of the equipment to review the Owner's Manual with their facility personnel and understand all Danger, Warning and Caution labels affixed on the machine. It is the responsibility of the floor personnel to instruct users on proper operation of the equipment and review all danger, warning and caution labels.

⚠ WARNING SERIOUS INJURY OR DEATH CAN OCCUR IF THESE SAFETY PRECAUTIONS ARE NOT OBSERVED:

1. Obtain a medical exam before beginning any exercise program.
2. Read and understand Owner's Manual and all **Danger, Warning and Caution** labels before using this equipment. If you still need help, seek assistance from floor personnel.
3. **Inspect the equipment** before each use for wear and tear, loose fittings, worn or frayed cables and frame welds. DO NOT USE if it appears to be inoperable or damaged.
4. Stop exercising if you feel faint or dizzy. Consult a physician if you are experiencing pain.
5. **Use this equipment only for the intended use.**
6. Keep body, clothing and hair clear from all moving parts. Do not attempt to free any jammed parts by yourself.
7. Always warm-up before and cool-down after weight training. Warm-up for 10-15 minutes with stretching and cardiovascular exercises. Cool-down should include light stretching exercises for 5-15 minutes.
8. Never hold your breath – will limit the flow of oxygen to your brain and may cause dizziness. The most often used breathing pattern is inhaling during least resistance and exhaling during maximum resistance.
9. Do not use accessories or accessory attachments that are not recommended by TFI.
10. Make sure selector pin is completely inserted. Use only the selector pin provided by the manufacturer.
11. Never pin the weights in an elevated position. Do not use the machine if found in this condition.

Facility Safety Guidelines and Practices

1. Read and understand the Owner's Manual before assembling, servicing or using the equipment.
2. Equipment to be installed by TFI Authorized Dealer or Professional Service Company approved by TFI.
3. Make sure each machine is set up and operated on a solid level surface. Do not install equipment on an uneven surface.
4. Provide an adequate safety perimeter between the machine, walls and other equipment to ensure that the facility has proper clearance for usage and training.
5. Post and disclose all safety, rules and regulations on a bulletin board easily accessible to users.
6. Perform regular maintenance (see Inspection Label). Pay special attention to areas most susceptible to wear and tear, including but not limited to cables, pulleys and rubber grips.
7. **Do not** lean against or pull on the framework, weight stack or any component at all times.
8. **Children must not** be allowed near the equipment. Teenager must be supervised.
9. Replace immediately all parts at first sign of wear or damage. If unable to replace worn or damaged components/parts, remove machine from service until the repair is made.
10. Use only genuine TuffStuff replacement parts. Failure to do so will void warranty and could result in serious injury or death to the users.
11. **Do not remove** any decals affixed to the machine. Replace if damaged.
12. **Do not alter or modify** the original manufacturer's weight stack with any add-on incremental weights, weight plates or dumbbells except those with standard factory installed option.
13. Maintain a service contract with a TFI Authorized Dealer or a Professional Service Company approved by TFI. Keep a service log of all maintenance and repair activities. NOTICE: It is the sole responsibility of the owner or facility operator to ensure that regular maintenance is performed.

⚠ DANGER

DANGER: indicates an imminently hazardous situation which, if not avoided, will result in death or serious injury.

⚠ WARNING

WARNING: indicates a potentially hazardous situation which, if not avoided, will result in death or serious injury.

⚠ CAUTION

CAUTION: indicates a hazardous situation which, if not avoided, could result in minor or moderate injury.

Registration, Service & Assembly

Thank you for purchasing the CHL-610WS High/Low Pulley w/200 Lbs Weight Stack for CSM-600. This machine is part of the TuffStuff line of quality strength training equipment. To maximize your use of the equipment, please study the Owner's Manual thoroughly.

Registration

To avoid unnecessary delays on warranty parts and to insure that a permanent record of your purchase is on file with our company, be sure to register online at:

http://www.tuffstuffitness.com

or mail to address shown below within 10 days of purchase.

Obtaining Service

Please use this Owner's Manual as your guide to all parts included in your shipment. When ordering parts, you must specify the part number and description from this manual. **Use only genuine TuffStuff replacement parts when servicing the equipment.** Failure to do so will void warranty and could result in serious injury or death.

For information about product operation or service:

Phone:	909-629-1600 Toll Free 888-884-8275
Fax:	909-629-4967
E-mail:	service@tuffstuff.net or service1@tuffstuff.net
Hours:	M–F 8:00 – 4:30 PST
Or write to:	TuffStuff Fitness International, Inc. Customer Service 13971 Norton Avenue, Chino, CA 91710

Retain this Owner's Manual for future reference when ordering service or parts. To assist you better, please be prepared to provide the following information:

1. Model Number **2. Place of Purchase**
3. Serial Number **4. Part # and Description**

Required Tools

The basic tools that you will need to assemble the CHL-610WS but are not limited to:

- 7/16", 9/16", 3/4" Combination Wrenches
- Ratchet Wrench with 7/16", 9/16", 3/4" sockets
- Crescent Adjustable Wrench
- External retaining ring pliers
- Rubber mallet, measuring tape & utility knife
- Super Lube® spray lubricant and grease
- Windex or household glass cleaner

Assembly Requirements

Follow these installation requirements when assembling the CHL-610WS. Use the overhead view on the Content Page to layout your floor plan before assembling.

Set up the CHL-610WS on a clean, solid, flat surface. A smooth, flat surface under the machine helps keep it level.

Allow ample space around the machine for safe unrestricted use and easier access.

Insert all bolts in the same direction. For aesthetic appearance, insert all bolts in the same direction unless specified (in text or illustration) to do otherwise.

Leave room for adjustments. Do not fully tighten fasteners until instructed in the assembly steps to do so (to prevent any difficulty with alignment of parts during the assembly process). When not instructed, tighten fasteners such as bolts, nuts and screws so the unit is stable, but leave room for adjustments.

Assembly Tips

Read all "Notes" on each page before beginning each step.

While you may be able to assemble the CHL-610WS using the illustrations only, IMPORTANT safety notes and other tips are included in the text.

Some pieces may have extra holes that you will not use. Use only those holes indicated in the instructions and illustration.

NOTE: With so many assembled parts, proper alignment and adjustment is critical. While tightening the nuts and bolts, be sure to leave room for final adjustments.

CAUTION: Obtain assistance from TuffStuff if you have difficulty assembling the CHL-610WS. Please do not attempt to complete the assembly as this could result in equipment failure and serious injuries to the users.

Symbols & Description

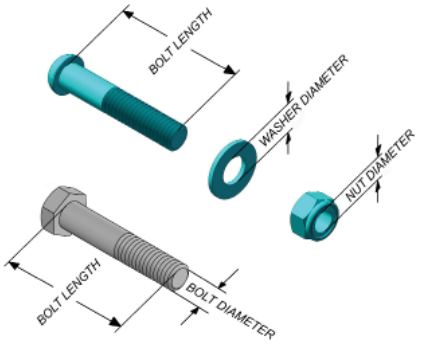

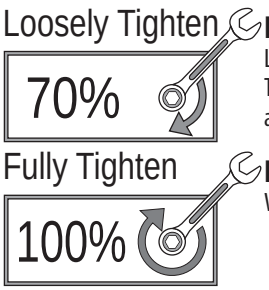

Loosely Tighten
Loosely tighten all hardware in this step. DO NOT Fully Tighten. Some component(s) may need pre-assembly and or alignment during the assembly process.

Fully Tighten
Wrench tighten all hardware in this step.

Inspection/Maintenance

Perform regular maintenance (see Inspection Label). Pay special attention to areas most susceptible to wear and tear, including but not limited to cables, pulleys and rubber grip. TFI recommends you maintain a service contract with a TFI Authorized Dealer or a Professional Service Company approved by TFI. Keep a service log of all maintenance and repair activities. Extra copies can be downloaded from our website www.tuffstuffitness.com

INSPECTIONS

Recommended Inspection Replace all parts at first signs of wear or damage.	DAILY	WEEKLY	MONTHLY	6-MONTH	YEARLY
INSPECT: Links, pull-pins, snap locks, swivels, connectors, selector pin, and welded-joints.	X				
CLEAN: Upholstery with lanolin-base cleaner. Do not use Windex.	X				
INSPECT: Cables, Belts and tension (adjust if needed).	X				
INSPECT: All labels		X			
INSPECT: All nuts and bolts (tighten if needed).		X			
INSPECT: Accessory bars, handles, rubber grips.		X			
INSPECT: All anti-skid surfaces.		X			
CLEAN & LUBRICATE: Clean guide rods with Super Lube® spray lubricant and lubricate with Super Lube® (PTFE) grease.			X		
LUBRICATE: Seat sleeves, pull-pin sliding mechanism, bushings and linear bearings.			X		
CLEAN & WAX: All powder-coat finishes.				X	
REPLACE: Cables & connecting parts.					X

Use only genuine TuffStuff replacement parts. Failure to do so will void warranty and could result in serious injury or death.

TuffStuff Fitness International
Chino, CA 91710, USA
www.tuffstuffitness.com BNH3137

INSPECTION / MAINTENANCE RECORDS

DATE	REPLACEMENT	REPAIRS	INSPECTED BY

WARRANTY REPAIRS

DATE	REPLACEMENT	REPAIRS	INSPECTED BY

Cable Inspection

WARNING:

THE FOLLOWING CONDITIONS MAY INDICATE A WORN CABLE. REPLACE IMMEDIATELY.

"NECKING", STRECHED CABLE COVERING

A CRACK IN THE CABLE COVER

A TEAR IN THE CABLE COVER

A BREAK ON THE CABLE

CABLE END SLIPPING OUT

IMPORTANT NOTE:

DAMAGED OR WORNED CABLE (AS SHOWN ABOVE) MAY DAMAGE THE PULLEY(S). YOU MUST INSPECT THE PULLEYS AT THIS TIME FOR WEAR AND TEAR. REPLACE IF NEEDED.

Step 1 (Remove CSM-600 Top Cross Brace)

Note:
Before attaching the **CHL-610WS** to the **CSM-600**, please remove the **Top Cross Brace (#21)** following the below illustration.

Remove

100%

Remove hardware assemblies completely to allow finishing successive assembly steps.

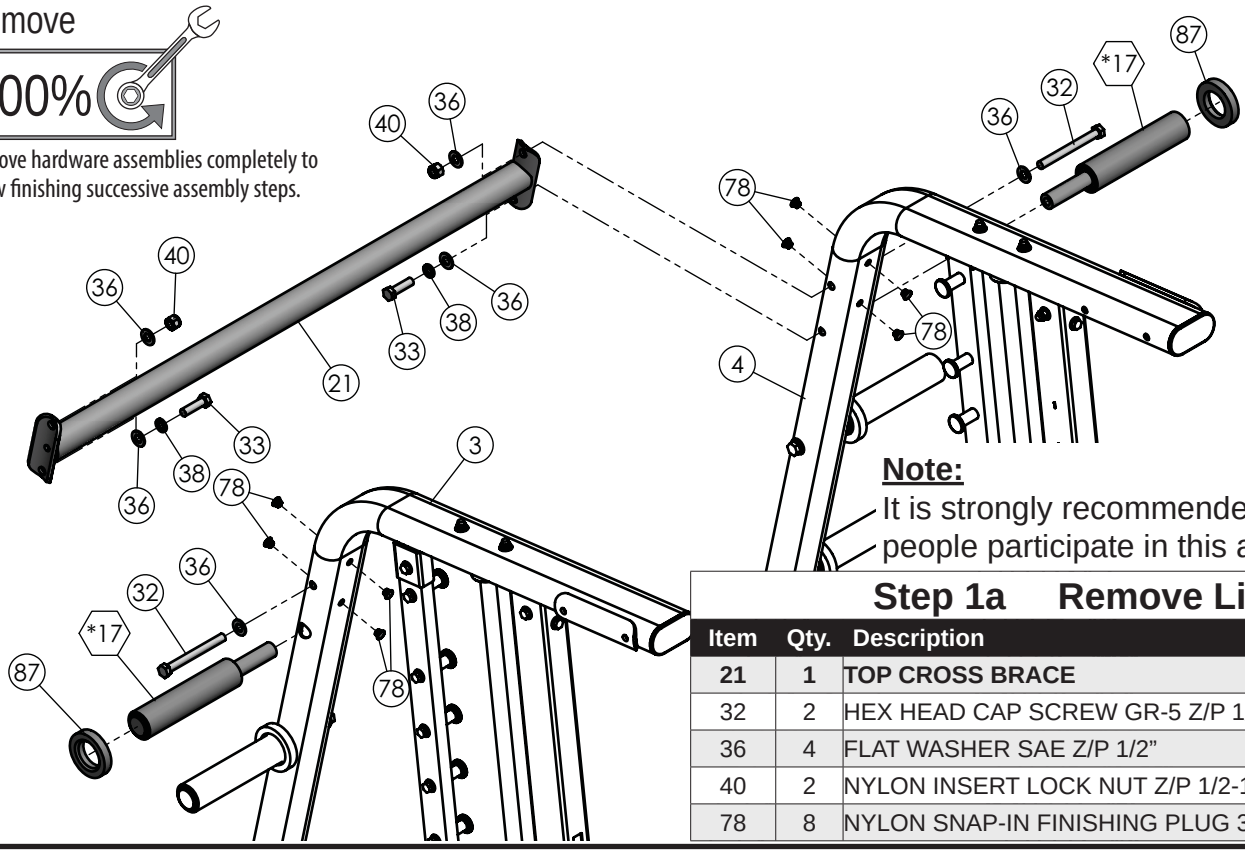

Note:
It is strongly recommended that two people participate in this assembly step.

Step 1a Remove List

Item	Qty.	Description
21	**1**	**TOP CROSS BRACE**
32	2	HEX HEAD CAP SCREW GR-5 Z/P 1/2-13 X 4 3/4
36	4	FLAT WASHER SAE Z/P 1/2”
40	2	NYLON INSERT LOCK NUT Z/P 1/2-13
78	8	NYLON SNAP-IN FINISHING PLUG 3/8”

Note:
After Removing the **Top Cross Brace (#21),** reassemble the **Olympic Adapters (#*17)** following the below illustration.

Fully Tighten

100%

Wrench tighten all hardware in this step.

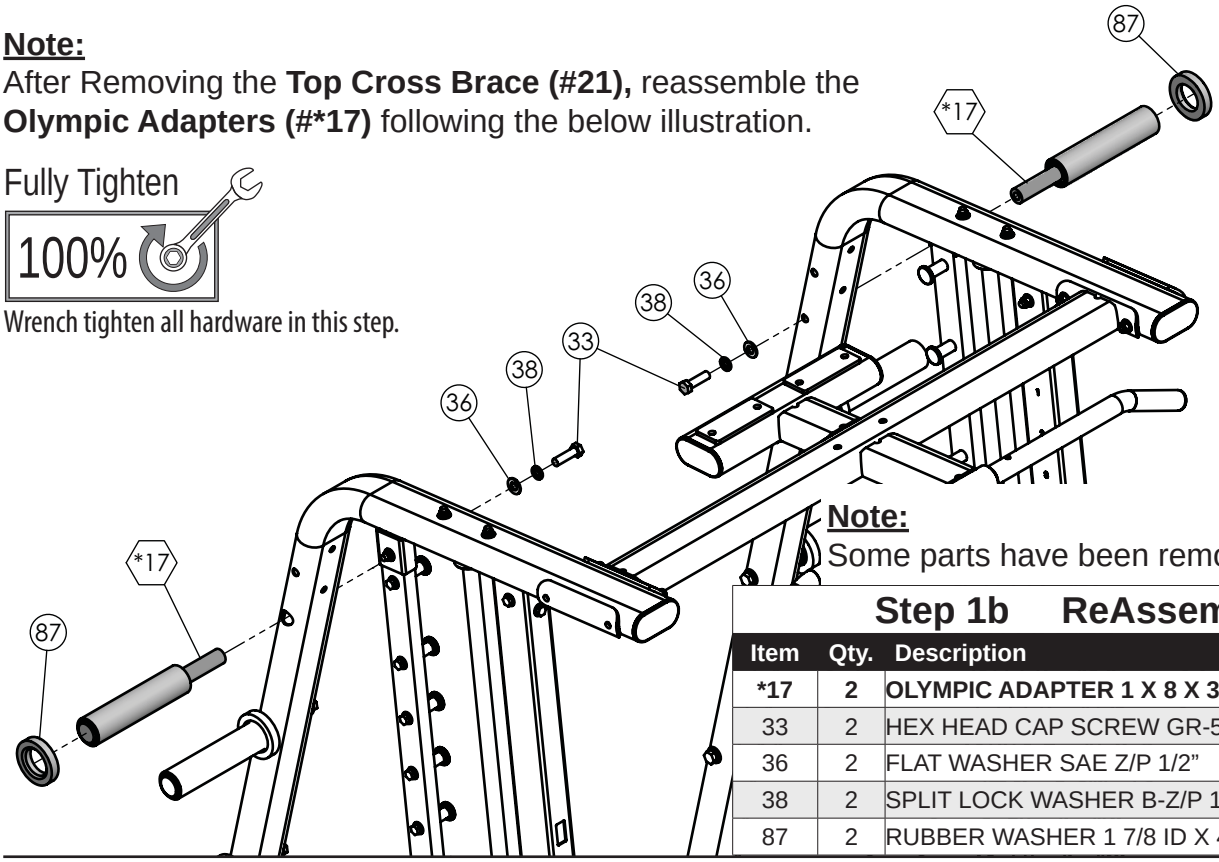

Note:
Some parts have been removed for Clarity.

Step 1b ReAssembly List

Item	Qty.	Description
***17**	**2**	**OLYMPIC ADAPTER 1 X 8 X 3 9/16 AXLE ASSEMBLY**
33	2	HEX HEAD CAP SCREW GR-5 Z/P 1/2-13 X 1 1/2
36	2	FLAT WASHER SAE Z/P 1/2”
38	2	SPLIT LOCK WASHER B-Z/P 1/2”
87	2	RUBBER WASHER 1 7/8 ID X 4 1/4 OD X 9/16 TK

Step 2

Step 2 Assembly List		
Item	**Qty.**	**Description**
4	1	SELECTOR POST LT
5	1	SELECTOR POST RT
*10	1	CARRIAGE LT ASSEMBLY
*11	1	CARRIAGE RT ASSEMBLY

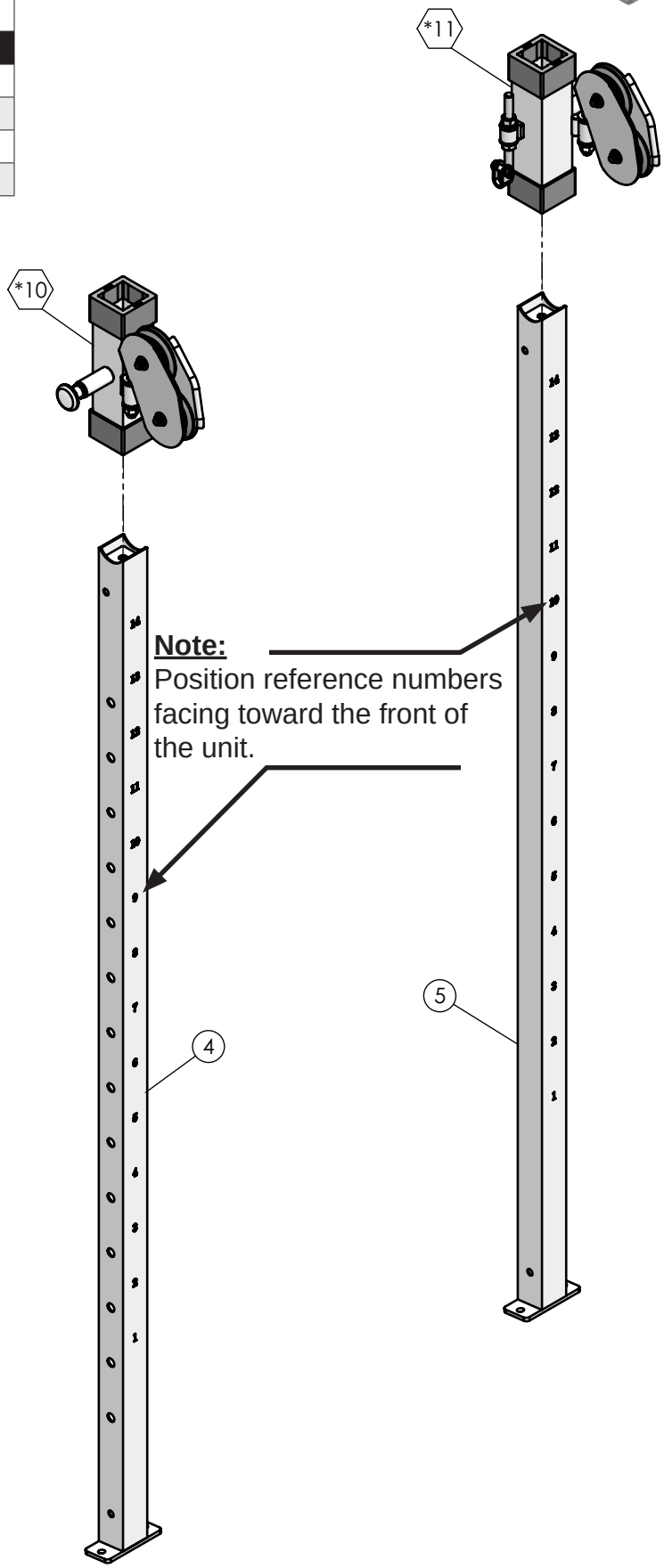

Step 3

Note:
It is strongly recommended that two people participate in this assembly step.

Note:
Some parts have been removed for Clarity.

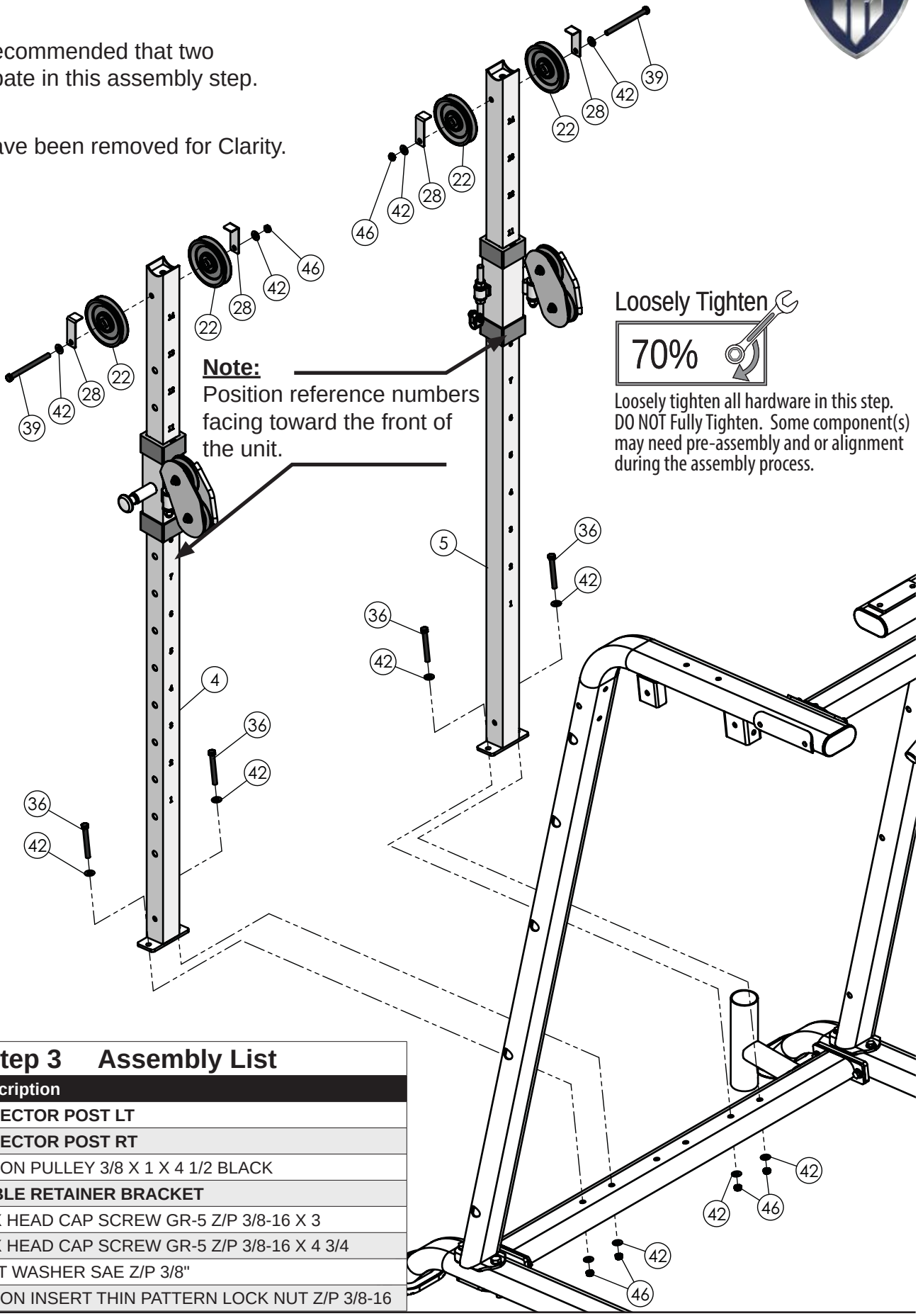

Step 3 Assembly List		
Item	**Qty.**	**Description**
4	**1**	**SELECTOR POST LT**
5	**1**	**SELECTOR POST RT**
22	4	NYLON PULLEY 3/8 X 1 X 4 1/2 BLACK
28	**4**	**CABLE RETAINER BRACKET**
36	4	HEX HEAD CAP SCREW GR-5 Z/P 3/8-16 X 3
39	2	HEX HEAD CAP SCREW GR-5 Z/P 3/8-16 X 4 3/4
42	12	FLAT WASHER SAE Z/P 3/8"
46	6	NYLON INSERT THIN PATTERN LOCK NUT Z/P 3/8-16

Step 4

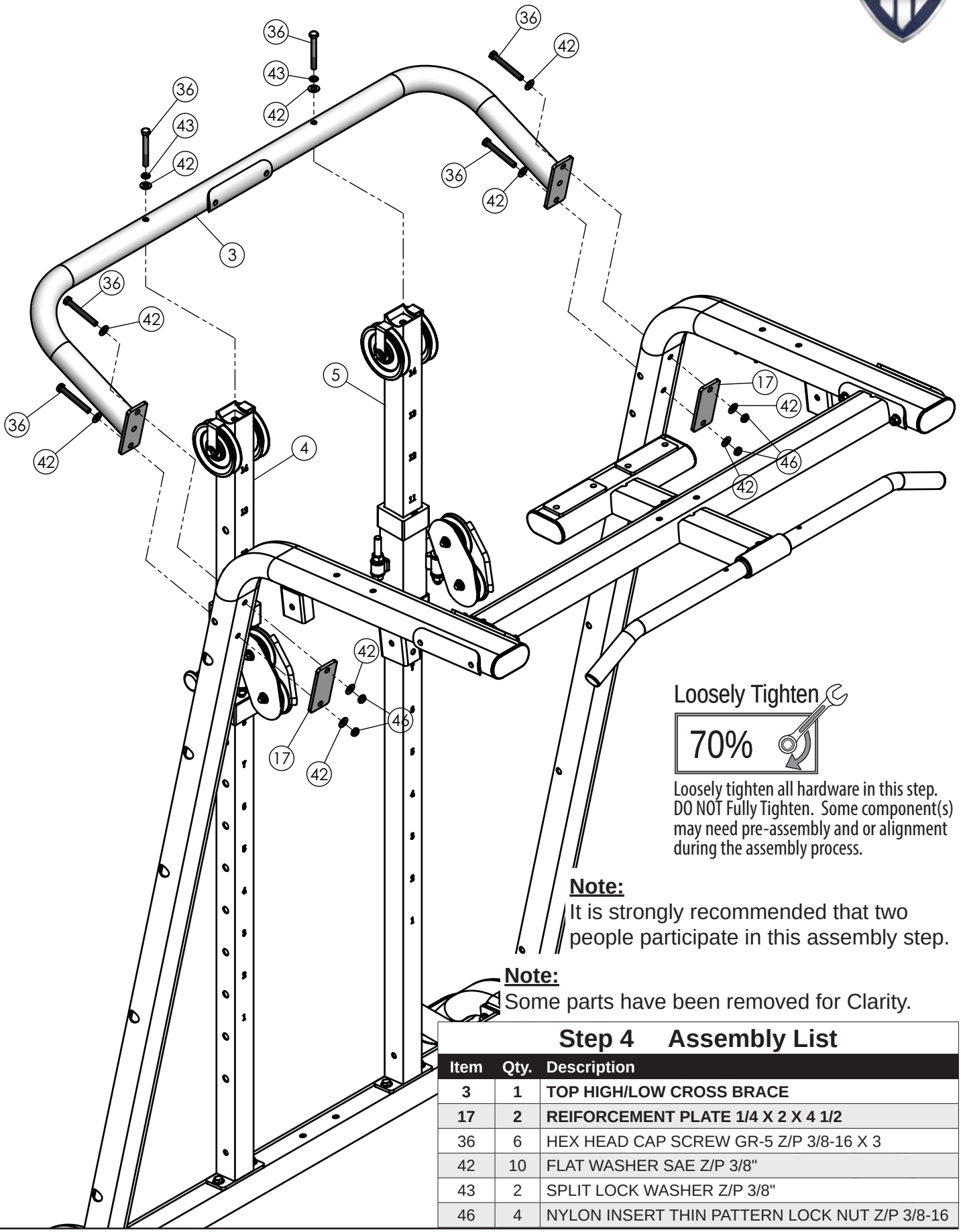

Loosely Tighten

70%

Loosely tighten all hardware in this step. DO NOT Fully Tighten. Some component(s) may need pre-assembly and or alignment during the assembly process.

Note:
It is strongly recommended that two people participate in this assembly step.

Note:
Some parts have been removed for Clarity.

Step 4 Assembly List

Item	Qty.	Description
3	**1**	**TOP HIGH/LOW CROSS BRACE**
17	**2**	**REIFORCEMENT PLATE 1/4 X 2 X 4 1/2**
36	6	HEX HEAD CAP SCREW GR-5 Z/P 3/8-16 X 3
42	10	FLAT WASHER SAE Z/P 3/8"
43	2	SPLIT LOCK WASHER Z/P 3/8"
46	4	NYLON INSERT THIN PATTERN LOCK NUT Z/P 3/8-16

Step 5

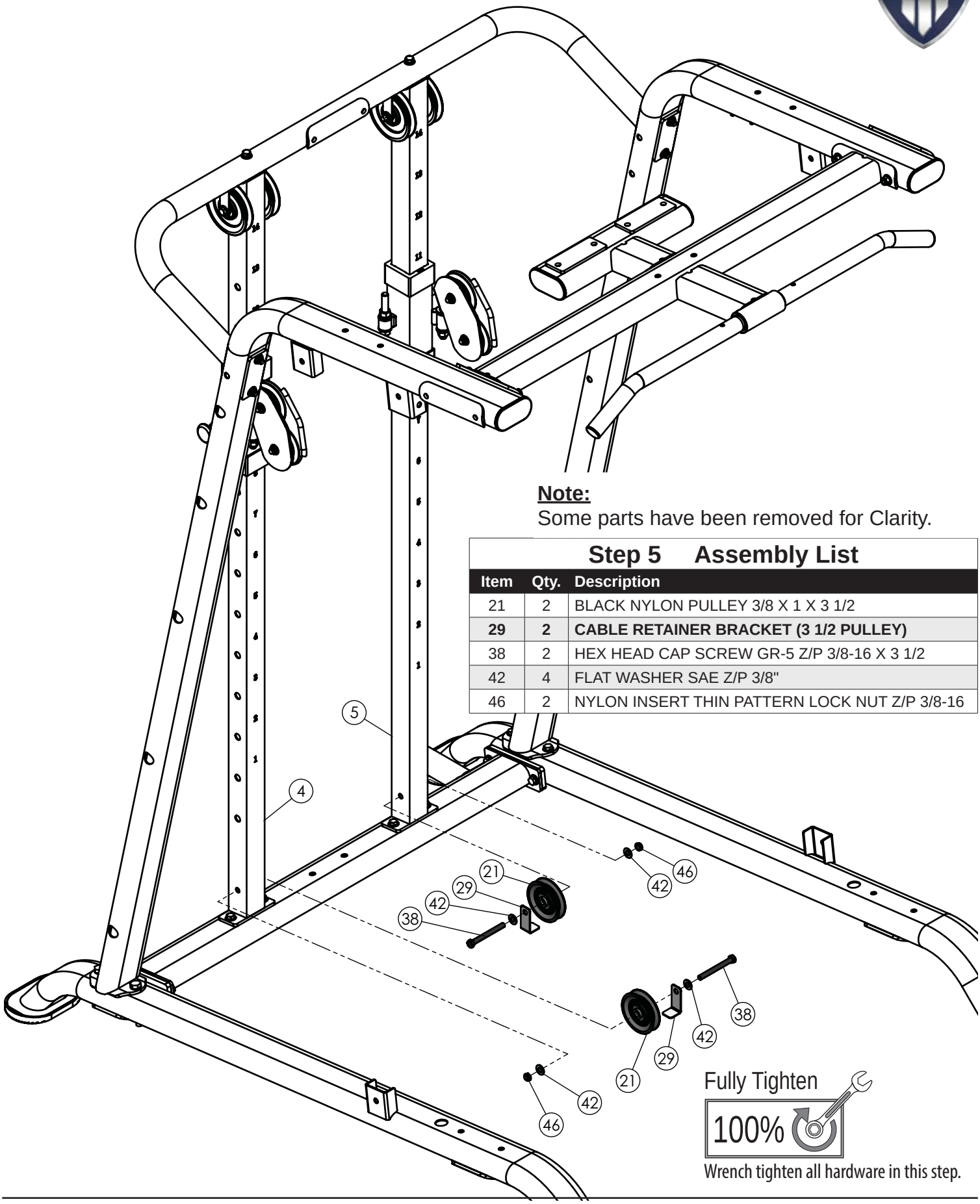

Note:
Some parts have been removed for Clarity.

Step 5 Assembly List

Item	Qty.	Description
21	2	BLACK NYLON PULLEY 3/8 X 1 X 3 1/2
29	**2**	**CABLE RETAINER BRACKET (3 1/2 PULLEY)**
38	2	HEX HEAD CAP SCREW GR-5 Z/P 3/8-16 X 3 1/2
42	4	FLAT WASHER SAE Z/P 3/8"
46	2	NYLON INSERT THIN PATTERN LOCK NUT Z/P 3/8-16

Step 6

Step 6 Assembly List		
Item	**Qty.**	**Description**
21	6	BLACK NYLON PULLEY 3/8 X 1 X 3 1/2
22	2	NYLON PULLEY 3/8 X 1 X 4 1/2 BLACK
32	8	HEX HEAD CAP SCREW GR-5 Z/P 3/8-16 X 1 3/4
37	2	HEX HEAD CAP SCREW GR-5 Z/P 3/8-16 X 3 5/32
42	20	FLAT WASHER SAE Z/P 3/8"
46	10	NYLON INSERT THIN PATTERN LOCK NUT Z/P 3/8-16
***1**	**1**	**LOWER BASE FRAME ASSEMBLY**
***8**	**1**	**REINFORCEMENT PLATE W/PULLEY BKTS ASM**
***54**	**1**	**ADJUSTABLE FOOT SUPPORT**

Note:
Some parts have been removed for Clarity.

Fully Tighten

100%

Wrench tighten all hardware in this step.

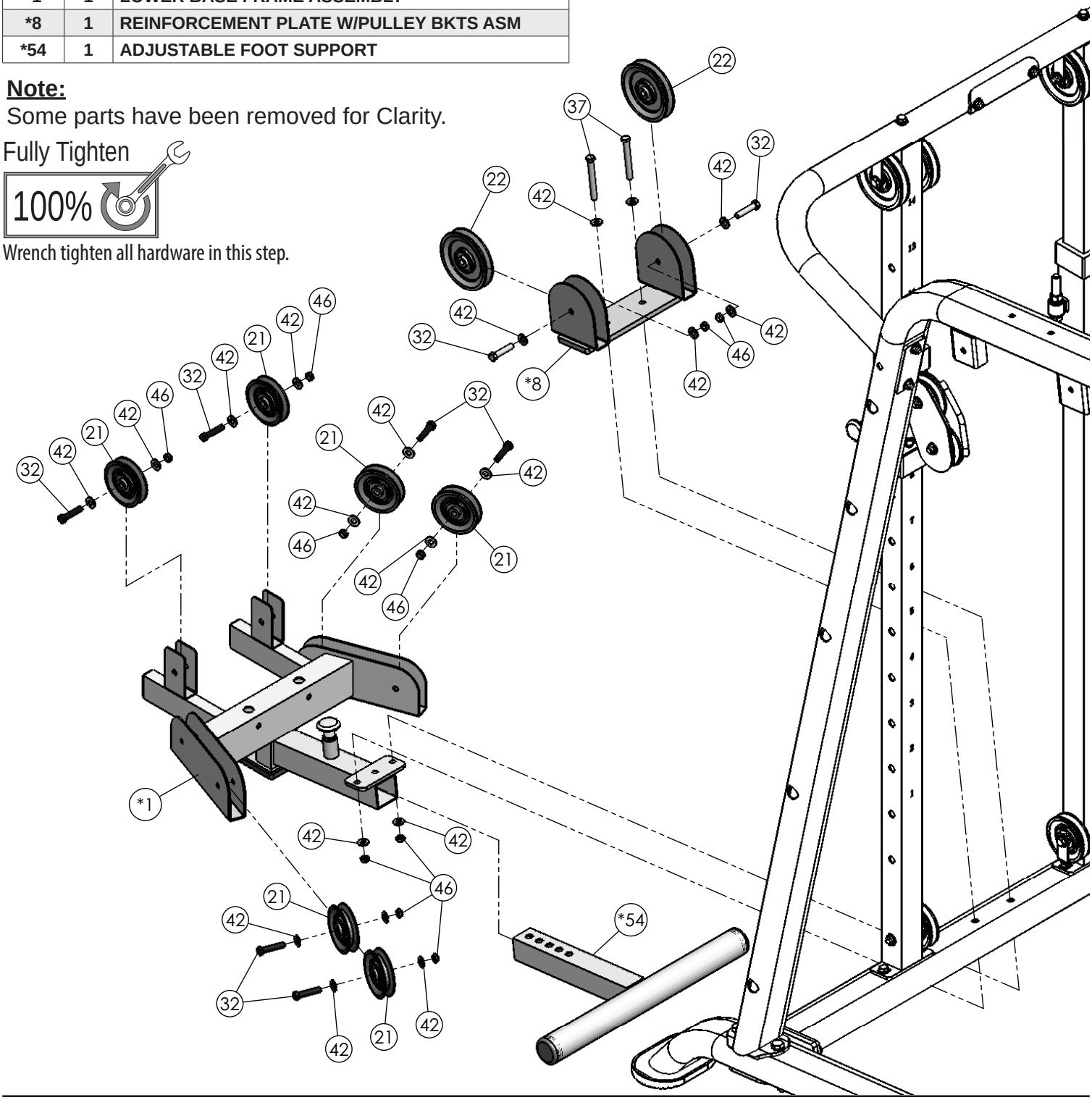

Step 7

Step 7 Assembly List

Item	Qty.	Description
16	**2**	**GUIDE ROD 3/4 X 73 5/8**
30	4	RUBBER DONUT 3/4 X 2 1/2
48	**1**	**SELECTOR PIN W/COIL 3/8 X 4 GOLD KNOB**
44	1	SPLIT LOCK WASHER Z/P 1/2"
47	1	FINISHED HEX NUT Z/P 1/2-13
12	**1**	**ADJUSTABLE PULLEY BRACKET**
21	1	BLACK NYLON PULLEY 3/8 X 1 X 3 1/2
32	1	HEX HEAD CAP SCREW GR-5 Z/P 3/8-16 X 1 3/4
42	2	FLAT WASHER SAE Z/P 3/8"
46	1	NYLON INSERT THIN PATTERN LOCK NUT Z/P 3/8-16
*20	1	10 LB TOP PLATE W/22" SLTR BAR 19 BLK WTS ASSY
*57	19	10 LB STEEL WEIGHT PLATE BLK 4 9/16 X 9 7/16 ASM

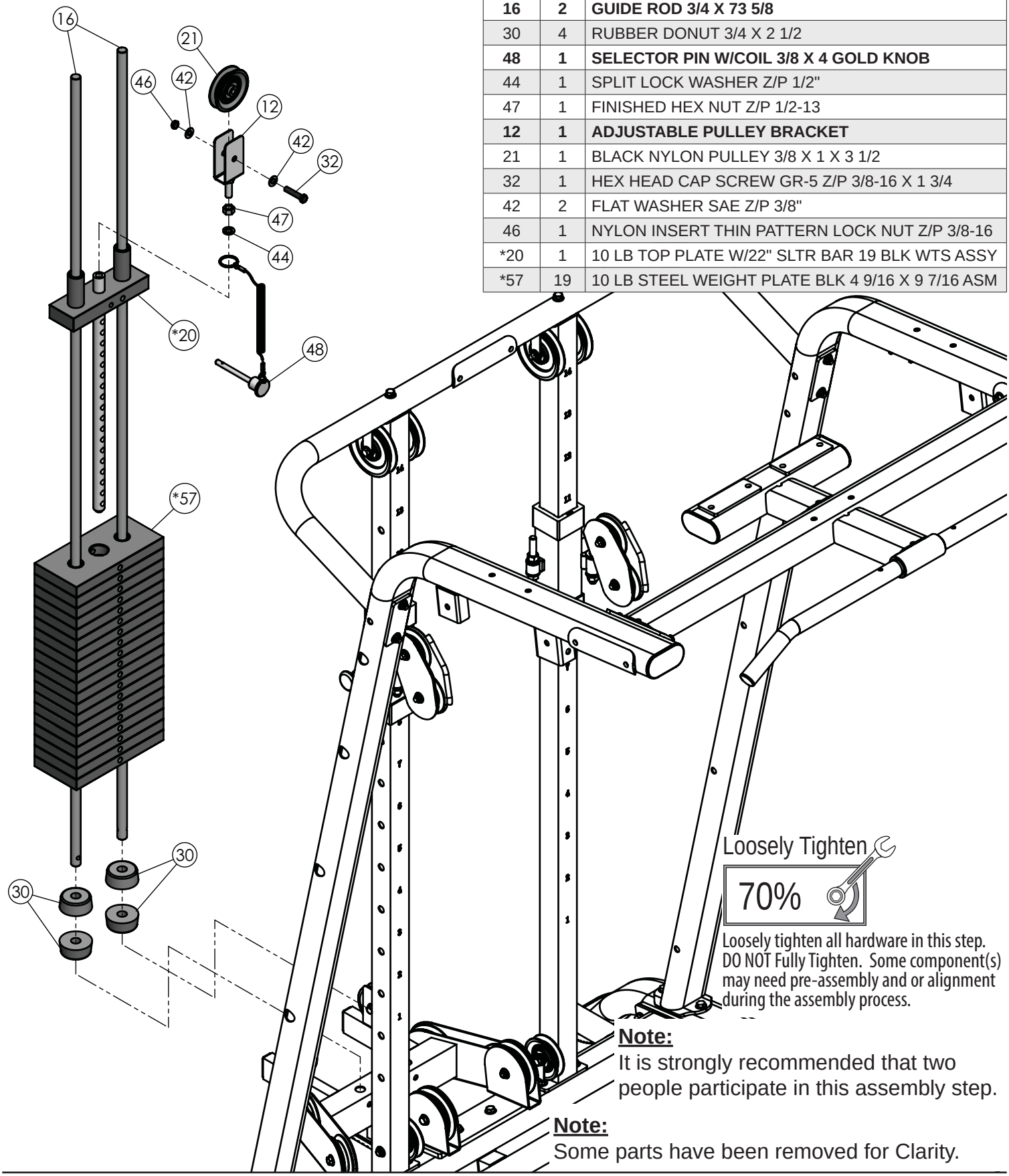

Loosely Tighten

70%

Loosely tighten all hardware in this step. DO NOT Fully Tighten. Some component(s) may need pre-assembly and or alignment during the assembly process.

Note:
It is strongly recommended that two people participate in this assembly step.

Note:
Some parts have been removed for Clarity.

Step 8

Step 8 Assembly List

Item	Qty.	Description
21	6	BLACK NYLON PULLEY 3/8 X 1 X 3 1/2
32	6	HEX HEAD CAP SCREW GR-5 Z/P 3/8-16 X 1 3/4
42	16	FLAT WASHER SAE Z/P 3/8"
46	8	NYLON INSERT THIN PATTERN LOCK NUT Z/P 3/8-16
36	2	HEX HEAD CAP SCREW GR-5 Z/P 3/8-16 X 3
***2**	**1**	**TOP GUIDE ROD RETAINER ASSEMBLY**

Note:
Some parts have been removed for Clarity.

Note:
It is strongly recommended that two people participate in this assembly step.

Fully Tighten

Wrench tighten all hardware in this step.

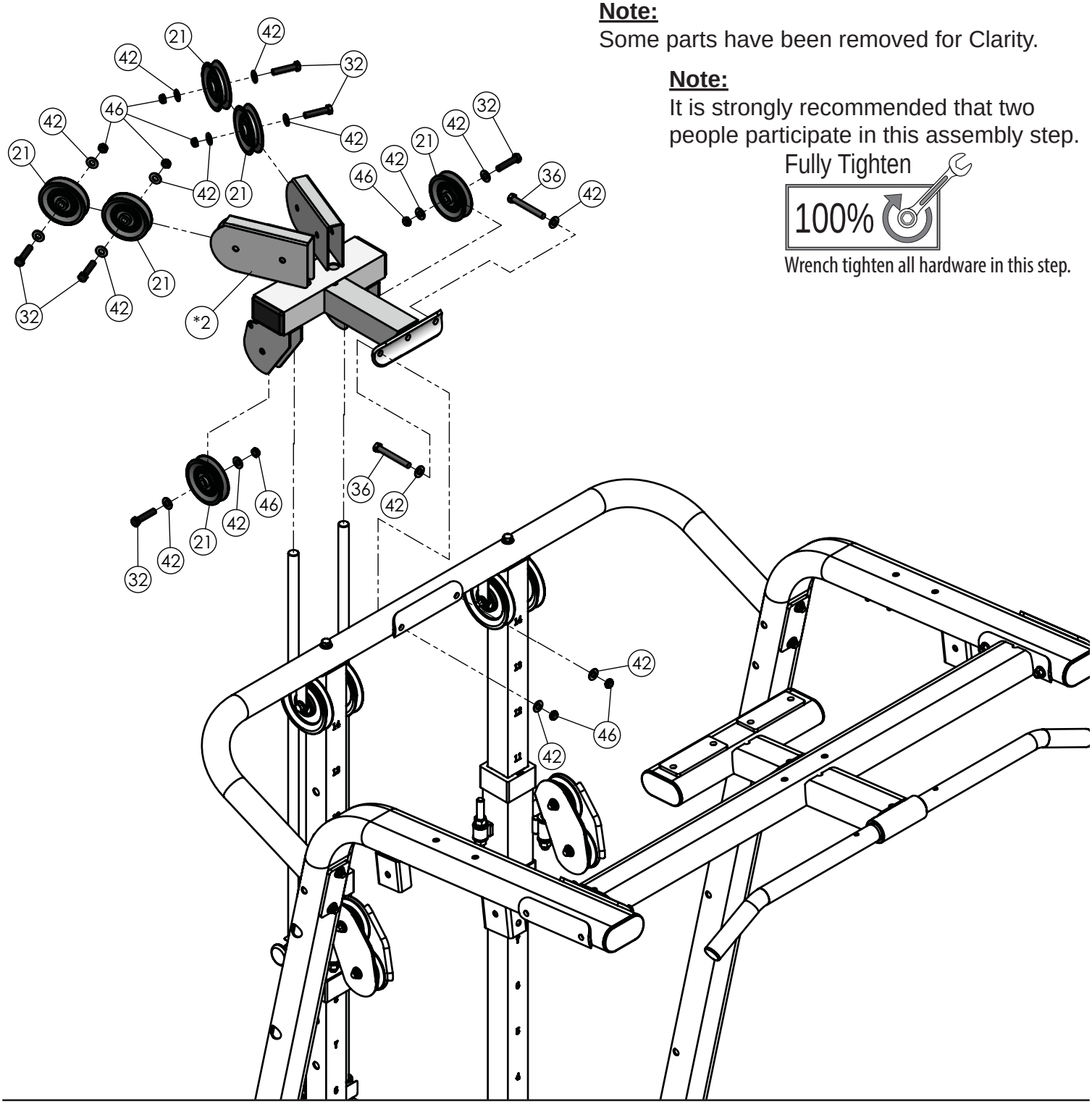

Step 9

Step 9 Assembly List		
Item	**Qty.**	**Description**
16	**2**	**GUIDE ROD 3/4 X 73 5/8**
34	2	HEX HEAD CAP SCREW GR-5 Z/P 3/8-16 X 2 1/2
42	4	FLAT WASHER SAE Z/P 3/8"
46	2	NYLON INSERT THIN PATTERN LOCK NUT Z/P 3/8-16
***1**	**1**	**LOWER BASE FRAME ASSEMBLY**

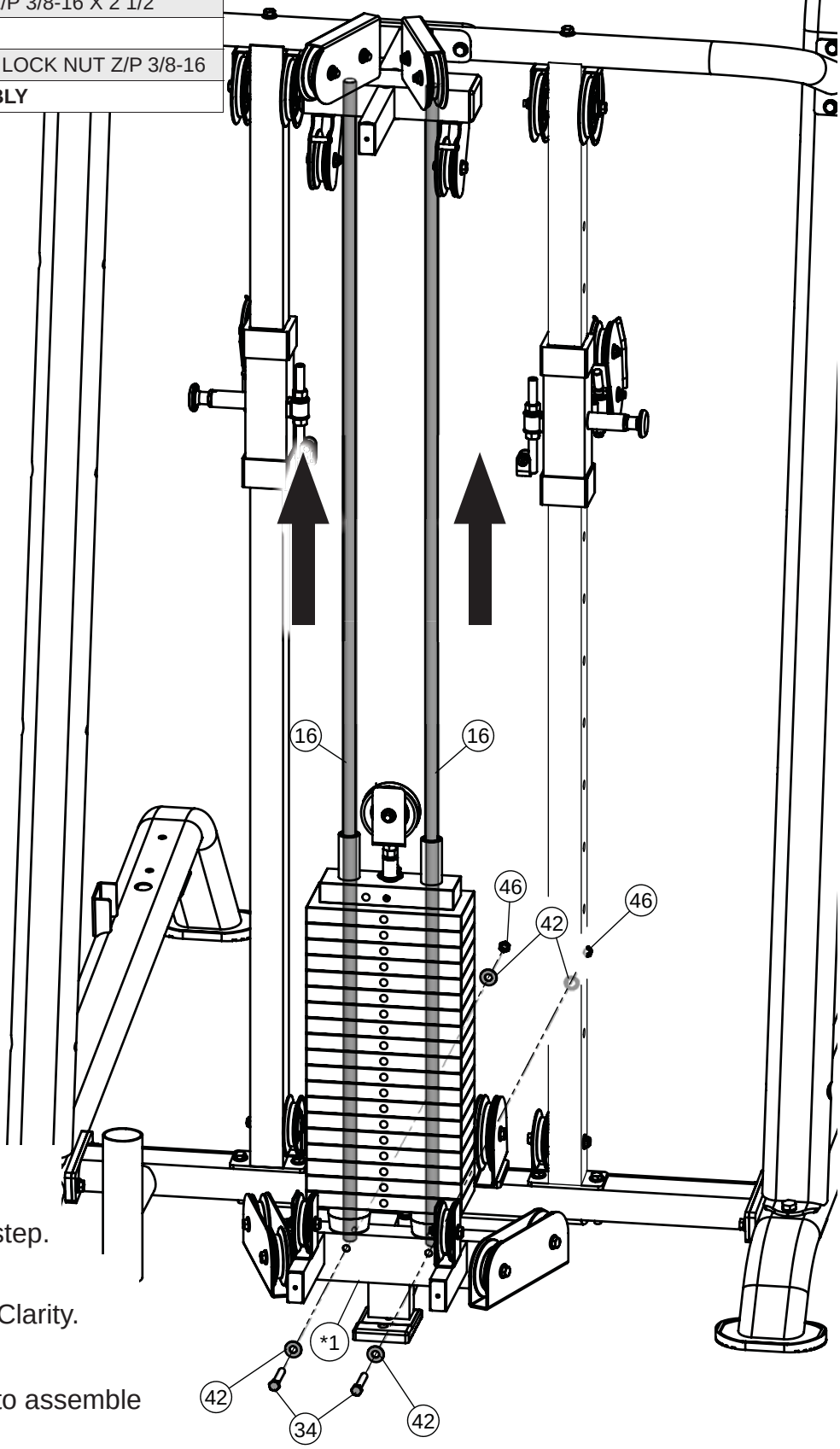

Fully Tighten

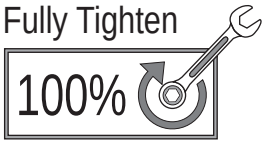

Wrench tighten all hardware in this step.

Note:
It is strongly recommended that two people participate in this assembly step.

Note:
Some parts have been removed for Clarity.

Note:
Raise and hold **Guide Rods** (16) up to assemble hardware as shown.

Step 10

NOTE:

1. TOP PLATE LABEL GOES ON HOLE OFF CENTER AS SHOWN BELOW. LABEL WILL COVER HOLE ON CENTER.

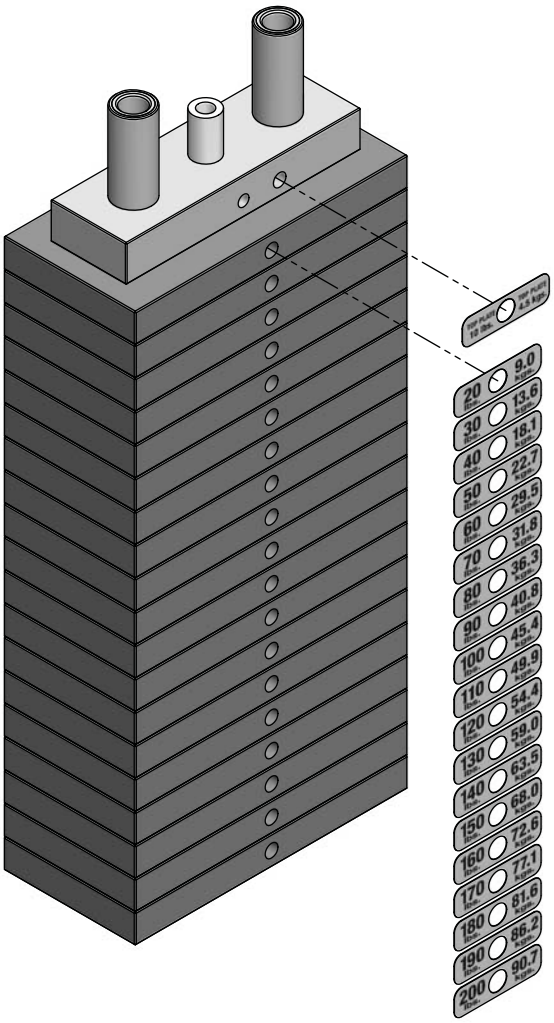

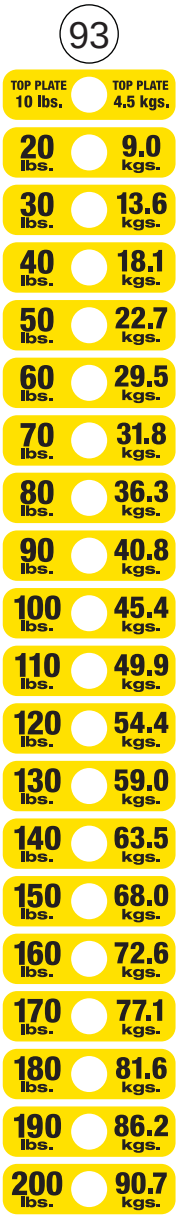

Weight stack label and lubrication instructions

1. Wipe front surface of weight stack with rubbing alcohol and wipe dry.
2. Peel off back sheet (adhesive side) from label (#93) and make sure that the label remains attached to the application tape.
3. Line up hole of the second label to the hole of the first weight plate.
4. Make sure the hole of the last label lines up with the hole of the last weight plate and slowly press into place.
5. Gently remove application tape and rub each label firmly against the weight stack.
6. Once this is complete, repeat this procedure for Top Plate label.
7. Allow labels to stand for 2 days to allow adhesive to cure fully.
8. Open the lube package provided and apply a thin film of lubricant around the first 3 inches of the guide rods above the Top Plate.
9. After the cables are installed, do a set of reps to spread the lubricant thoroughly.

Step 11

Note:
Some parts have been removed for Clarity.

Note:
It is strongly recommended that two people participate in this assembly step.

Step 11 Assembly List

Item	Qty.	Description
36	4	HEX HEAD CAP SCREW GR-5 Z/P 3/8-16 X 3
35	2	HEX HEAD CAP SCREW GR-5 Z/P 3/8-16 X 2 3/4
22	2	NYLON PULLEY 3/8 X 1 X 4 1/2 BLACK
32	2	HEX HEAD CAP SCREW GR-5 Z/P 3/8-16 X 1 3/4
42	16	FLAT WASHER SAE Z/P 3/8"
46	8	NYLON INSERT THIN PATTERN LOCK NUT Z/P 3/8-16
***6**	**2**	**TOP SWIVEL PULLEY BRACKET ASSEMBLY**
***7**	**1**	**LAT HOLDER ASSEMBLY**

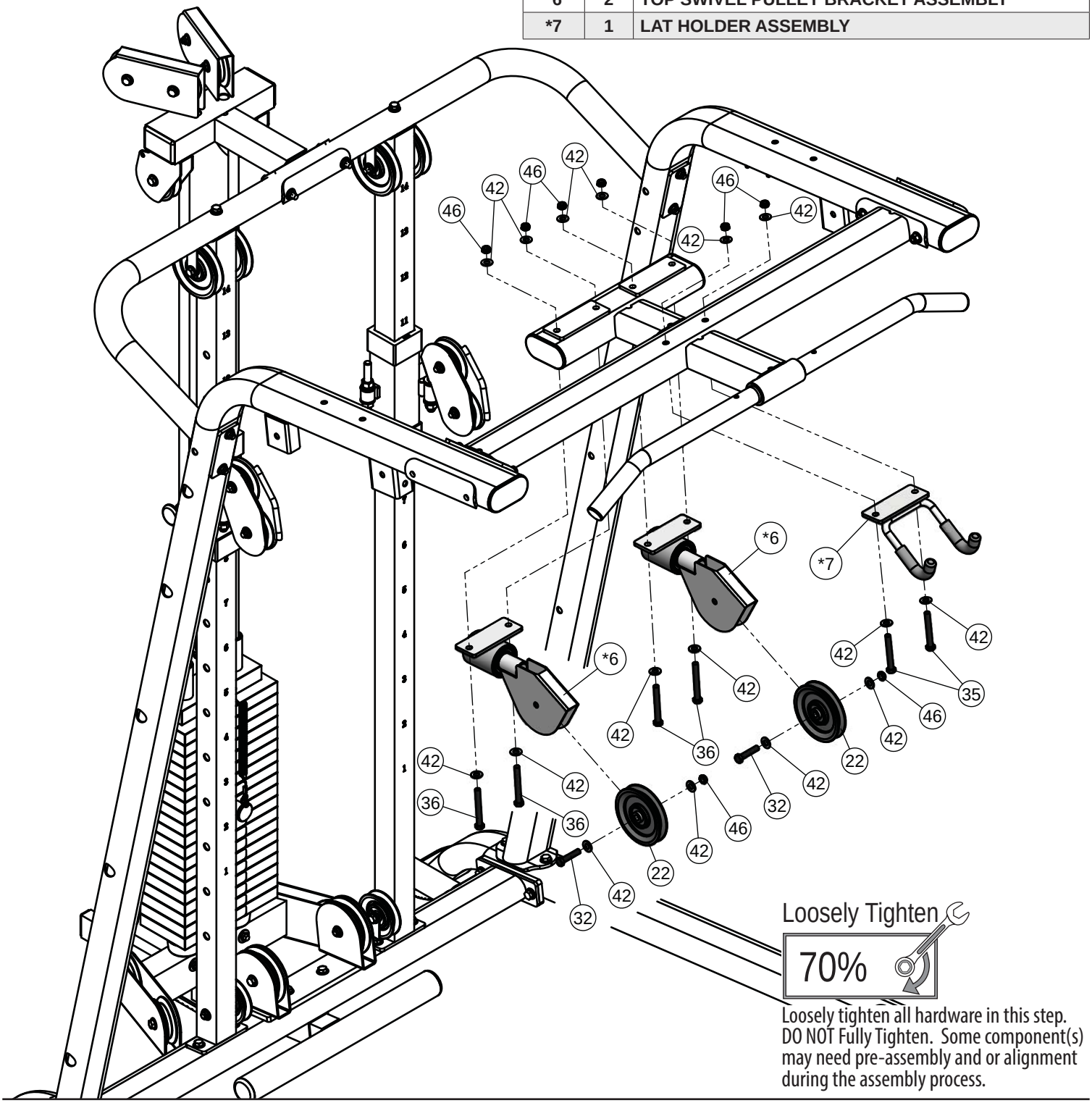

Loosely tighten all hardware in this step. DO NOT Fully Tighten. Some component(s) may need pre-assembly and or alignment during the assembly process.

Step 12

Step 12 Assembly List		
Item	**Qty.**	**Description**
14	**1**	**FLOATING DOUBLE PULLEY BRACKET LT**
15	**1**	**FLOATING DOUBLE PULLEY BRACKET RT**
21	10	BLACK NYLON PULLEY 3/8 X 1 X 3 1/2
32	10	HEX HEAD CAP SCREW GR-5 Z/P 3/8-16 X 1 3/4
42	20	FLAT WASHER SAE Z/P 3/8"
46	10	NYLON INSERT THIN PATTERN LOCK NUT Z/P 3/8-16
***10**	**1**	**CARRIAGE LT ASSEMBLY**
***11**	**1**	**CARRIAGE RT ASSEMBLY**
***13**	**2**	**FLOATING ADJUSTABLE PULLEY BRACKET ASM**

Fully Tighten

100%

Wrench tighten all hardware in this step.

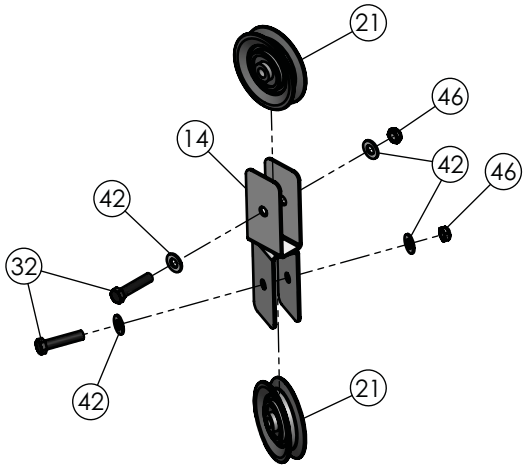

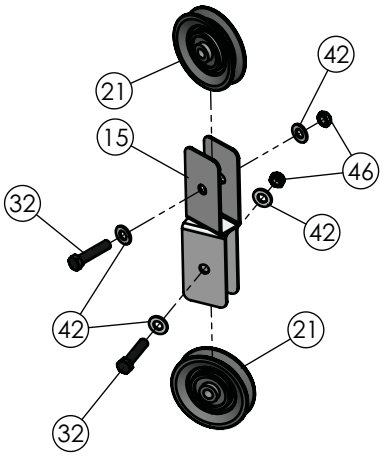

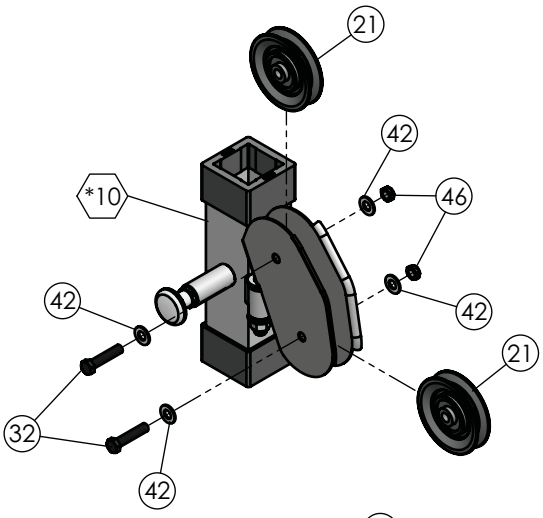

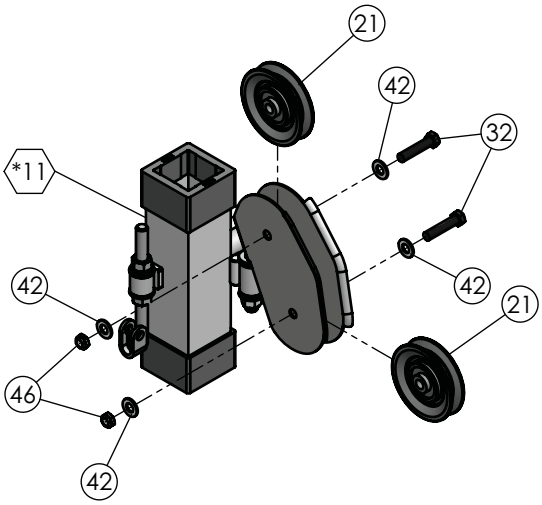

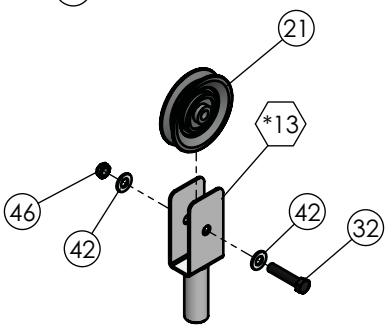

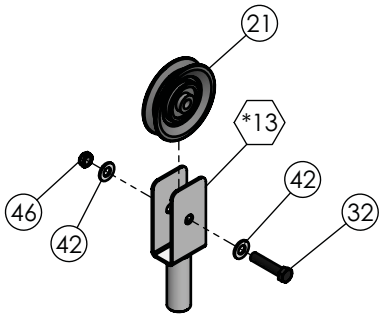

Step 13 Lat Cable Assembly

Note:
Continue on Next Page.

Step 13 Assembly List		
Item	**Qty.**	**Description**
23	**1**	**LAT CABLE**
31	1	SNAP LINK Z/P 8MM X 80MM
74	1	7/8 RD X 1 5/8 LINK 3/16 CABLE
75	1	CABLE STOPPER SHELL 1 1/2 X 1 3/4
76	1	OVAL HEAD SCREW Z/P #10-32 X 1 1/8
14	**1**	**FLOATING DOUBLE PULLEY BRACKET LT**

Note:
Some parts have been removed for Clarity.

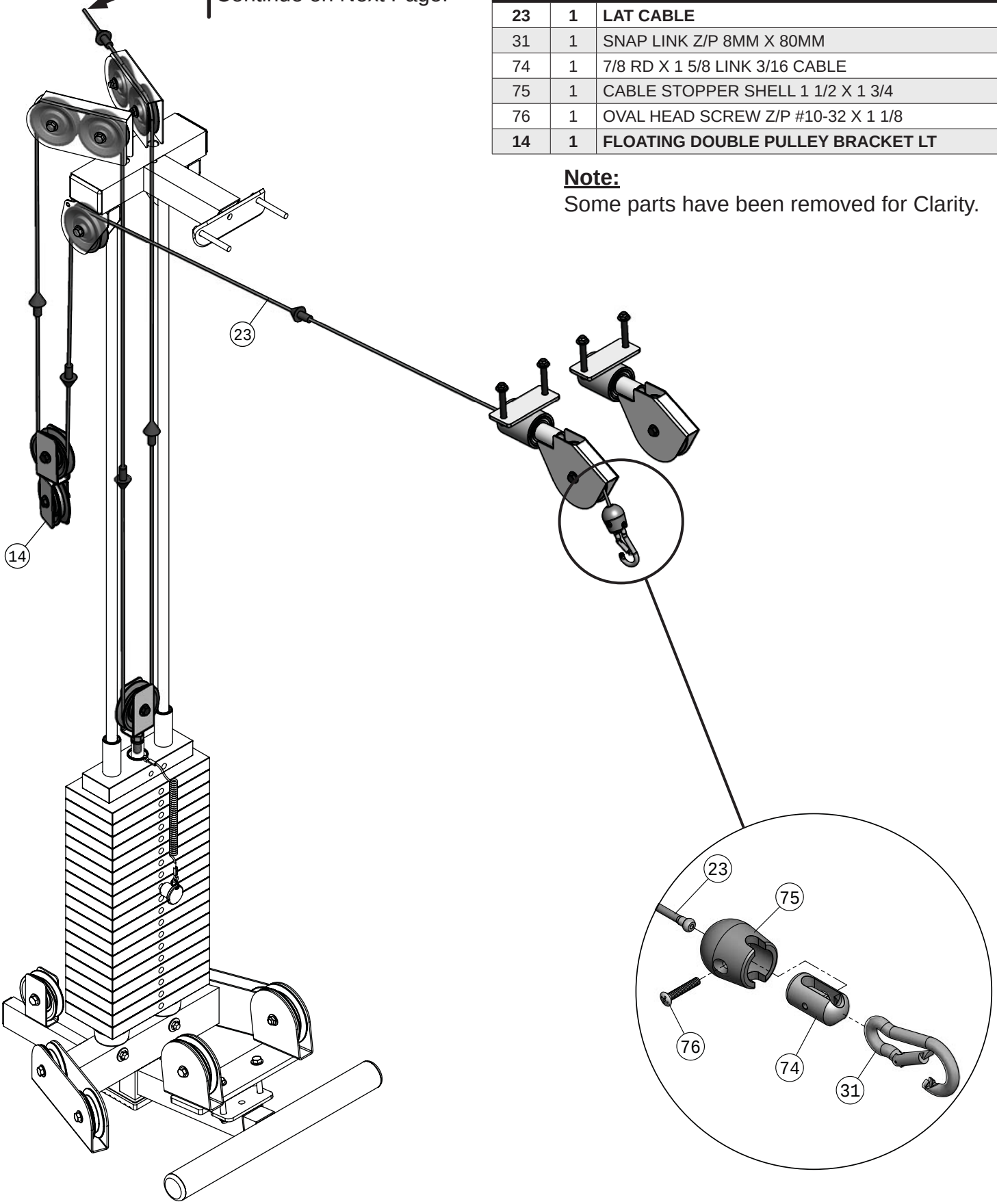

Step 14 Continue Lat Cable Assembly

Step 14 Assembly List		
Item	**Qty.**	**Description**
23	**1**	**LAT CABLE**
31	1	SNAP LINK Z/P 8MM X 80MM
74	1	7/8 RD X 1 5/8 LINK 3/16 CABLE
75	1	CABLE STOPPER SHELL 1 1/2 X 1 3/4
76	1	OVAL HEAD SCREW Z/P #10-32 X 1 1/8
15	**1**	**FLOATING DOUBLE PULLEY BRACKET RT**

Note:
Some parts have been removed for Clarity.

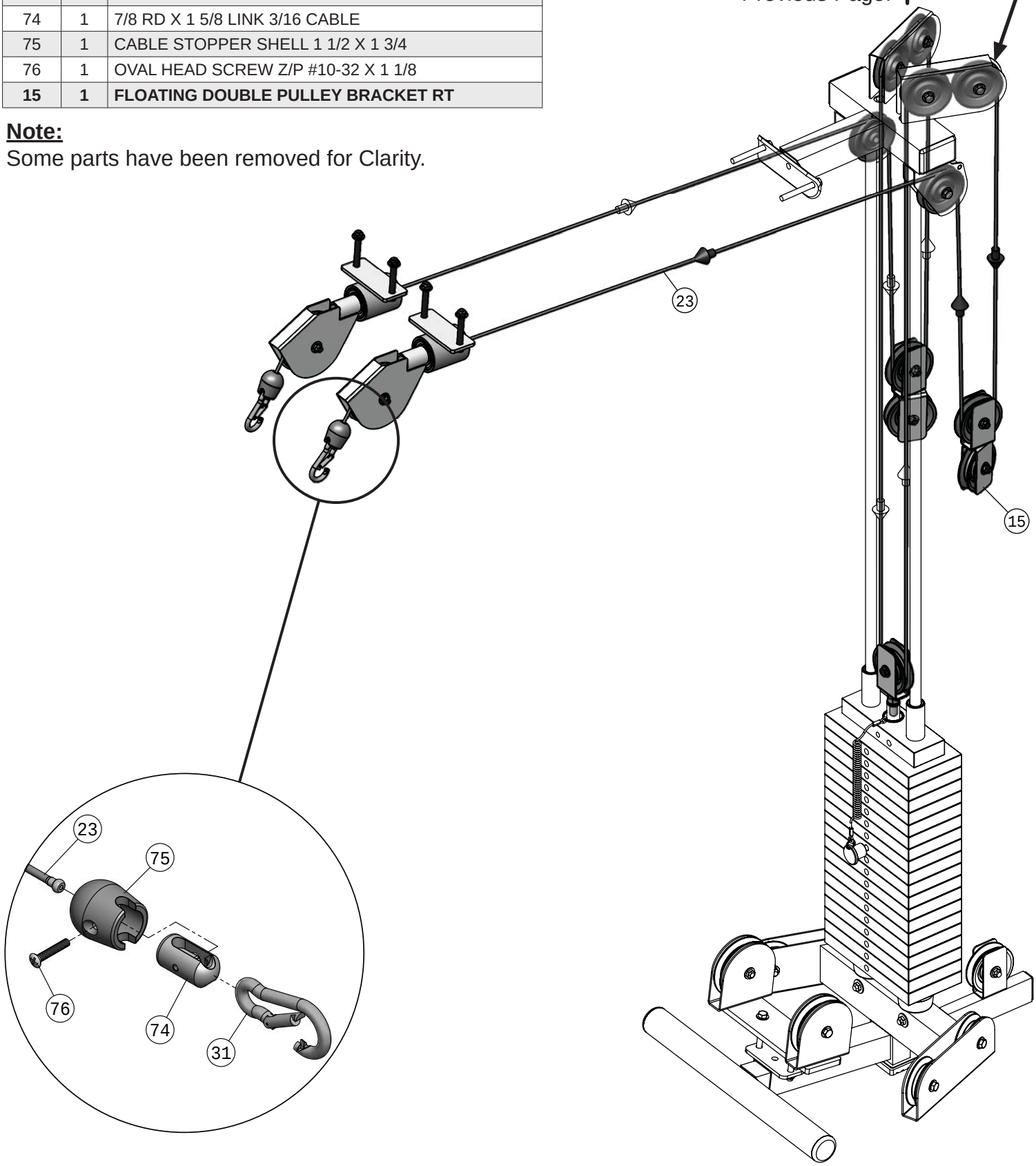

Step 15 Left Side High/Low Cable Assembly

Step 15 Assembly List		
Item	**Qty.**	**Description**
24	**1**	**HIGH/LOW CABLE**
31	1	SNAP LINK Z/P 8MM X 80MM
74	1	7/8 RD X 1 5/8 LINK 3/16 CABLE
75	1	CABLE STOPPER SHELL 1 1/2 X 1 3/4
76	1	OVAL HEAD SCREW Z/P #10-32 X 1 1/8
33	1	SHOULDER BOLT ALLOY 3/8 X 3/4
45	1	NYLON INSERT LOCK NUT Z/P 5/16-18
***13**	**1**	**FLOATING ADJUSTABLE PULLEY BRACKET ASM**

Note:
Some parts have been removed for Clarity.

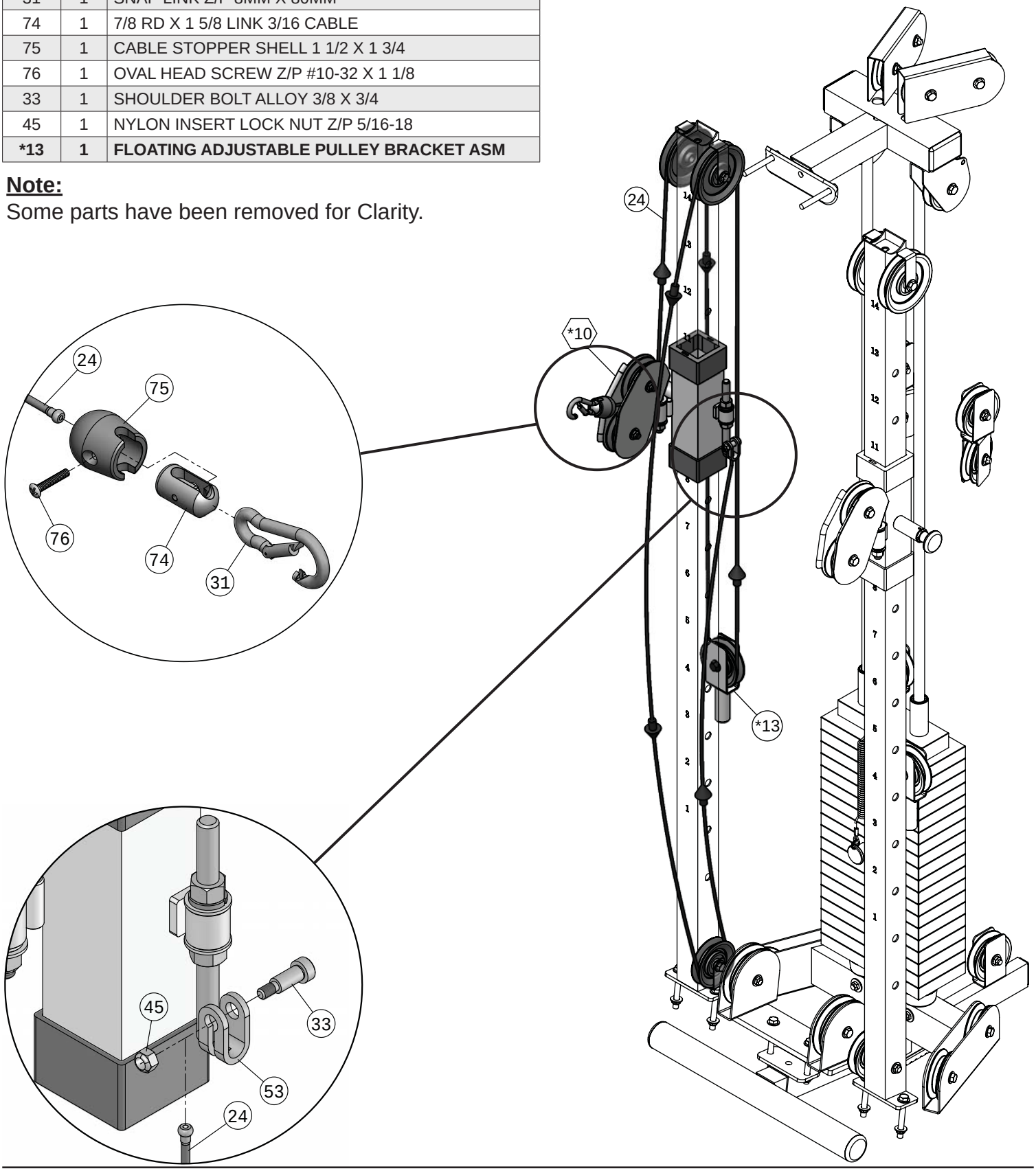

Step 16 Right Side High/Low Cable Assembly

Step 16 Assembly List

Item	Qty.	Description
24	**1**	**HIGH/LOW CABLE**
31	1	SNAP LINK Z/P 8MM X 80MM
74	1	7/8 RD X 1 5/8 LINK 3/16 CABLE
75	1	CABLE STOPPER SHELL 1 1/2 X 1 3/4
76	1	OVAL HEAD SCREW Z/P #10-32 X 1 1/8
33	1	SHOULDER BOLT ALLOY 3/8 X 3/4
45	1	NYLON INSERT LOCK NUT Z/P 5/16-18
***13**	**1**	**FLOATING ADJUSTABLE PULLEY BRACKET ASM**

Note:
Some parts have been removed for Clarity.

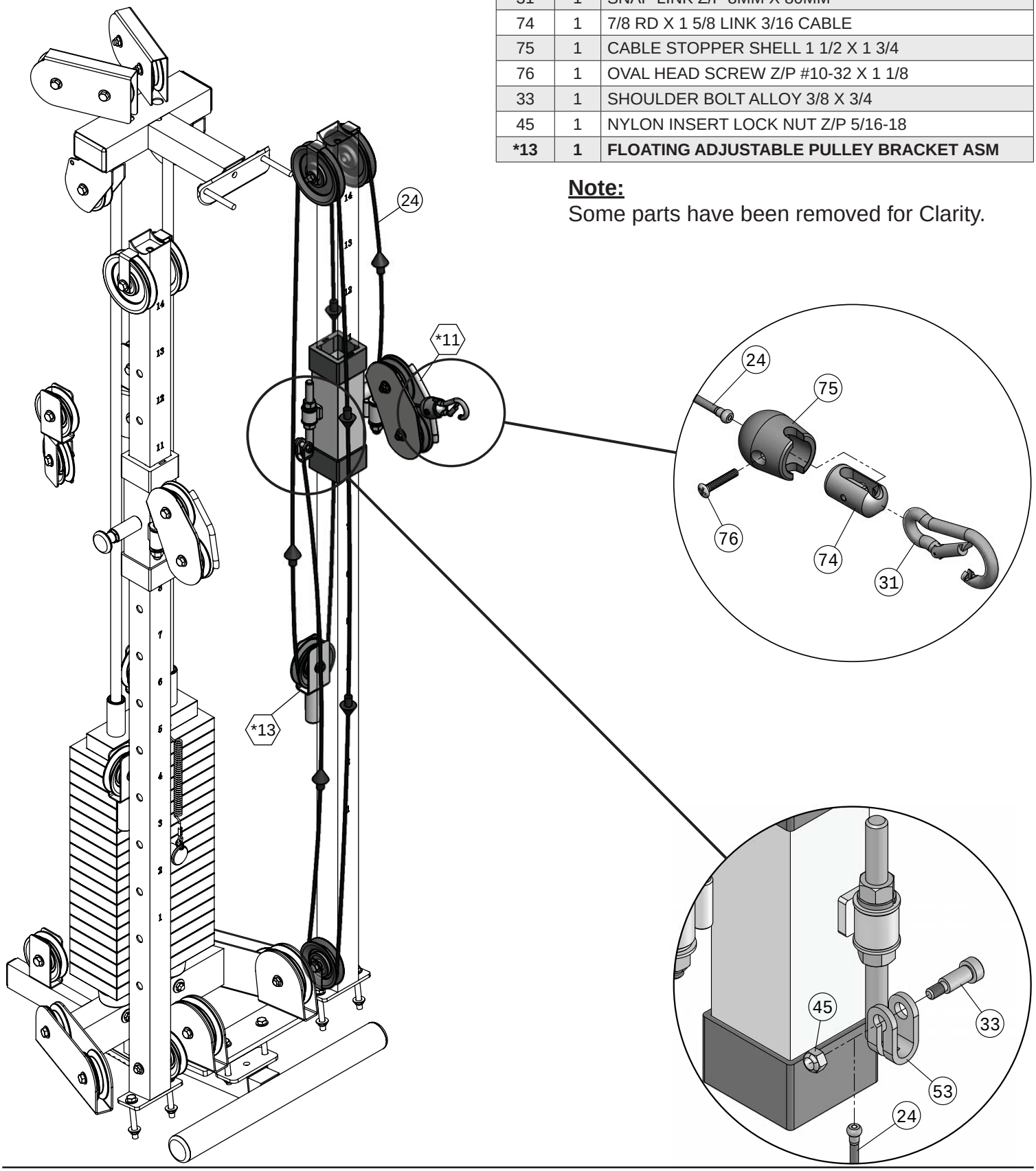

Step 17 Left Side Low/Low Cable Assembly

Step 17 Assembly List

Item	Qty.	Description
25	**1**	**LOW ROW CABLE**
31	1	SNAP LINK Z/P 8MM X 80MM
44	1	SPLIT LOCK WASHER Z/P 1/2"
45	1	NYLON INSERT LOCK NUT Z/P 5/16-18
47	1	FINISHED HEX NUT Z/P 1/2-13
61	1	SPLIT HEX TAP BOLT GR-5 B/O 1/2-13 X 3 1/2
74	1	7/8 RD X 1 5/8 LINK 3/16 CABLE
75	1	CABLE STOPPER SHELL 1 1/2 X 1 3/4
76	1	OVAL HEAD SCREW Z/P #10-32 X 1 1/8

Note:
Some parts have been removed for Clarity.

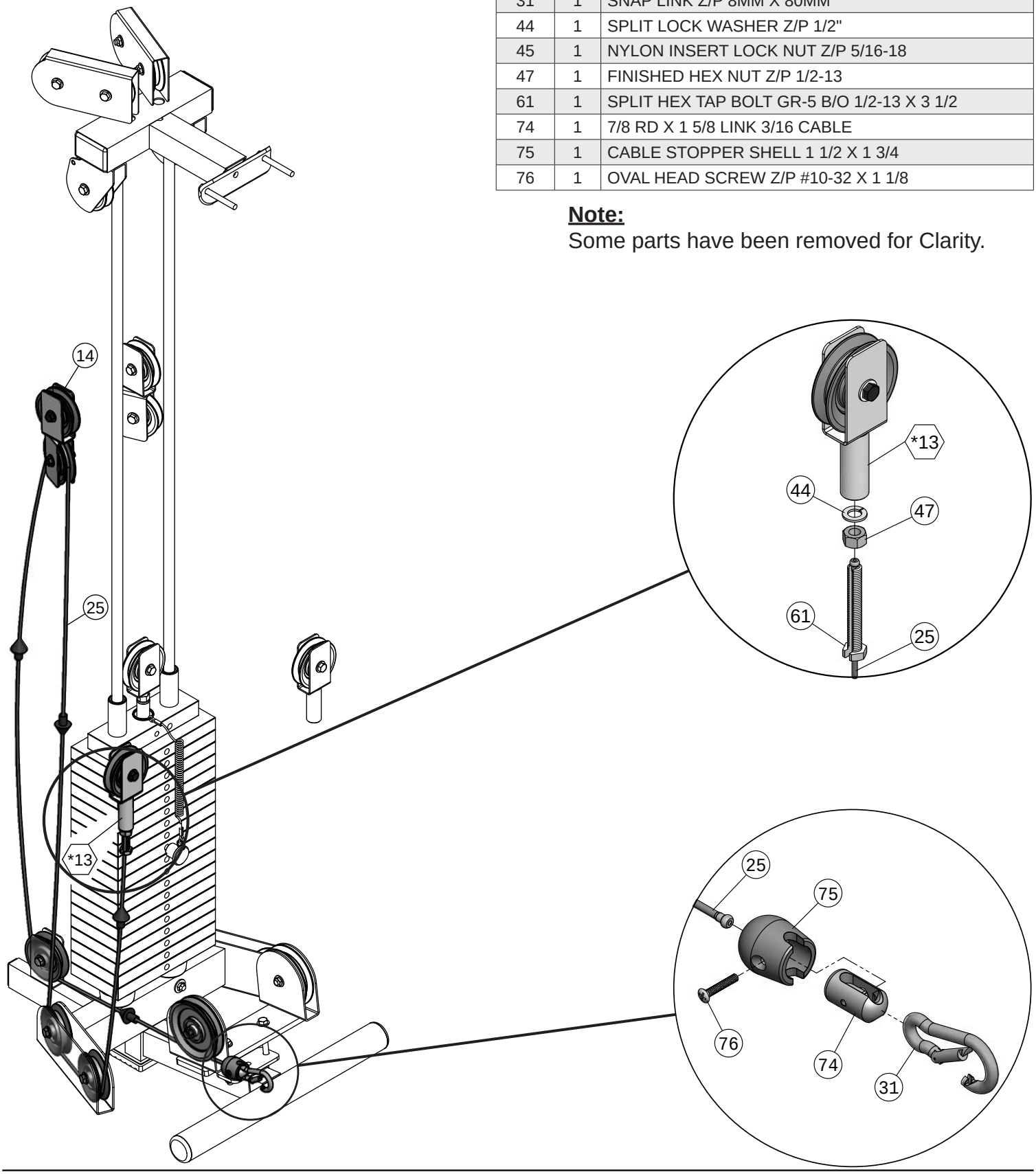

Step 18 Right Side Low/Low Cable Assembly

Step 18 Assembly List		
Item	**Qty.**	**Description**
25	**1**	**LOW ROW CABLE**
31	1	SNAP LINK Z/P 8MM X 80MM
44	1	SPLIT LOCK WASHER Z/P 1/2"
45	1	NYLON INSERT LOCK NUT Z/P 5/16-18
47	1	FINISHED HEX NUT Z/P 1/2-13
61	1	SPLIT HEX TAP BOLT GR-5 B/O 1/2-13 X 3 1/2
74	1	7/8 RD X 1 5/8 LINK 3/16 CABLE
75	1	CABLE STOPPER SHELL 1 1/2 X 1 3/4
76	1	OVAL HEAD SCREW Z/P #10-32 X 1 1/8

Note:
Some parts have been removed for Clarity.

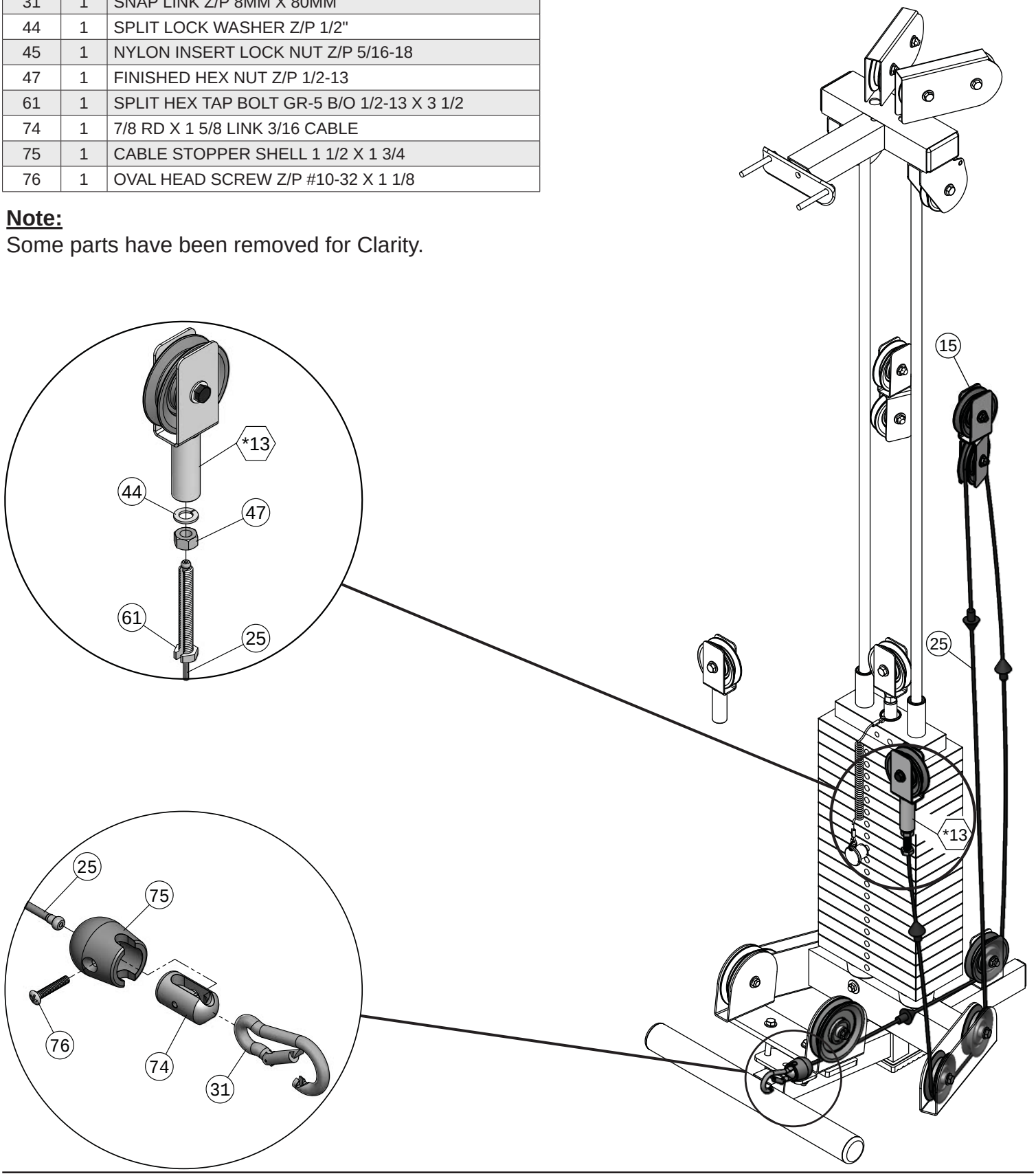

Step 19

Step 19 Assembly List		
Item	**Qty.**	**Description**
40	3	HEX HEAD CAP SCREW GR-5 Z/P 1/4-20 X 3/4
41	3	FLAT WASHER USS Z/P 1/4"
***9**	**1**	**WEIGHT SHIELD ASSEMBLY**

Note:
Some parts have been removed for Clarity.

Note:
It is strongly recommended that two people participate in this assembly step.

Fully Tighten

Wrench tighten all hardware in this step.

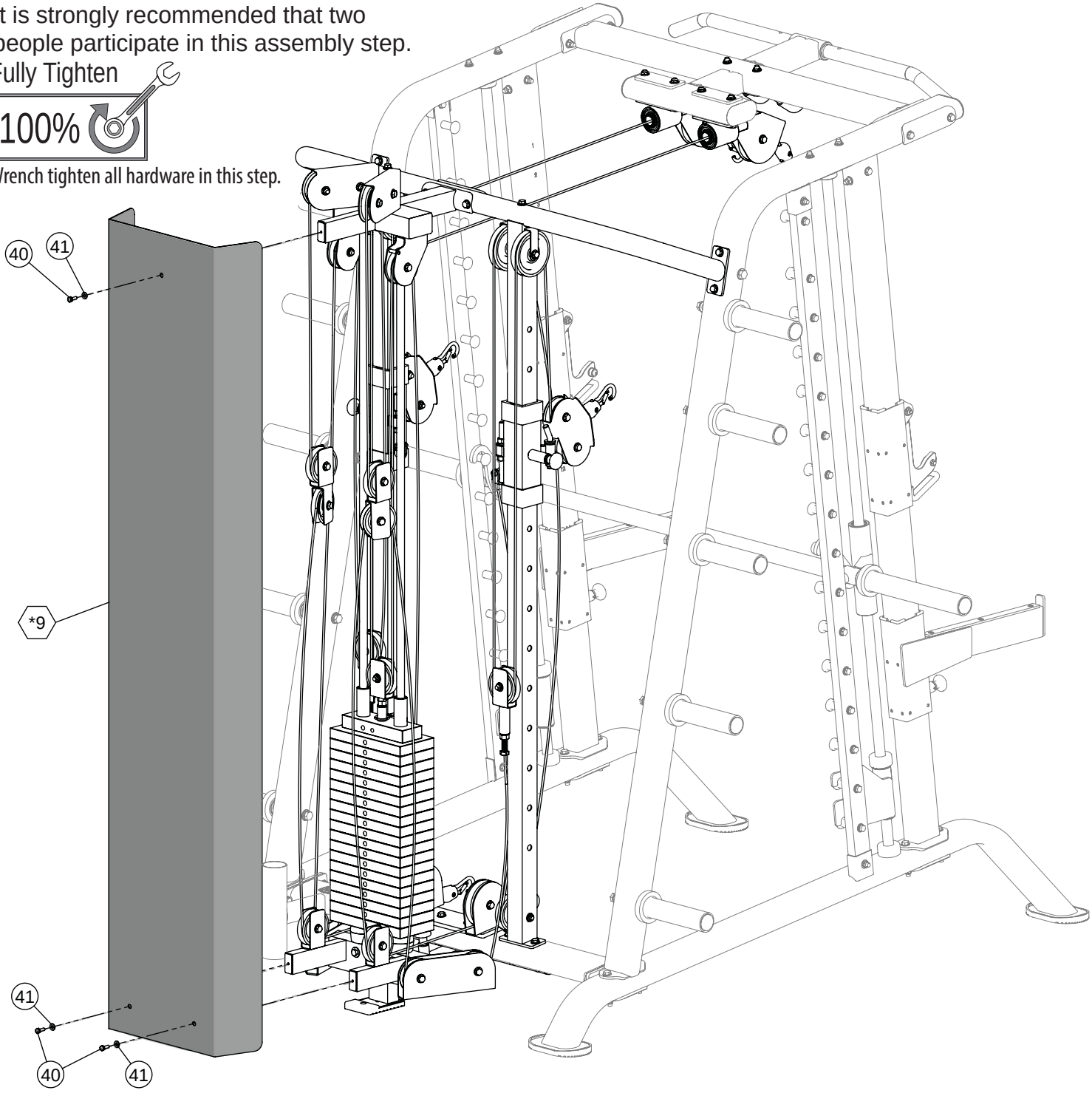

Step 20

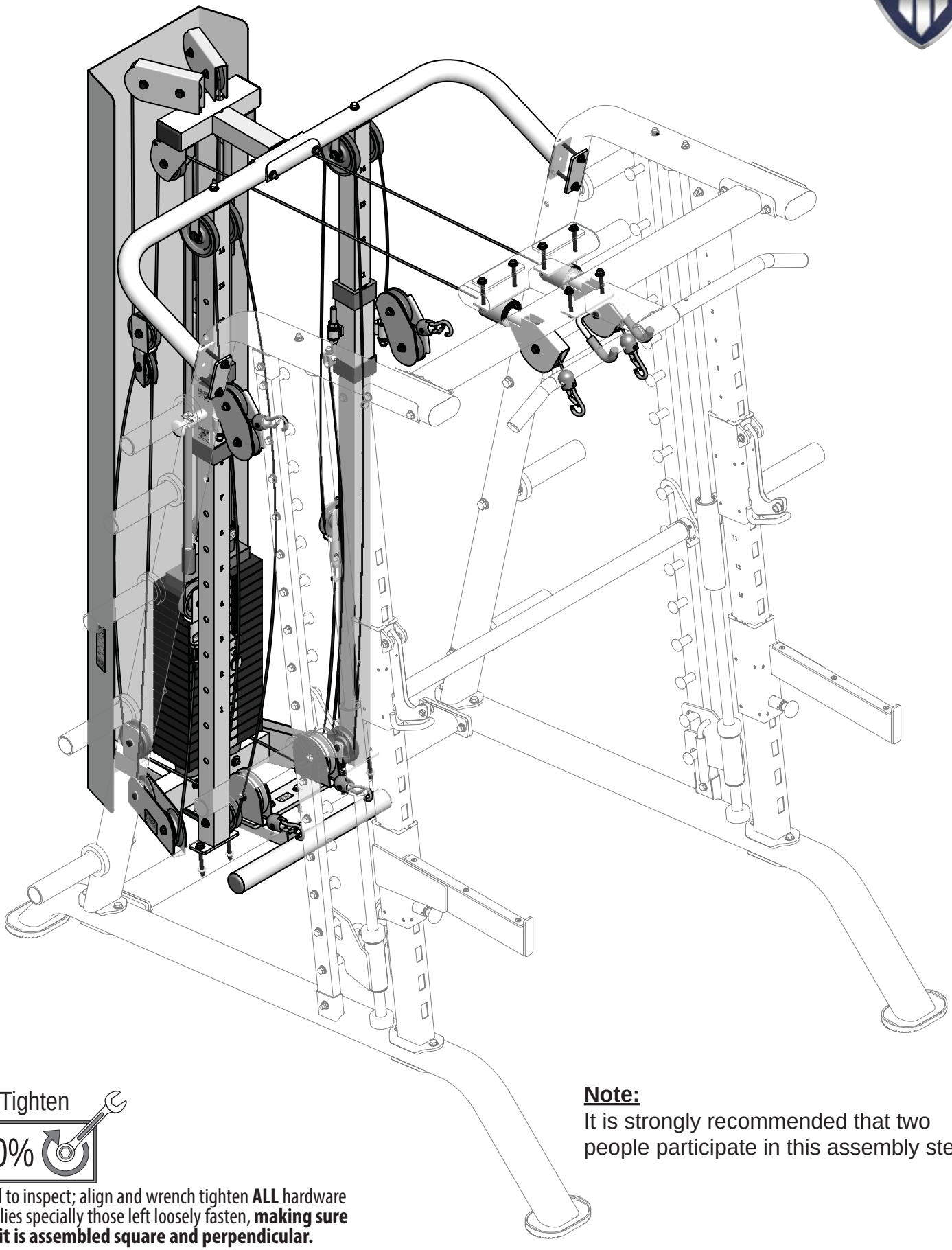

Fully Tighten

100%

Proceed to inspect; align and wrench tighten **ALL** hardware assemblies specially those left loosely fasten, **making sure the unit is assembled square and perpendicular.**

Note:
It is strongly recommended that two people participate in this assembly step.

Parts List

COLOR CHART

*BLACK BOLD = PRE-ASSEMBLED COMPONENTS

BLACK BOLD = SUBASSEMBLY COMPONENTS

BLACK = HARDWARE

CHL-610WS
Parts List

REV0

ITEM	DESCRIPTION	REV.	PART NO.	QTY.	ITEM	DESCRIPTION	REV.	PART NO.	QTY.
1	**LOWER BASE FRAME**	**0**	**UP5201**	**1**	49	COIL CHAIN Z/P 3/16 X 12 LINKS		BNH2522	2
2	**TOP GUIDE ROD RETAINER**	**0**	**UP5209**	**1**	50	HEX KEY 3/16"		BNH2542	1
3	**TOP HIGH/LOW CROSS BRACE**	**0**	**UP5200**	**1**	51	HEX KEY ALLOY 3/32"		BNH0372	1
4	**SELECTOR POST LT**	**0**	**UP5203**	**1**	52	SUPER LUBE TEFLON LUBRICANT 82340		BNH0704	1
5	**SELECTOR POST RT**	**0**	**UP5222**	**1**	**53**	**ADJUSTABLE CABLE BOLT**	**0**	**UP3648**	**2**
6	**TOP SWIVEL PULLEY BRACKET**	**0**	**UP3637**	**2**	**54**	**ADJUSTABLE FOOT SUPPORT**	**0**	**UP5202**	**1**
7	**LAT HOLDER**	**0**	**UP5212**	**1**	**55**	**CARRIAGE DOUBLE PULLEY BRACKET**	**0**	**UP8331**	**2**
8	**REINFORCEMENT PLATE W/PULLEY BRACKETS**	**0**	**UP8325**	**1**	**56**	**TOP SWIVEL PULLEY BRACKET HOUSING**	**0**	**UP5213**	**2**
9	**WEIGHT SHIELD**	**0**	**UP5215**	**1**	57	10 LB STEEL WEIGHT PLATE BLACK 4 9/16 X 9 7/16		BNH1237	19
10	**CARRIAGE LT**	**0**	**UP5204**	**1**	58	BALL BEARING 520-2R5		BNH1712	4
11	**CARRIAGE RT**	**0**	**UP5205**	**1**	59	BRONZE BUSHING 1/2 X 5/8 X 1/2 X 7/8 X 1/8		BNH0528	4
12	**ADJUSTABLE PULLEY BRACKET**	**0**	**UP5211**	**1**	60	FLAT WASHER SAE Z/P 1/2"		BNH2031	6
13	**FLOATING ADJUSTABLE PULLEY BRACKET**	**0**	**UP5206**	**2**	61	SPLIT HEX TAP BOLT GR-5 B/O 1/2-13 X 3 1/2		BNH1131	2
14	**FLOATING DOUBLE PULLEY BRACKET LT**	**0**	**UP5207**	**1**	62	NYLON INSERT LOCK NUT Z/P 1/2-13		BNH2029	2
15	**FLOATING DOUBLE PULLEY BRACKET RT**	**0**	**UP5208**	**1**	63	PLASTIC INSERT CAP 1" RD 10-12 GA		BNH0002	4
16	**GUIDE ROD 3/4 X 73 5/8**	**0**	**UP5210**	**2**	64	PLASTIC INSERT CAP 1 7/8" RD.		BNH0003	2
17	**REIFORCEMENT PLATE 1/4 X 2 X 4 1/2**	**0**	**UP5221**	**2**	65	PLASTIC INSERT CAP 2 X 3		BNH0052	2
18	**LAR BAR DOUBLE LINK**	**0**	**UP8326**	**1**	66	PLASTIC TUBE GUIDE W/LIP-TEETH 2 1/2" SQ		BNH0060	4
19	**LOW ROW BAR 20" DOUBLE LINK**	**0**	**UP8327**	**1**	67	PUSH PULL PIN 1/2 X 2 7/8 LIGHT SPRING		BNH0542	1
20	10 LB TOP PLATE W/22" SLTR BAR 19 BLK WTS ASSY		BNH2020	1	68	PUSH PULL PIN 1/2 X 3 1/2 REGULAR		BNH0520	2
21	BLACK NYLON PULLEY 3/8 X 1 X 3 1/2		BNH2832	25	69	RETAINING SNAP RING EXT. PLAIN 1 1/4"		BNH1718	2
22	NYLON PULLEY 3/8 X 1 X 4 1/2 BLACK		BNH2834	8	70	RUBBER FOOT 3 X 4 1/2		BNH0607	1
23	**LAT CABLE**	**0**	**UP8328**	**1**	71	RUBBER GROMMET 3/4" ID		BNH0401	2
24	**HIGH/LOW CABLE**	**0**	**UP8329**	**2**	72	SOCKET SET SCREW Z/P 10-32 X 1/8		BNH2088	3
25	**LOW ROW CABLE**	**0**	**UP8330**	**2**	73	URETHANE BUMPER 1 3/4		BNH0229	1
26	NYLON ANKLE STRAP		BNH3203	1	74	7/8 RD X 1 5/8 LINK 3/16 CABLE		BNH4232	6
27	CONTOUR ERGO HANDLE LONG STRAP		BNH2738	2	75	CABLE STOPPER SHELL 1 1/2 X 1 3/4		BNH4230	6
28	**CABLE RETAINER BRACKET**	**0**	**UP0014**	**4**	76	OVAL HEAD SCREW Z/P #10-32 X 1 1/8		BNH2793	6
29	**CABLE RETAINER BRACKET (3 1/2 PULLEY)**	**0**	**UP0998**	**2**	77	YELLOW GRIP 1/2 X 4		BNH3059	2
30	RUBBER DONUT 3/4 X 2 1/2		BNH0068	4	78	LABEL-DANGER USE THIS EQUIPMENT ONLY...		BNH2903	1
31	SNAP LINK Z/P 8MM X 80MM		BNH0065	8	79	LABEL WARNING KEEP BODY, HANDS, 1 1/2 X 2 1/4		BNH2908	1
32	HEX HEAD CAP SCREW GR-5 Z/P 3/8-16 X 1 3/4		BNH2040	27	80	LABEL CAUTION CHECK PULL-PIN IS FULLY... 1 1/2 X 1 3/8		BNH2912	3
33	SHOULDER BOLT ALLOY 3/8 X 3/4		BNH0718	2	81	LABEL IMPORTANT FOR SMOOTH PERFORMANCE...		BNH2916	3
34	HEX HEAD CAP SCREW GR-5 Z/P 3/8-16 X 2 1/2		BNH2044	2	82	DECAL-WARNING DO NOT USE FOR CHINNING...		BNH2923	1
35	HEX HEAD CAP SCREW GR-5 Z/P 3/8-16 X 2 3/4		BNH2045	2	83	LABEL-IMPORTANT ADJUST CABLE TENSION HERE		BNH2924	4
36	HEX HEAD CAP SCREW GR-5 Z/P 3/8-16 X 3		BNH2046	16	84	LABEL-IMPORTANT FOR SMOOTH PERFORMANCE...		BNH2925	1
37	HEX HEAD CAP SCREW GR-5 Z/P 3/8-16 X 3 5/32		BNH4312	2	85	LABEL-WARNING KEEP BODY, HANDS...		BNH2926	1
38	HEX HEAD CAP SCREW GR-5 Z/P 3/8-16 X 3 1/2		BNH2107	2	86	LABEL-WARNING_SERIOUS INJURY OR DEATH		BNH3134	1
39	HEX HEAD CAP SCREW GR-5 Z/P 3/8-16 X 4 3/4		BNH2063	2	87	LABEL-SCHEDULE REPLACEMENT PARTS...		BNH3135	1
40	HEX HEAD CAP SCREW GR-5 Z/P 1/4-20 X 3/4		BNH2106	3	88	LABEL-WARRANTY LIGHT COMMERCIAL		BNH3136	1
41	FLAT WASHER USS Z/P 1/4"		BNH2105	3	89	LABEL-INSPECTIONS RECOMMENDED INSPECTION…		BNH3137	1
42	FLAT WASHER SAE Z/P 3/8"		BNH2030	108	90	FACILITY SIGN BE ALERT! THE FITNESS EQUIPMENT...		BNH3138	1
43	SPLIT LOCK WASHER Z/P 3/8"		BNH0658	2	91	LABEL-DANGER CHECK RETAINING NUT... 1.5 X 1		BNH3146	3
44	SPLIT LOCK WASHER Z/P 1/2"		BNH0572	5	92	LABEL_TFI SERIAL NO. 2.5 X 1.5		BNH3147	1
45	NYLON INSERT LOCK NUT Z/P 5/16-18		BNH2056	2	93	DECAL NUMBERS 10-200 LBS/KGS 7/8 X 3 YELLOW & BLK		BNH4069	1
46	NYLON INSERT THIN PATTERN LOCK NUT Z/P 3/8-16		BNH2026	51	94	NYLON BUSHING 25/32 ID X 1 1/16 OD X 29/32		BNH0532	42
47	FINISHED HEX NUT Z/P 1/2-13		BNH0206	7	95	ROLL PIN B/O 3/8 X 2		BNH0661	1
48	**SELECTOR PIN W/COIL 3/8 X 4 GOLD KNOB**	**0**	**UP3035**	**1**					

Parts List

Pre-Assembled Components

ITEM	DESCRIPTION	REV.	PART NO.	QTY.	ITEM	DESCRIPTION	REV.	PART NO.	QTY.
*1	LOWER BASE FRAME ASSEMBLY	0	UP5201X1	1	*18	LAR BAR DOUBLE LINK ASM	0	UP8326X1	1
*2	TOP GUIDE ROD RETAINER ASSEMBLY	0	UP5209X1	1	*19	LOW ROW BAR 20" DOUBLE LINK ASM	0	UP8327X1	1
*6	TOP SWIVEL PULLEY BRACKET ASSEMBLY	0	UP3637X1	2	*20	10 LB TOP PLATE W/22" SLTR BAR 19 BLK WTS ASSY		BNH2020X1	1
*7	LAT HOLDER ASSEMBLY	0	UP5212X1	1	*23	LAT CABLE ASSEMBLY	0	UP8328X1	1
*8	REINFORCEMENT PLATE W/PULLEY BKTS ASM	0	UP8325X1	1	*24	HIGH/LOW CABLE ASSEMBLY	0	UP8329X1	2
*9	WEIGHT SHIELD ASSEMBLY	0	UP5215X1	1	*25	LOW ROW CABLE ASSEMBLY	0	UP8330X1	2
*10	CARRIAGE LT ASSEMBLY	0	UP5204X1	1	*54	ADJUSTABLE FOOT SUPPORT	0	UP5202X1	1
*11	CARRIAGE RT ASSEMBLY	0	UP5205X1	1	*57	10 LB STEEL WEIGHT PLATE BLK 4 9/16 X 9 7/16 ASM		BNH1650	19
*13	FLOATING ADJUSTABLE PULLEY BRACKET ASM	0	UP5206X1	2					

Pre-Assembled Components

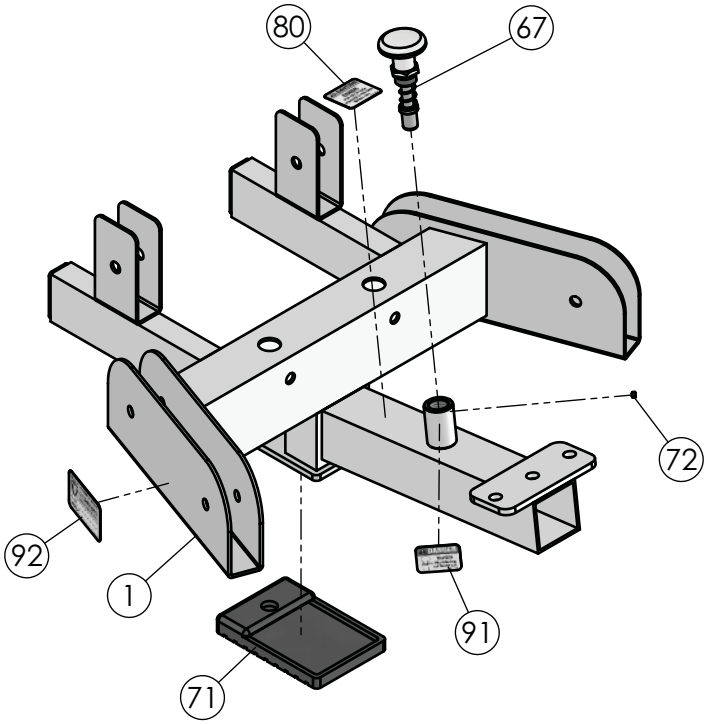

*1

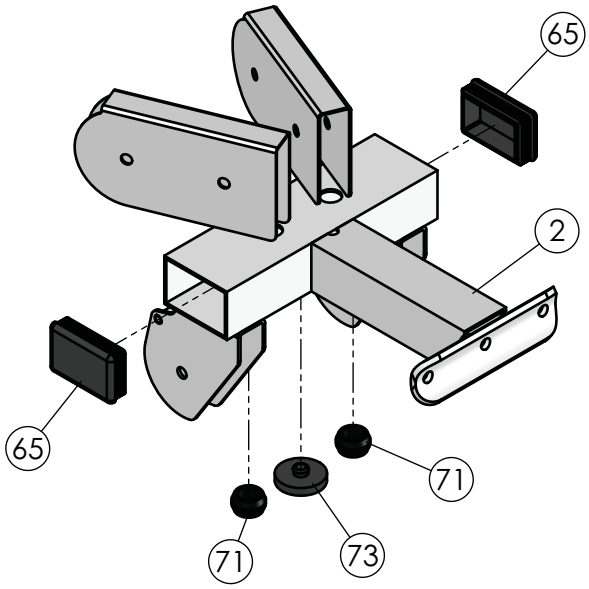

*2

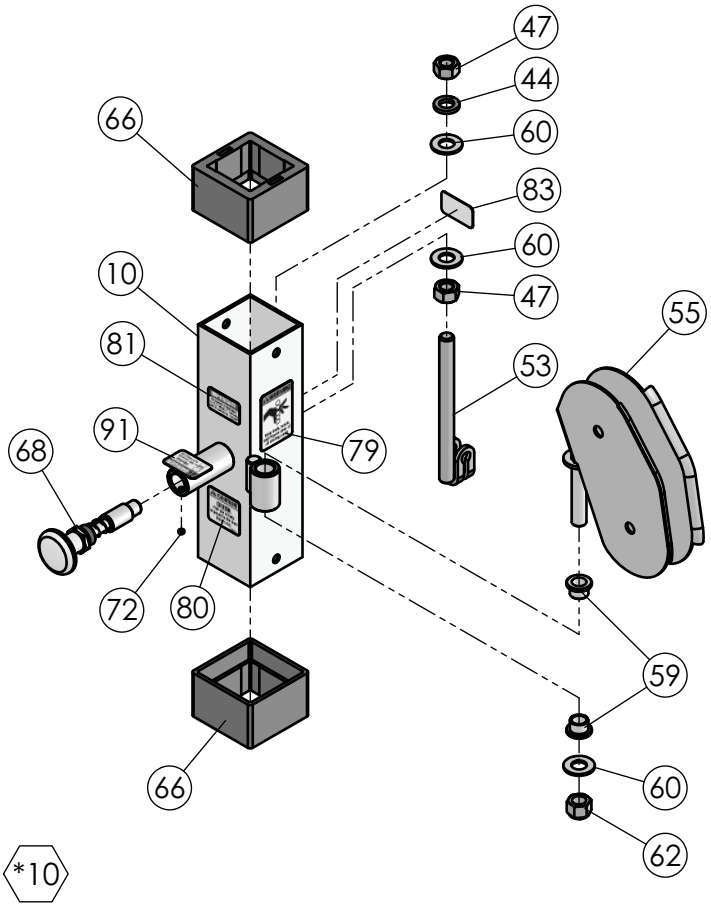

*10

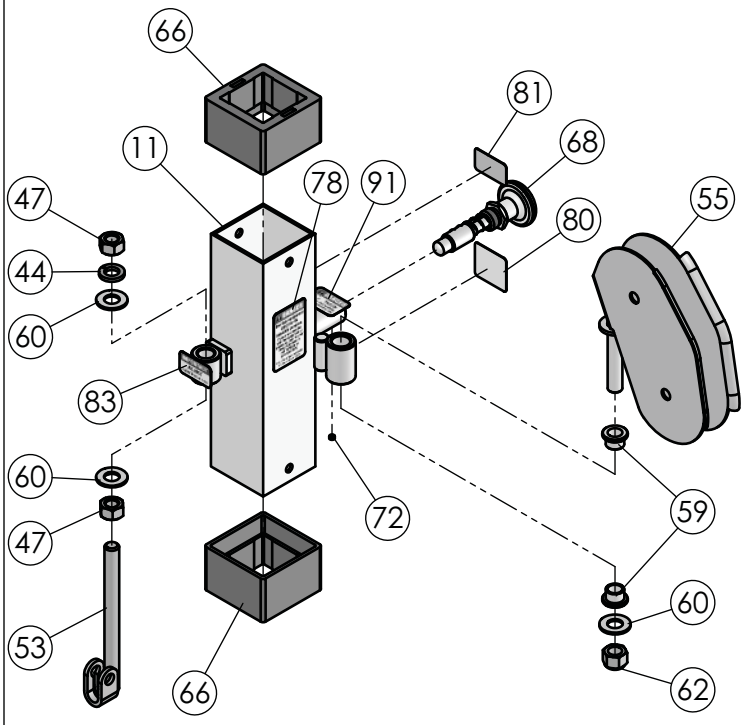

*11

Pre-Assembled Components

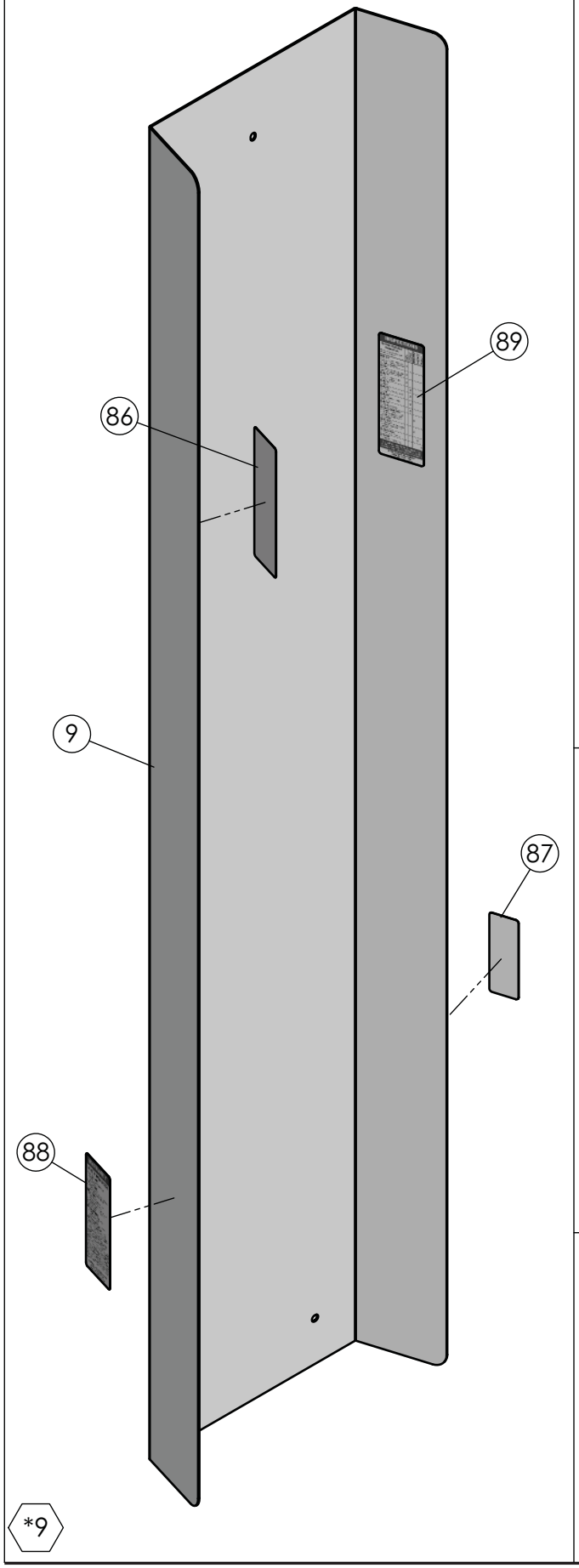

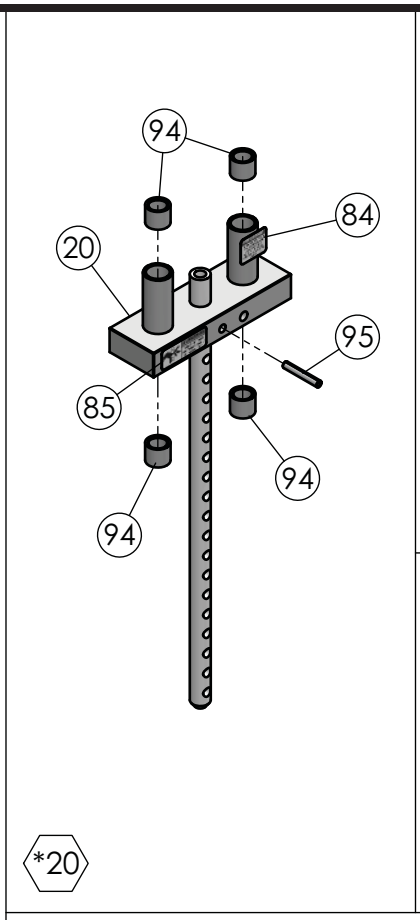

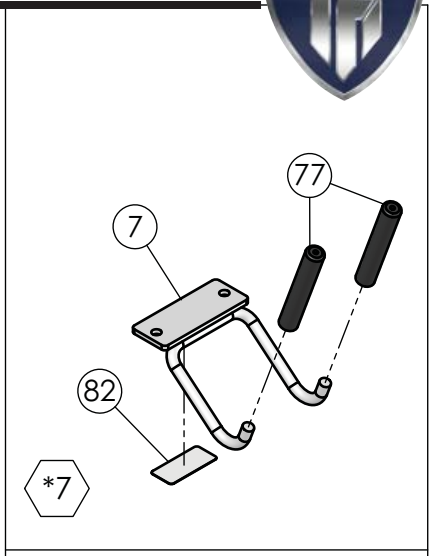

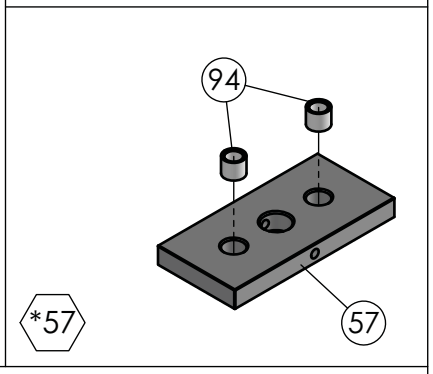

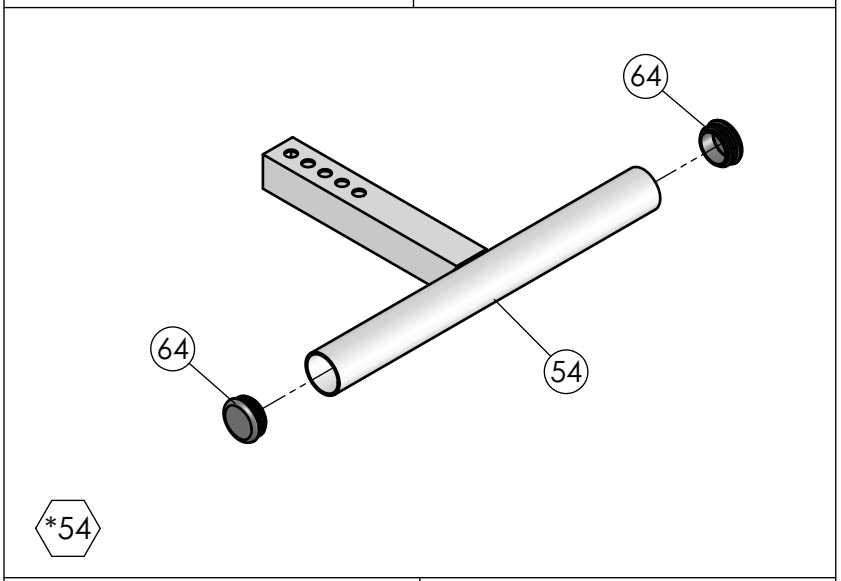

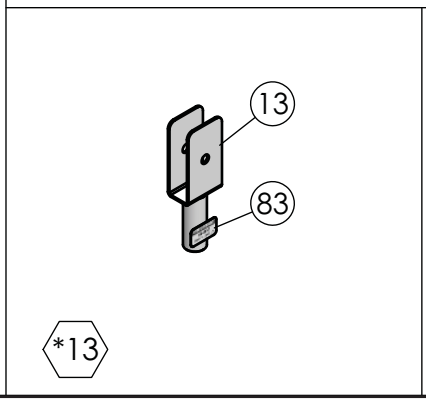

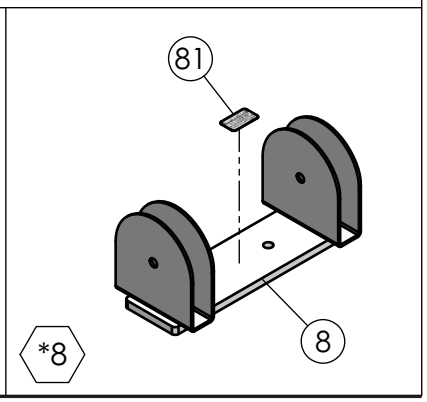

Pre-Assembled Components

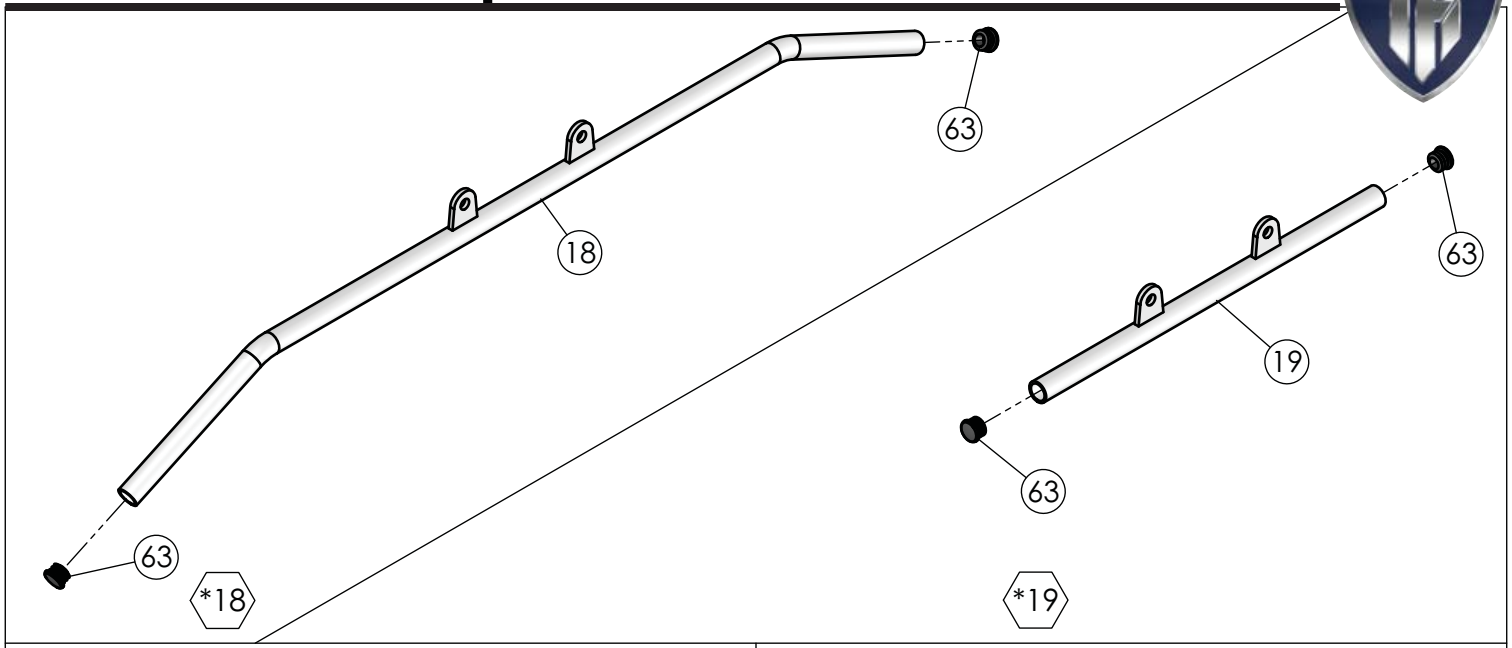

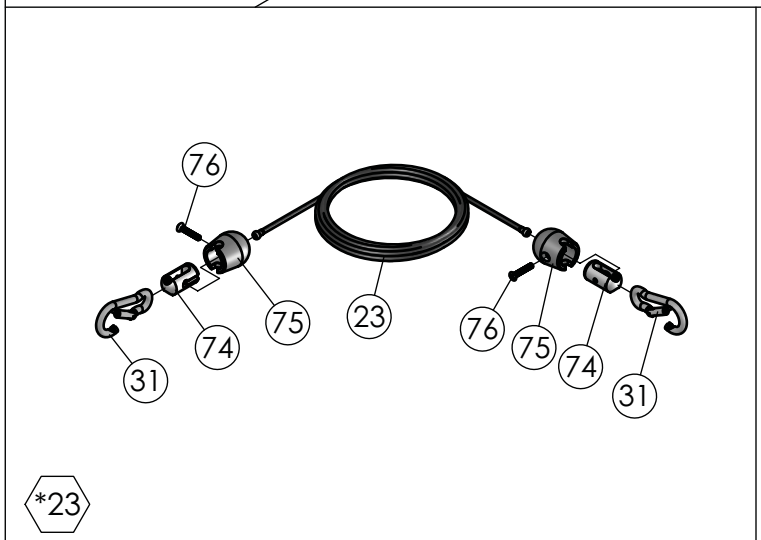

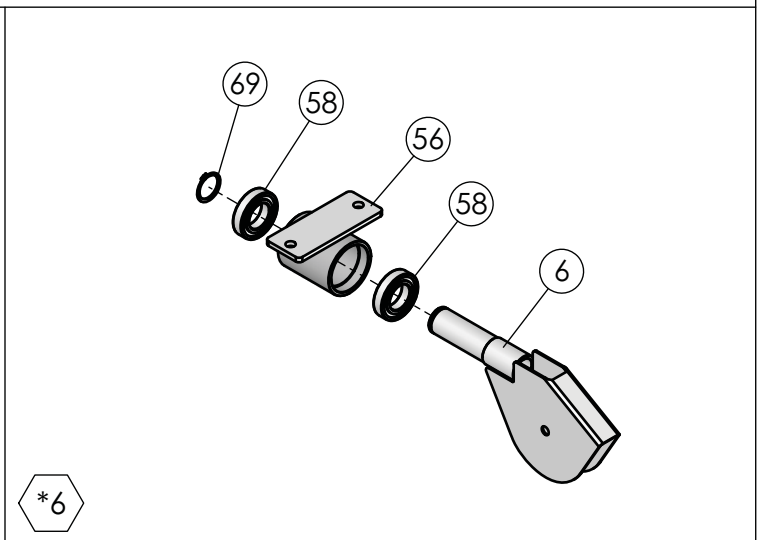

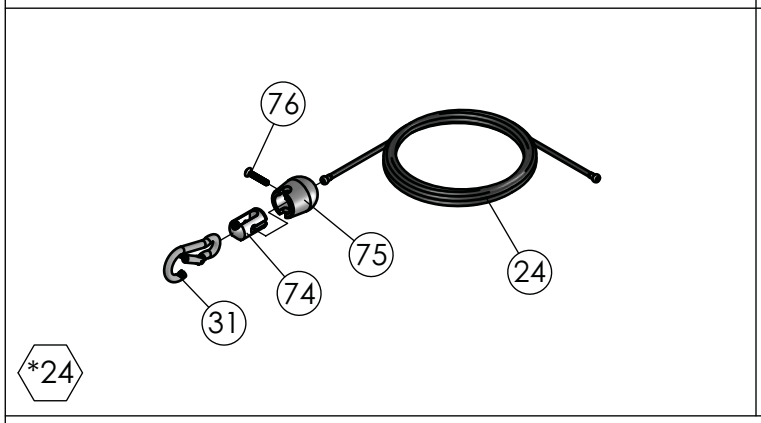

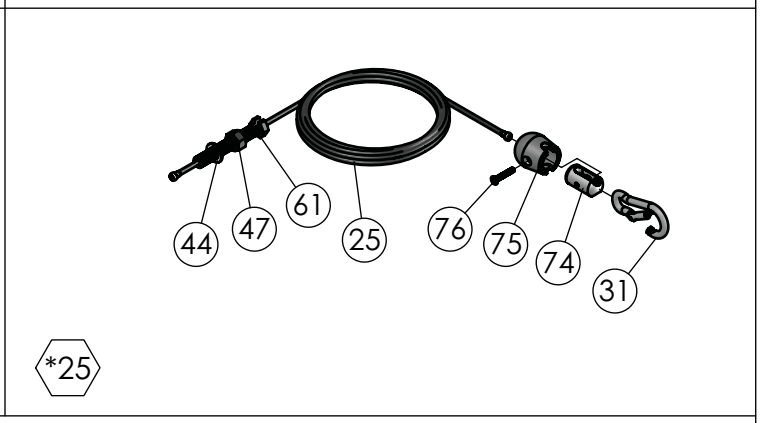

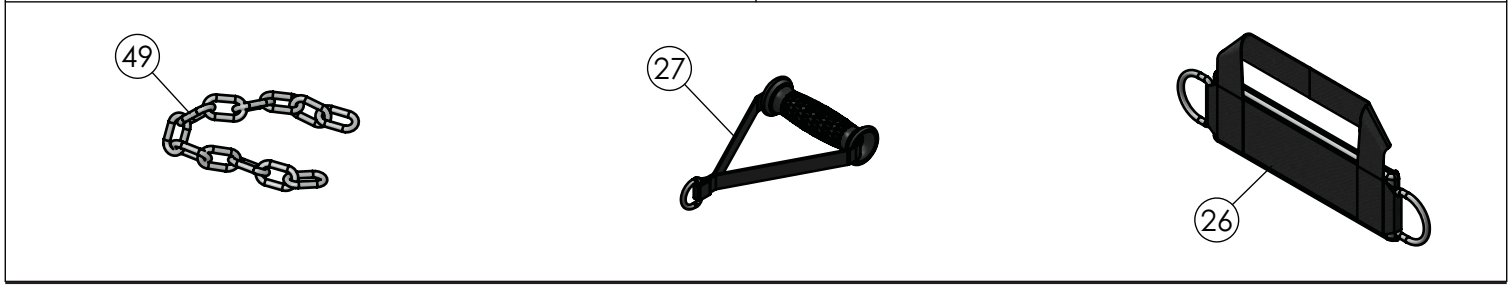

LIGHT COMMERCIAL WARRANTY

This warranty applies only in the United States to the products manufactured or distributed by TuffStuff Fitness International (TFI) under the TuffStuff brand name. TFI warrants to the original purchaser that TuffStuff equipment will be free from defects in material and workmanship. All warranty periods begin to run from the date of purchase to the original purchaser. The warranty and remedies set forth herein are conditioned upon proper storage, installation, use and maintenance and conformance with any recommendations of TFI. This warranty does not cover products not manufactured by TFI or products which are altered without the express written consent of TFI.

LIGHT COMMERCIAL WARRANTY:

TEN (10) Years: Structural main frames, welds, cams and weight plates.

FIVE (5) Years: Pivot bearings, pulleys, bushings, guide rods and gas shocks.

ONE (1) Year: Belts, linear bearings and pull-pin components.

All other parts not mentioned elsewhere in the warranty will expire one (1) year from the date of purchase to the original purchaser.

SIX (6) Months: Upholstery, cables, finish and rubber grips.

Light Commercial Use:
Light Commercial Warranty applies to facilities like hotels, apartment complexes, personal training studios, fire & police stations, etc. where the equipment would be used by no more than 30 people per day.

HOME LIFETIME WARRANTY:

LIFETIME of the equipment while owned by the original purchaser (applies only to defects from manufacturer only).

This warranty does not cover:

1. TuffStuff products sold for and used in a commercial or institutional environment.
2. Any damage, failure or loss caused by accident, misuse, neglect, abuse, improper assembly, improper maintenance, or failure to follow instructions or warnings in the owner's manual and warning labels posted on the machines.
3. Use of the product in a manner for which it was not designed.
4. Original product that is altered, or the use of replacement parts and components of another manufacturer other than TuffStuff.

The obligation of TFI under this warranty is limited to repairing or replacing warranted defective parts as TFI may elect, at TFI's facility in Chino, California, without charge to the purchaser. Purchaser is responsible for installation of repaired or replaced parts, and all transportation and insurance costs on returned or replaced equipment to and from TFI's facility in Chino.

THE FOREGOING SHALL CONSTITUTE THE SOLE REMEDY OF THE PURCHASER AND THE SOLE LIABILITY OF TFI WITH REGARD TO WARRANTY. NO IMPLIED STATUTORY WARRANTY OR IMPLIED STATUTORY WARRANTY OF MERCHANTABILITY OR FITNESS FOR A PARTICULAR PURPOSE SHALL APPLY. IN NO EVENT, WHETHER AS A RESULT OF BREACH OF CONTRACT, WARRANTY, NEGLIGENCE OR OTHERWISE, SHALL TFI BE LIABLE FOR SPECIAL, INCIDENTAL OR CONSEQUENTIAL DAMAGES INCLUDING, BUT NOT LIMITED TO, LOSS OF PROFITS OR REVENUE, LOSS OF USE OF EQUIPMENT, COST OF CAPITAL, COST OF SUBSTITUTION EQUIPMENT, DOWNTIME COST, OR CLAIMS OF CUSTOMERS OR PURCHASER FROM SUCH DAMAGE.

This written warranty is the final, complete and exclusive agreement of the parties with respect to the quality or performance of the equipment and no action for breach of this written warranty or any implied warranty shall be commenced more than one (1) year after the accrual of the cause of action. No modification of this warranty or waiver of its terms shall be binding on either party unless approved in writing by an authorized representative of the party. Contact TuffStuff Fitness International at 13971 Norton Avenue, Chino, CA 91710, before returning any defective equipment.

This warranty gives you specific legal rights and you may also have other rights, which may vary from state to state.

SERIAL # _____

Write your Serial number here for future reference

_____

Purchase Date

TuffStuff Fitness International, Inc.
13971 Norton Avenue, Chino, CA 91710, USA Phone: 909-629-1600 Fax: 909-629-4967
www.tuffstuffitness.com service@tuffstuff.net or service1@tuffstuff.net