Maintenance & Assembly Instructions

DANGER

DO NOT
pull or perform any exercises to the sides of the machine.

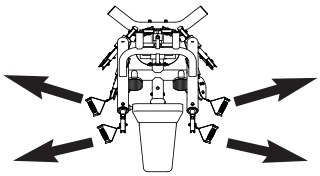

Excessive pulling or force can cause the machine to tip over, and may results in serious injuries or death.

BNH3112

IMPORTANT: KEEP THIS MANUAL FOR FUTURE REFERENCE

NOTICE

It is the Purchaser's/Owner's obligation:

1. To disclose and post all Rules & Regulations, Danger, Warning and Caution labels affixed on the machine to their customers/users.
2. Equipment to be installed by TFI Authorized Dealer or a service company approved by TFI.
3. Provide trained personnel, supervision and correct usage of the equipment.
4. Provide scheduled inspection, maintenance & repairs and must be performed by TFI Authorized Dealer or a service company approved by TFI.
5. Must use only genuine TFI replacement parts.
6. **WARNING** Machine must be anchored to a solid and level surface.

SPT-6X

SIX-PAK TRAINER

SPT-6X_Rev4
Revision Date: 12-4-2019

Table of Contents

Important Safety Instructions....Page 3
Registration, Service & Assembly....Page 4
Assembly Steps....Pages 5 - 20
Lat Cable Routing....Pages 11 - 12
Lat Cable Mapping Diagram....Page 13
Low Row Cable Routing....Pages 14 - 15
SPT-6X Exploded View....Pages 21 - 22
SPT-6X Parts List....Page 23
Inspection / Maintenance....Page 24
Cable Inspection....Page 25
DANGER, WARNING, & CAUTION Labels Information....Pages 26 - 27
SPT-6X Label Placement....Pages 28 - 29

TuffStuff Fitness Equipment Inc. continually engages in research related to product improvements. Please take the time to carefully read through this manual thoroughly. Instructions contained in this manual are not intended to cover all details or variations possible with this equipment, or to cover every contingency that may be met in conjunction with assembly, installation, operation, maintenance or troubleshooting of the equipment. Eventhough we have prepared this manual with extreme care, neither the manufacturer nor the author can accept responsibility for any errors in, or omission from, the information given. Should additional information be required, or should situations arise that are not covered by this manual, the matter should be directed to Customer Service at TuffStuff Fitness Equipment Inc. in Chino, California.

Overhead Specifications

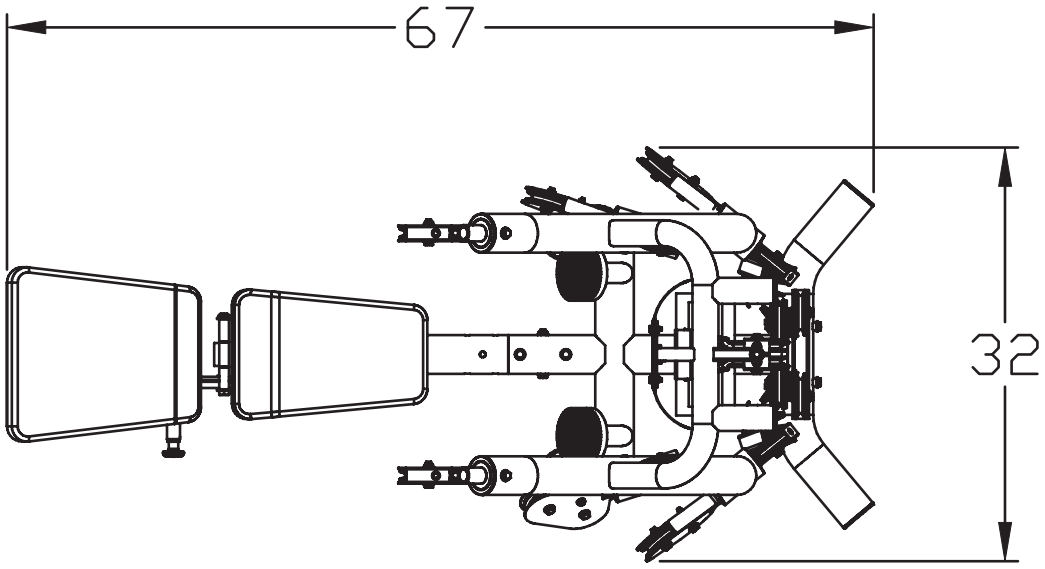

L 67" x W 32" x H 80"
TOTAL UNIT WEIGHT: 500 LBS

Important Safety Instructions

It is the responsibility of the facility owner and/or owner of the equipment to review the Owner's Manual with their facility personnel and understand all Danger, Warning and Caution labels affixed on the machine. It is the responsibility of the floor personnel to instruct users on proper operation of the equipment and review all danger, warning and caution labels.

⚠ WARNING SERIOUS INJURY OR DEATH CAN OCCUR IF THESE SAFETY PRECAUTIONS ARE NOT OBSERVED:

1. Obtain a medical exam before beginning any exercise program.
2. Read and understand Owner's Manual and all **Danger, Warning and Caution** labels before using this equipment. If you still need help, seek assistance from floor personnel.
3. **Inspect the equipment** before each use for wear and tear, loose fittings, worn or frayed cables and frame welds. DO NOT USE if it appears to be inoperable or damaged.
4. Stop exercising if you feel faint or dizzy. Consult a physician if you are experiencing pain.
5. **Use this equipment only for the intended use.**
6. Keep body, clothing and hair clear from all moving parts. Do not attempt to free any jammed parts by yourself.
7. Always warm-up before and cool-down after weight training. Warm-up for 10-15 minutes with stretching and cardiovascular exercises. Cool-down should include light stretching exercises for 5-15 minutes.
8. Never hold your breath – will limit the flow of oxygen to your brain and may cause dizziness. The most often used breathing pattern is inhaling during least resistance and exhaling during maximum resistance.
9. Do not use accessories or accessory attachments that are not recommended by TFI.
10. Make sure selector pin is completely inserted. Use only the selector pin provided by the manufacturer.
11. Never pin the weights in an elevated position. Do not use the machine if found in this condition.

Facility Safety Guidelines and Practices

1. Read and understand the Owner's Manual before assembling, servicing or using the equipment.
2. Equipment to be installed by TFI Authorized Dealer or Professional Service Company approved by TFI.
3. Make sure each machine is set up and operated on a solid level surface. Do not install equipment on an uneven surface.
4. **Anchoring of equipment must be completed** at time of installation and inspected prior to use. Failure to anchor the machine to the floor could cause the machine to tip or fall over due to incorrect usage and misuse, and could result in serious injury or death.
5. Provide an adequate safety perimeter between the machine, walls and other equipment to ensure that the facility has proper clearance for usage and training.
6. Post and disclose all safety, rules and regulations on a bulletin board easily accessible to users.
7. Perform regular maintenance (see Inspection Label). Pay special attention to areas most susceptible to wear and tear, including but not limited to cables, pulleys and rubber grips.
8. **Do not** lean against or pull on the framework, weight stack or any component at all times.
9. **Children must not** be allowed near the equipment. Teenager must be supervised.
10. Replace immediately all parts at first sign of wear or damage. If unable to replace worn or damaged components/parts, remove machine from service until the repair is made.
11. Use only genuine TuffStuff replacement parts. Failure to do so will void warranty and could result in serious injury or death to the users.
12. **Do not remove** any decals affixed to the machine. Replace if damaged.
13. **Do not alter or modify** the original manufacturer's weight stack with any add-on incremental weights, weight plates or dumbbells except those with standard factory installed option.
14. Maintain a service contract with a TFI Authorized Dealer or a Professional Service Company approved by TFI. Keep a service log of all maintenance and repair activities. NOTICE: It is the sole responsibility of the owner or facility operator to ensure that regular maintenance is performed.

⚠ DANGER

DANGER: indicates an imminently hazardous situation which, if not avoided, will result in death or serious injury.

⚠ WARNING

WARNING: indicates a potentially hazardous situation which, if not avoided, will result in death or serious injury.

⚠ CAUTION

CAUTION: indicates a hazardous situation which, if not avoided, could result in minor or moderate injury.

Registration, Service & Assembly

Thank you for purchasing the SPT-6X Six-Pak Trainer.
This machine is part of the TuffStuff Fitness line of quality strength training equipment.
To maximize your use of the equipment, please study the Owner's Manual thoroughly.

Registration

To avoid unnecessary delays on warranty parts and to insure that a permanent record of your purchase is on file with our company, be sure to register online at:

http://www.tuffstuffitness.com/productregistration.jsp
within 10 days of purchase.

Obtaining Service

Please use this Owner's Manual as your guide to all parts included in your shipment. When ordering parts, you must specify the part number and description from this manual. **Use only genuine TuffStuff Fitness replacement parts when servicing the equipment.** Failure to do so will void warranty and could result in serious injury or death.

For information about product operation or service:

Phone:	909-629-1600 Toll Free 888-884-8275
Fax:	909-629-4967
E-mail:	service@tuffstuff.net or service1@tuffstuff.net
Hours:	M–F 8:00 – 4:30 PST
Or write to:	TuffStuff Fitness Equipment Inc. Customer Service 13971 Norton Avenue, Chino, CA 91710

Retain this Owner's Manual for future reference when ordering service or parts. To assist you better, please be prepared to provide the following information:

1. Model Number **2. Place of Purchase**
3. Serial Number **4. Part # and Description**

Required Tools

The basic tools that you will need to assemble the SPT-6X but are not limited to:

- 1/2", 9/16", 3/4", 7/8" Combination Wrenches
- Ratchet Wrench with 1/2", 9/16", 3/4" sockets
- Crescent Adjustable Wrench
- External retaining ring pliers
- Super Lube® spray lubricant and grease
- Rubber mallet, measuring tape & utility knife
- Windex or household glass cleaner

Assembly Requirements

- A minimum of two strong persons are required for this assembly.
- Follow these installation requirements when assemblying the SPT-6X.
- Layout your floor plan before assemblying.
- Set up the SPT-6X on a clean, solid, flat surface. A smooth, flat surface under the machine helps keep it level.
- Allow ample space around the machine for safe unrestricted use and easier access.
- Insert all bolts in the same direction. For aesthetic appearance, insert all bolts in the same direction unless specified (in text or illustration) to do otherwise.
- Leave room for adjustments. Do not fully tighten fasteners until instructed in the assembly steps to do so (to prevent any difficulty with alignment of parts during the assembly process). When not instructed, tighten fasteners such as bolts, nuts and screws so the unit is stable, but leave room for adjustments.

Assembly Tips

Read all "Notes" on each page before beginning each step.

While you may be able to assemble the SPT-6X using the illustrations only, IMPORTANT safety notes and other tips are included in the text.

Some pieces may have extra holes that you will not use. Use only those holes indicated in the instructions and illustration.

NOTE: With so many assembled parts, proper alignment and adjustment is critical. While tightening the nuts and bolts, be sure to leave room for final adjustments.

CAUTION: Obtain assistance from TuffStuff Fitness if you have difficulty assemblying the SPT-6X. Please do not attempt to complete the assembly as this could result in equipment failure and serious injuries to the users.

Symbols & Description

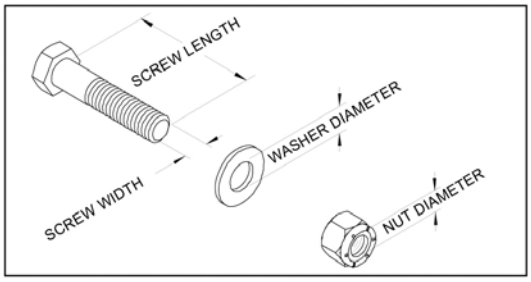

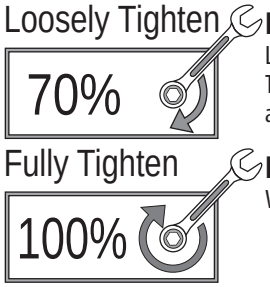

Loosely Tighten
Loosely tighten all hardware in this step. DO NOT Fully Tighten. Some component(s) may need pre-assembly and or alignment during the assembly process.

Fully Tighten
Wrench tighten all hardware in this step.

Step 1

Assembly List		
Item #	**Description**	**Qty.**
11	**MAIN FRAME**	**1**
12	**REAR STABILIZER**	**1**
25	**HANDLE**	**2**
49	FLAT WASHER SAE B/O 3/8”	20
56	HEX HEAD CAP SCREW GR-5 B/O 3/8-16 X 1 3/4	6
60	HEX HEAD CAP SCREW GR-5 B/O 3/8-16 X 4	2
67	NYLON INSERT THIN LOCK NUT B/O 3/8-16	8
68	BLACK NYLON PULLEY 3/8 X 1 X 3 1/2	4
85	SPLIT LOCK WASHER B/O 3/8”	4
91	HEX HEAD CAP SCREW GR-5 B/O 3/8-16 X 4 1/4	4

Fully Tighten

100%

Wrench tighten all hardware in this step.

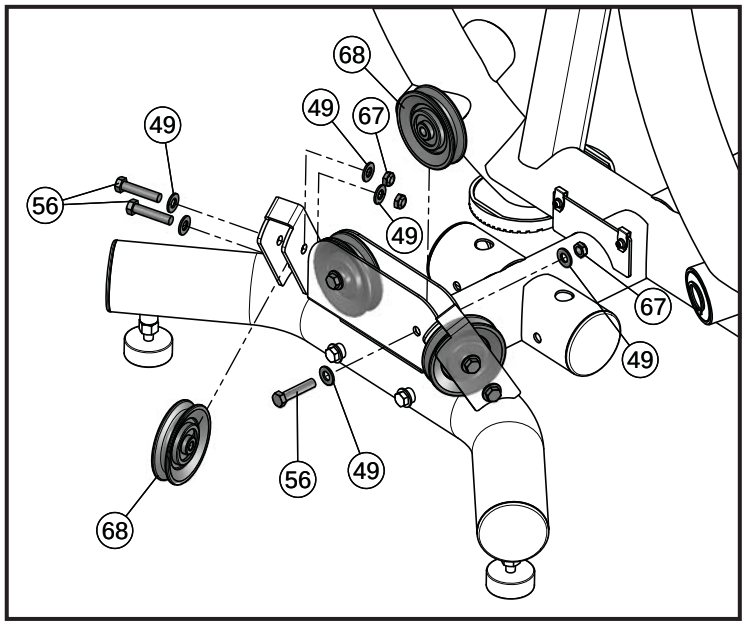

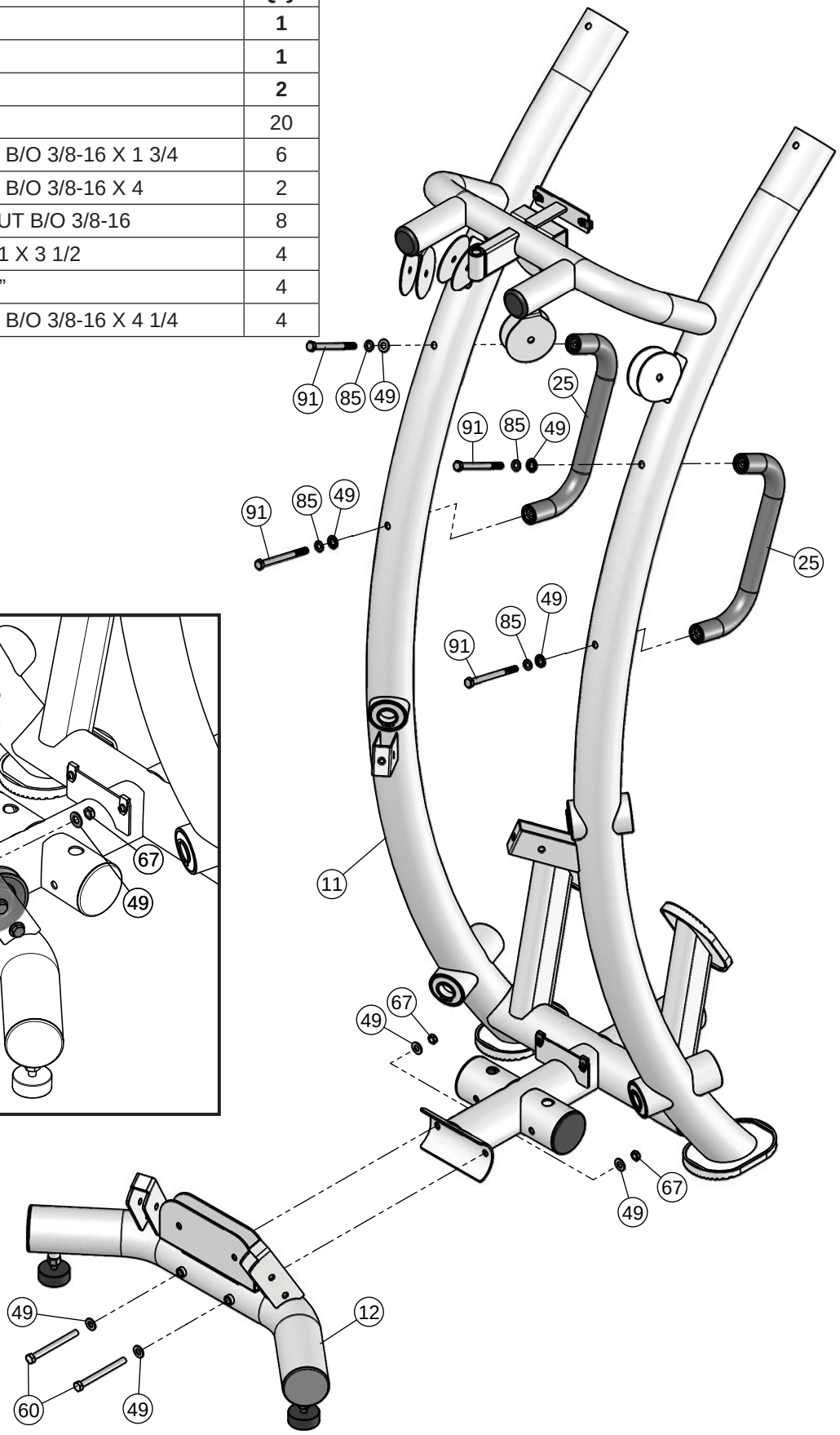

Step 2

Assembly List

Item #	Description	Qty.
1	**ADJUSTABLE DOUBLE PULLEY BRACKET**	**1**
4	**DOUBLE FLOATING PULLEY BRACKET LT**	**1**
5	**DOUBLE FLOATING PULLEY BRACKET RT**	**1**
21	**TOP BEARING HOUSING**	**2**
23	**TOP SWIVEL PULLEY BRACKET**	**2**
49	FLAT WASHER SAE B/O 3/8”	14
56	HEX HEAD CAP SCREW GR-5 B/O 3/8-16 X 1 3/4	6
57	HEX HEAD CAP SCREW GR-5 B/O 3/8-16 X 3	1
67	NYLON INSERT THIN LOCK NUT B/O 3/8-16	7
68	BLACK NYLON PULLEY 3/8 X 1 X 3 1/2	4
69	NYLON PULLEY 3/8 X 1 X 4 1/2 BLACK	4

Fully Tighten

100%

Wrench tighten all hardware in this step.

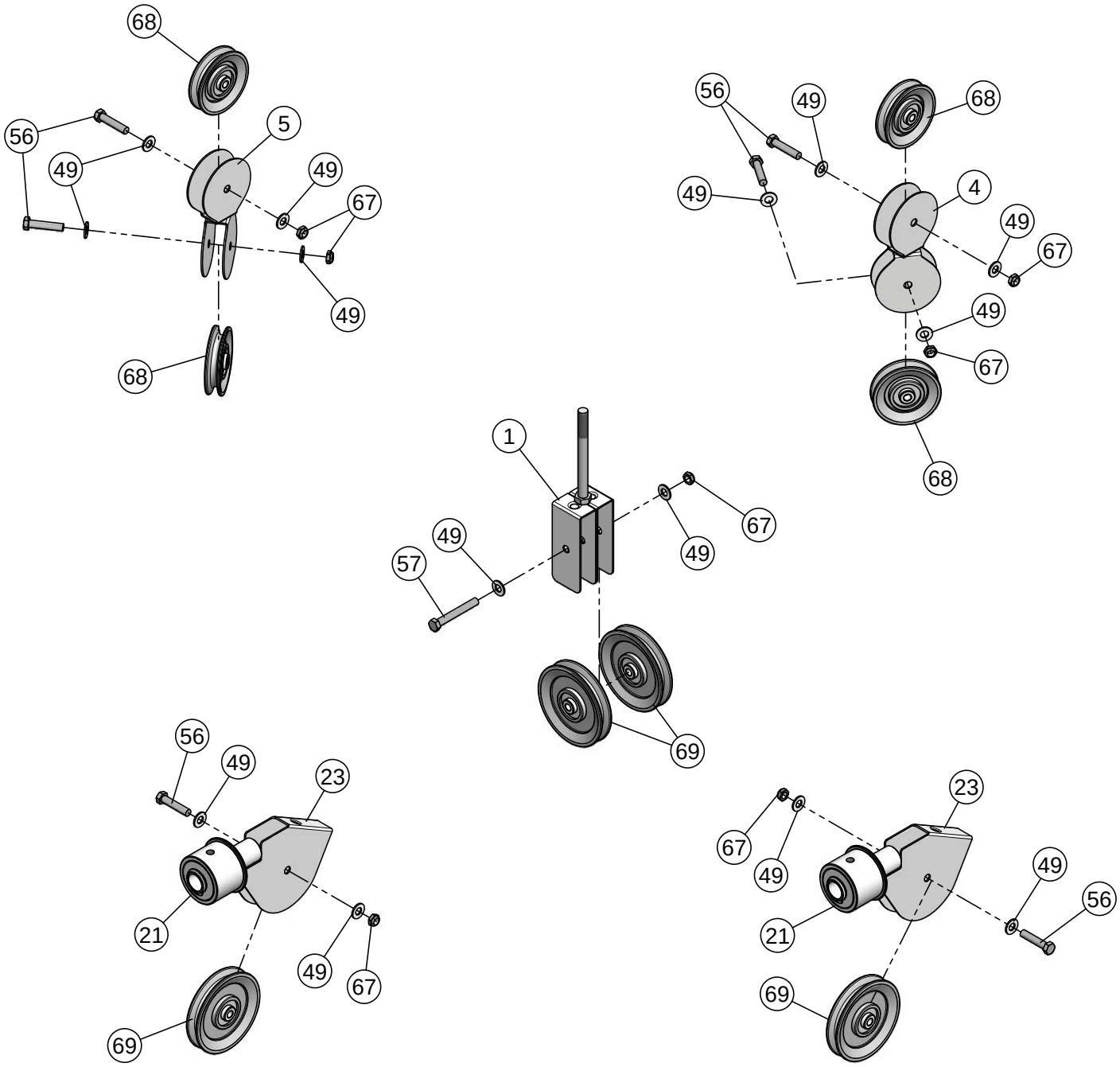

Step 3

Assembly List

Item #	Description	Qty.
1	**ADJUSTABLE DOUBLE PULLEY BRACKET**	**1**
9	**LONG DOUBLE SWIVEL PULLEY BRKT**	**2**
20	**SHORT DOUBLE SWIVEL PULLEY BRKT**	**2**
43	FINISHED HEX NUT B/O 1/2-13	2
47	FLAT WASHER SAE B/O 1/2”	2
75	RETAINING SNAP RING EXT. PLAIN 1 1/4”	4
84	SPLIT LOCK WASHER B/O 1/2”	1

Loosely Tighten

70%

Loosely tighten all hardware in this step. DO NOT Fully Tighten. Some component(s) may need pre-assembly and or alignment during the assembly process.

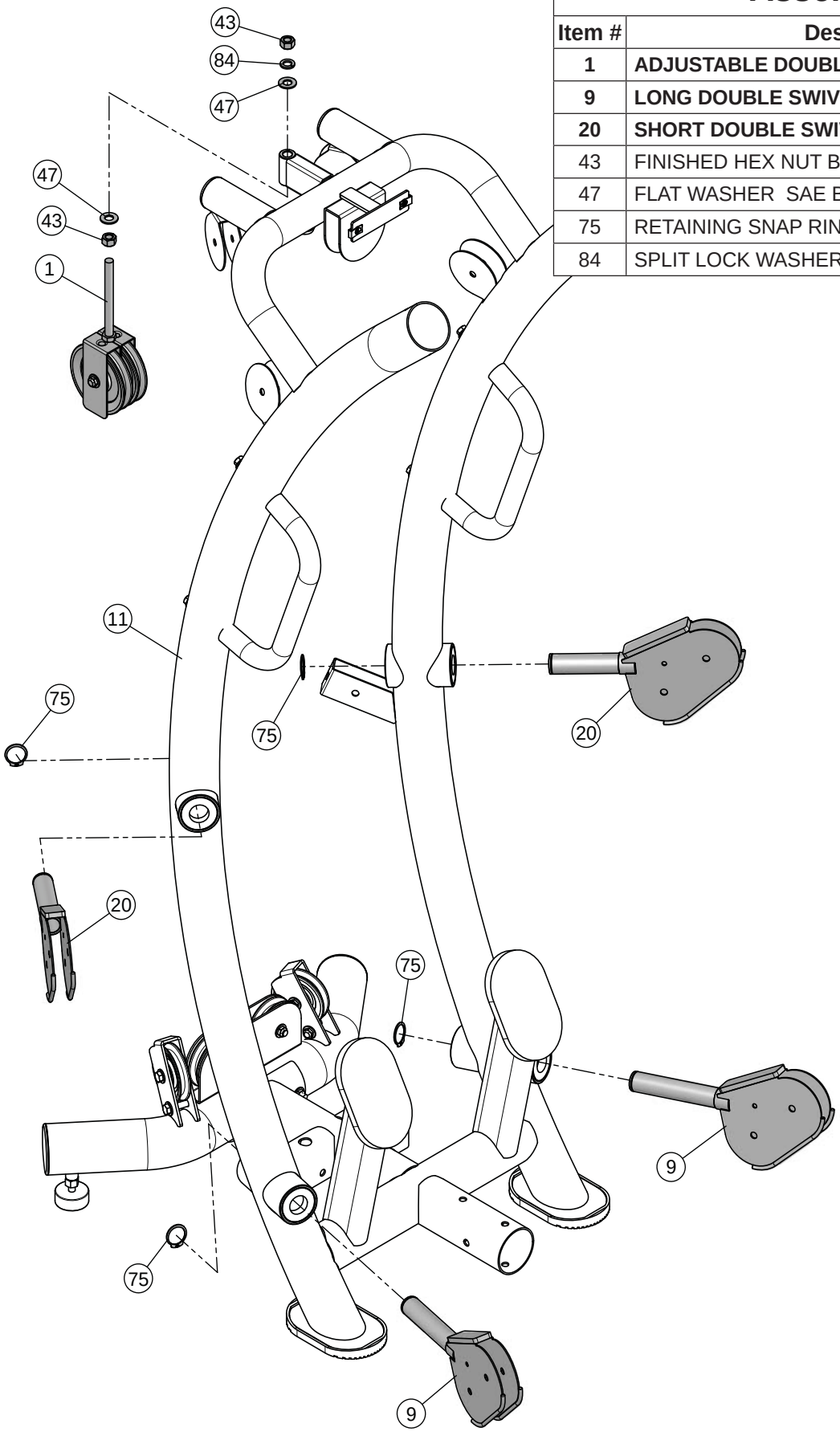

Step 4

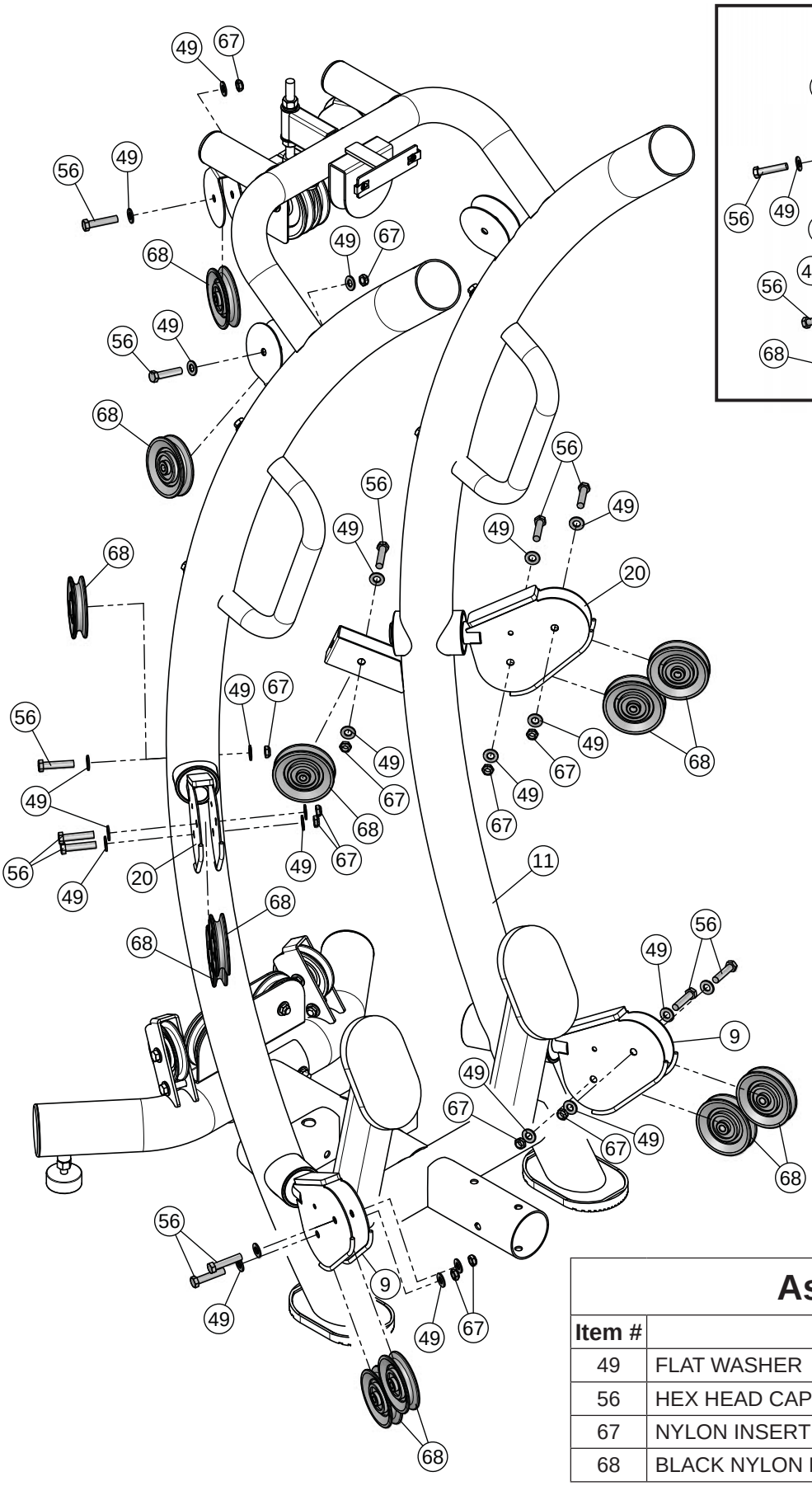

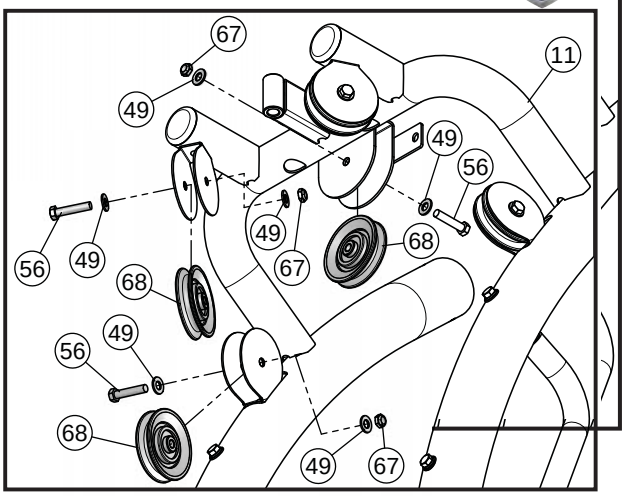

Fully Tighten

100%

Wrench tighten all hardware in this step.

Assembly List

Item #	Description	Qty.
49	FLAT WASHER SAE B/O 3/8”	30
56	HEX HEAD CAP SCREW GR-5 B/O 3/8-16 X 1 3/4	15
67	NYLON INSERT THIN LOCK NUT B/O 3/8-16	15
68	BLACK NYLON PULLEY 3/8 X 1 X 3 1/2	15

Step 5

NOTE: If Downgrading to 150 lbs.Weight Stack, you'll need to assemble:

Item #	Description	Qty.
50	FLAT WASHER B/O 3/4 X 2"	2
93	WEIGHT STACK SPACER 5" **(USED ONLY WITH 150 lbs)**	**2**

as illustrated below.

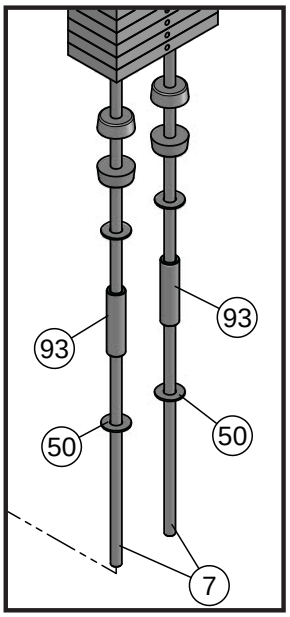

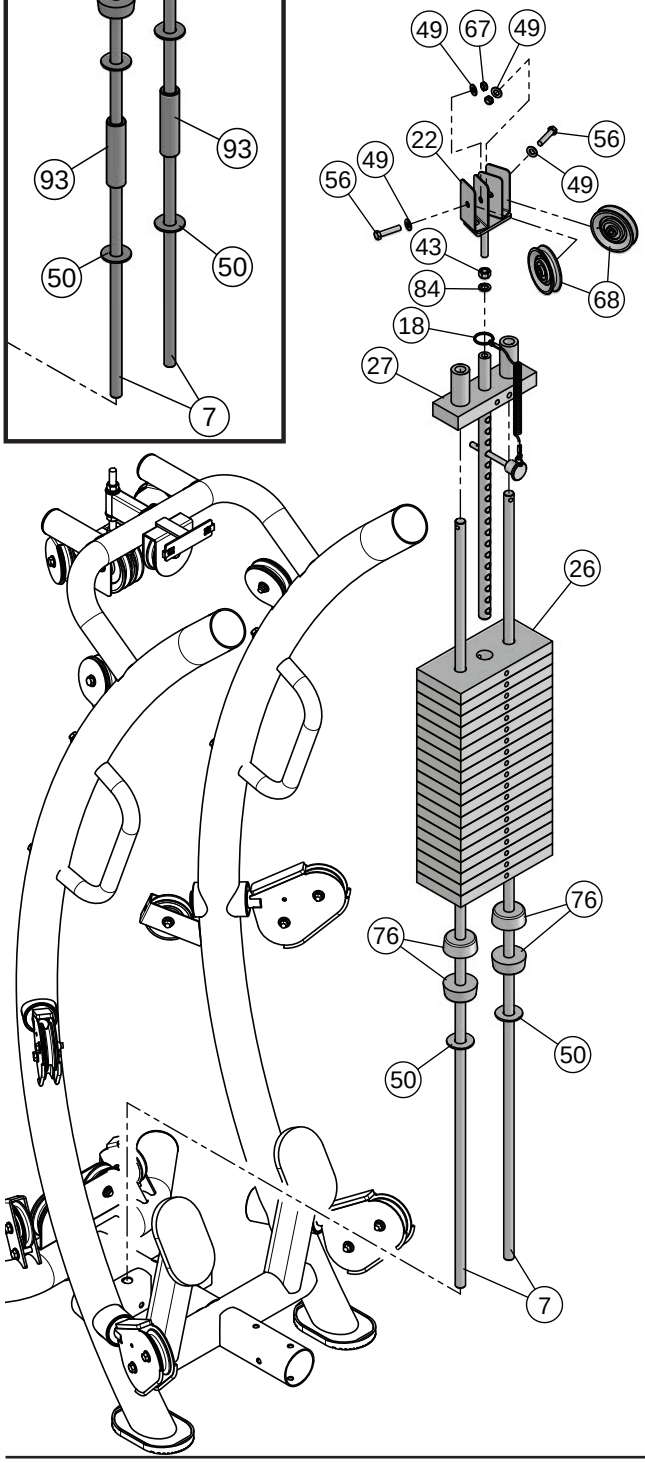

Assembly List

Item #	Description	Qty.
7	**GUIDE ROD 3/4 RD X 67 1/2**	**2**
18	**SELECTOR PIN W/COIL 3/8 X 4 GOLD KNOB**	**1**
22	**TOP PLATE PULLEY BRACKETS**	**1**
26	10 LB STEEL WEIGHT PLATE BLACK	19
27	10 LB TOP PLATE W/ADJ SLTR BAR	1
43	FINISHED HEX NUT B/O 1/2-13	1
49	FLAT WASHER SAE B/O 3/8"	8
50	FLAT WASHER B/O 3/4 X 2"	2
56	HEX HEAD CAP SCREW B/O 3/8-16 X 1 3/4	2
58	HEX HEAD CAP SCREW B/O 3/8-16 X 3 1/2	2
67	NYLON INSERT THIN LOCK NUT B/O 3/8-16	4
68	BLACK NYLON PULLEY 3/8 X 1 X 3 1/2	2
76	RUBBER DONUT 1 X 2 1/2	4
84	SPLIT LOCK WASHER B/O 1/2"	1

Fully Tighten

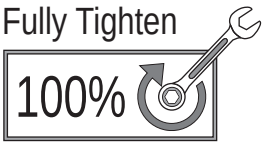

Wrench tighten all hardware in this step.

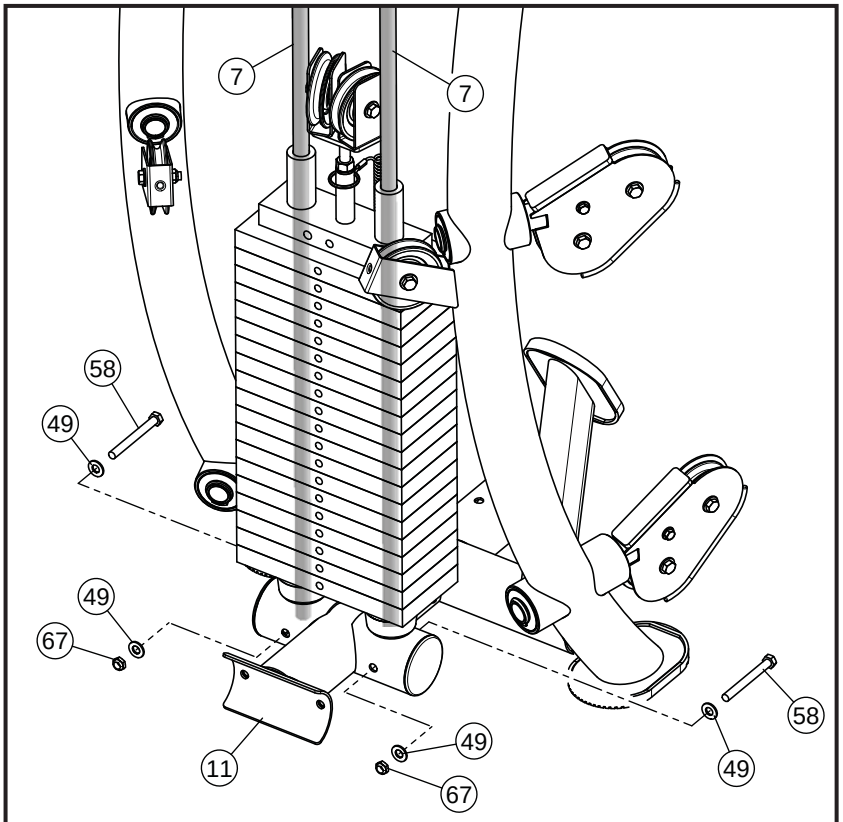

Raise and hold Guide Rods ⑦ up to assemble hardware as shown.

Step 6

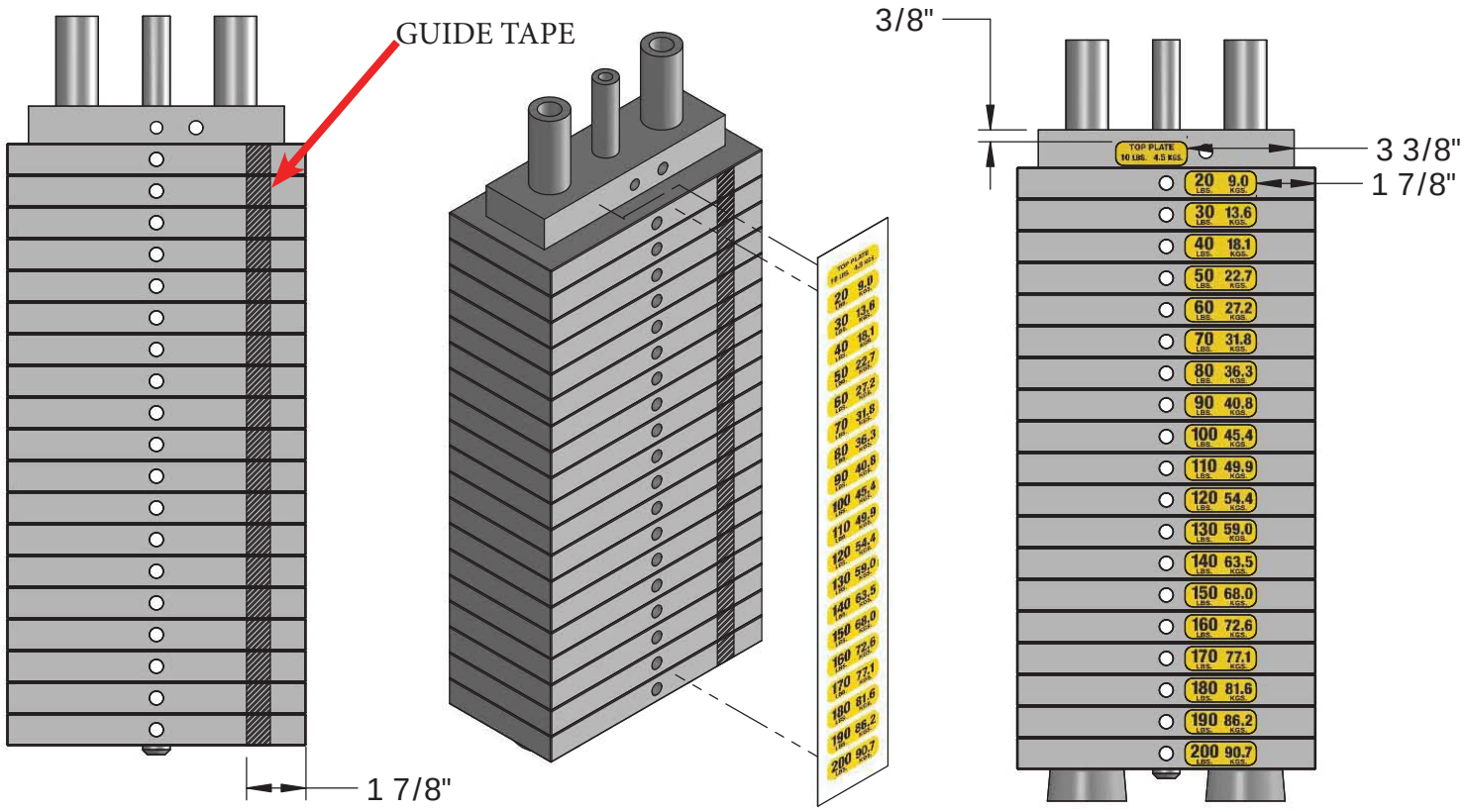

Weight stack label and lubrication instructions

1. Wipe front surface of weight stack with rubbing alcohol and wipe dry.
2. Apply a temporary tape at 1 7/8" distance from the edge as shown to guide you.
3. Peel off back sheet (adhesive side) from label and make sure that the label remains attached to the application tape.
4. Line up edge of labels to the edge of guide tape (Make sure not to go over it).
5. Make sure label is straight and center on plate. Slowly press into place.
6. Apply pressure to each label firmly against the weights.
7. Gently remove application tape and guide tape.
8. Allow labels to stand for 2 days to allow adhesive to cure fully.
9. Open the lube package provided and apply a thin film of lubricant around the first 3 inches of the guide rods above the top plate (Grease).
10. After the cables are installed, do a set of reps to spread the lubricant thoroughly.

Step 7 (Lat Cable Routing)

NOTE:

1. CAREFULLY FOLLOW CABLE ROUTING INSTRUCTIONS, MAKING SURE THAT THE FLOATING DOUBLE PULLEY BRACKETS GET ASSEMBLED AS ILLUSTRATED BELOW.

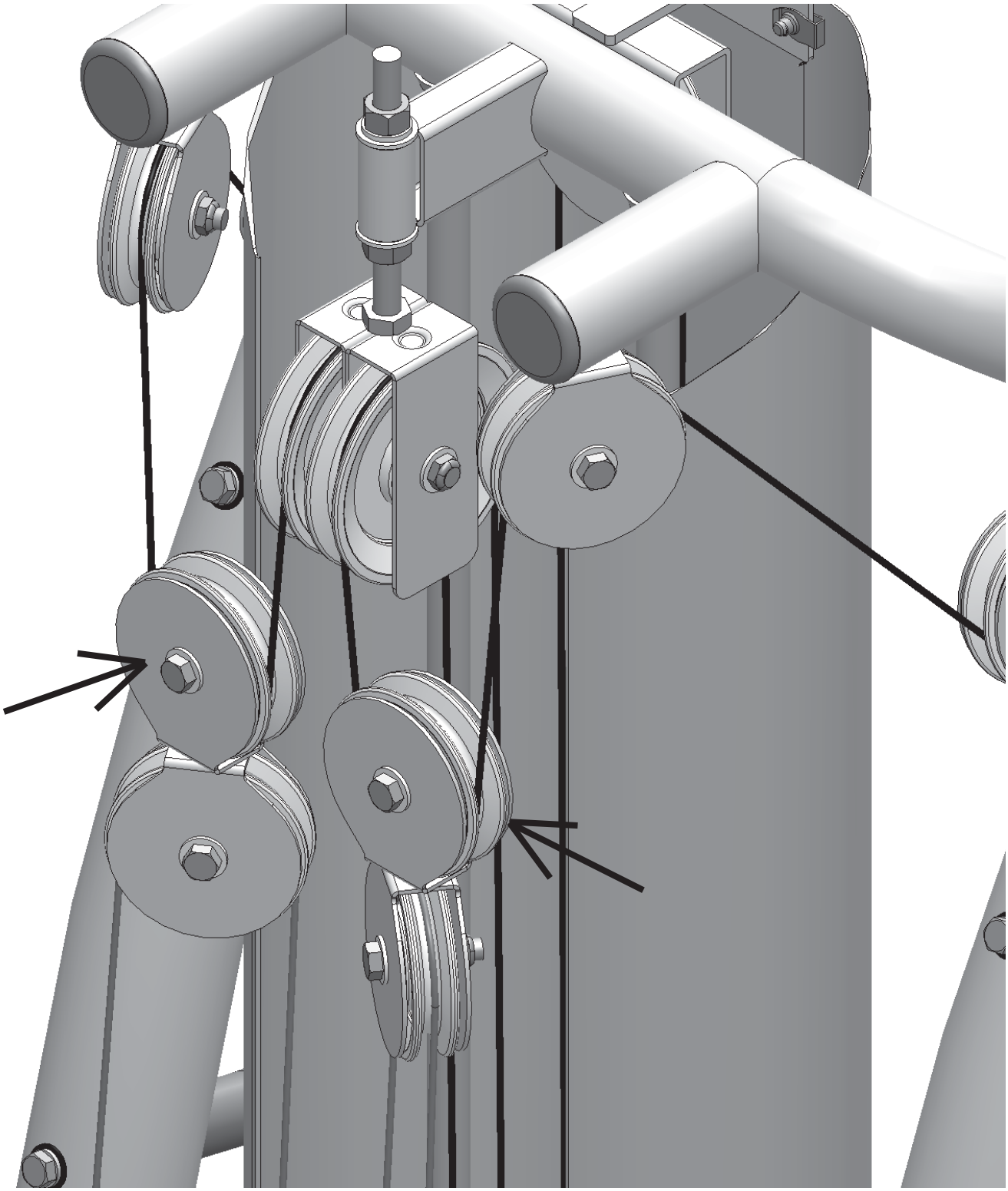

Step 8 (Lat Cable Routing)

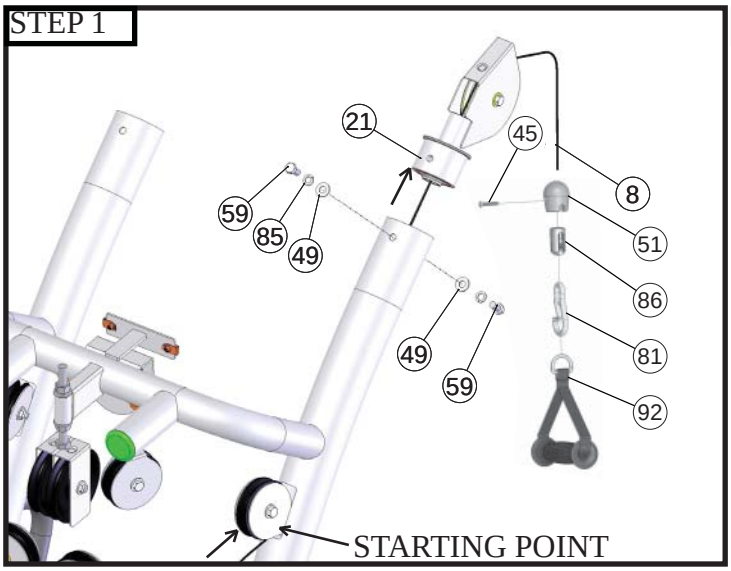

RUN CABLE THROUGH STARTING POINT INTO TOP SWIVEL PULLEY BRACKET AS SHOWN AND THEN ASSEMBLE IT TO THE UNIT.

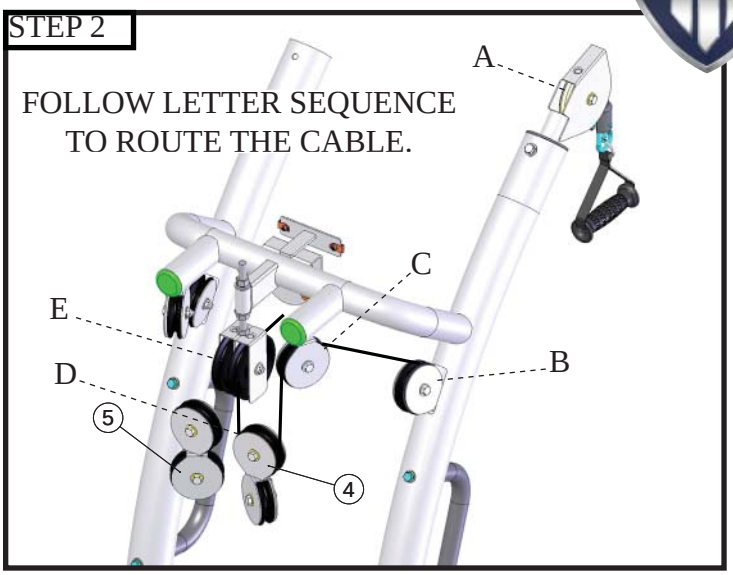

NOTE: PULLEY BRACKETS (#4, #5) HAVE BEEN SWAPED PLACES FROM PREVIOUS OWNERS MANUAL. ASSEMBLE AS SHOWN ABOVE.

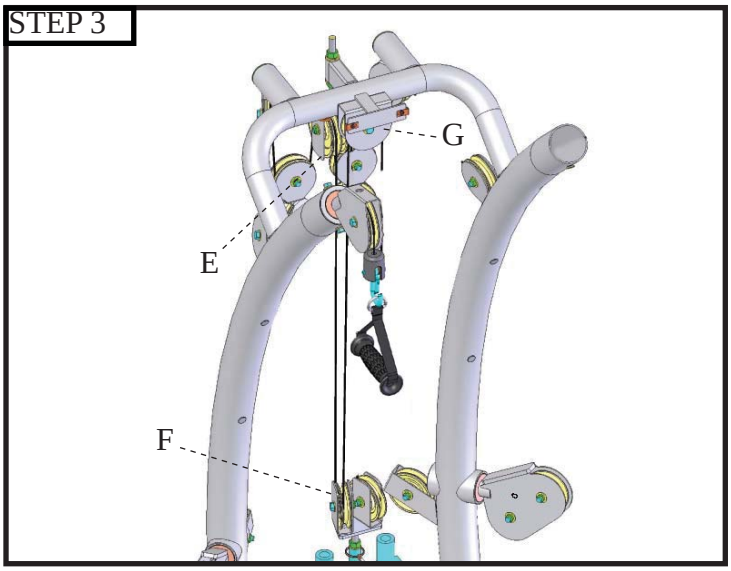

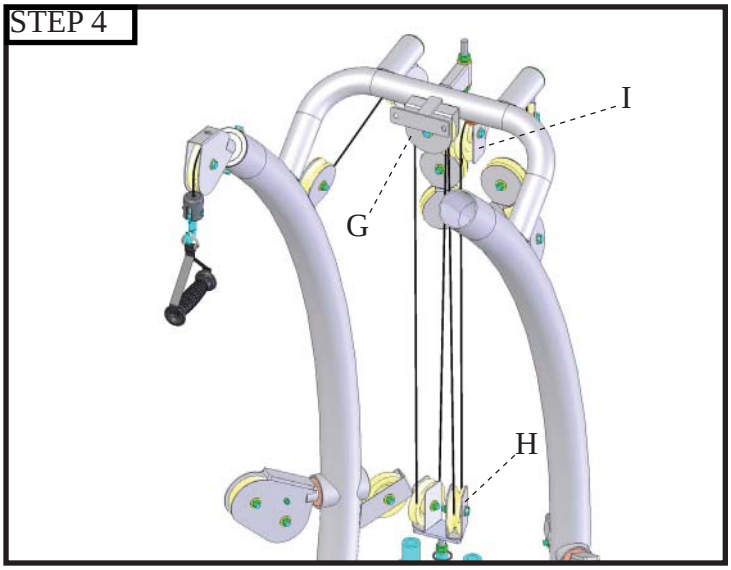

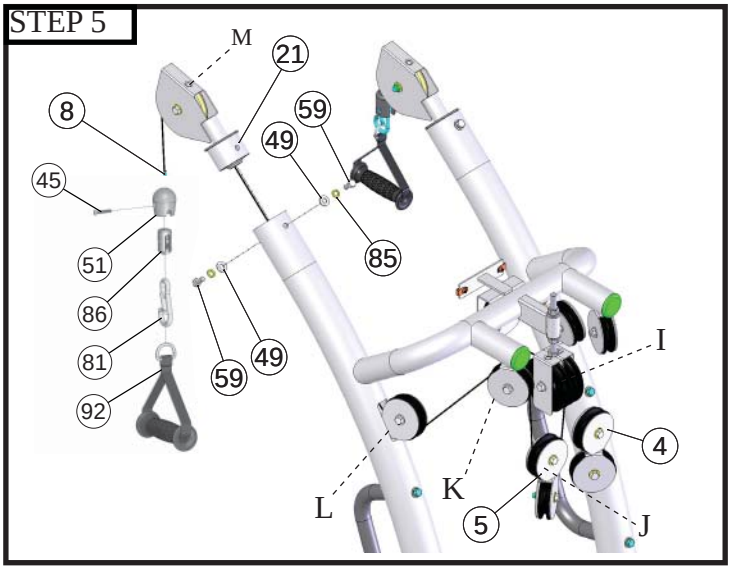

Assembly List

Item #	Description	Qty.
4	**DOUBLE FLOATING PULLEY BRACKET LT**	**1**
5	**DOUBLE FLOATING PULLEY BRACKET RT**	**1**
8	**LAT CABLE**	**1**
21	**TOP BEARING HOUSING**	**2**
45	Oval Head Phillips Screw #10-32 X 1 1/8	2
49	FLAT WASHER SAE B/O 3/8”	4
51	Cable Stopper Shell 1 1/2 x 1 3/4	2
59	HEX HEAD CAP SCREW GR-5 B/O 3/8-16 X 3/4	4
81	SNAP LINK Z/P 8MM X 80MM	2
85	SPLIT LOCK WASHER B/O 3/8”	4
86	7/8 Rd X 1 5/8 Link 1/8 Cable	2
92	CONTOUR ERGO HANDLE SHORT STRAP	2

Step 9 (Lat Cable Mapping Diagram)

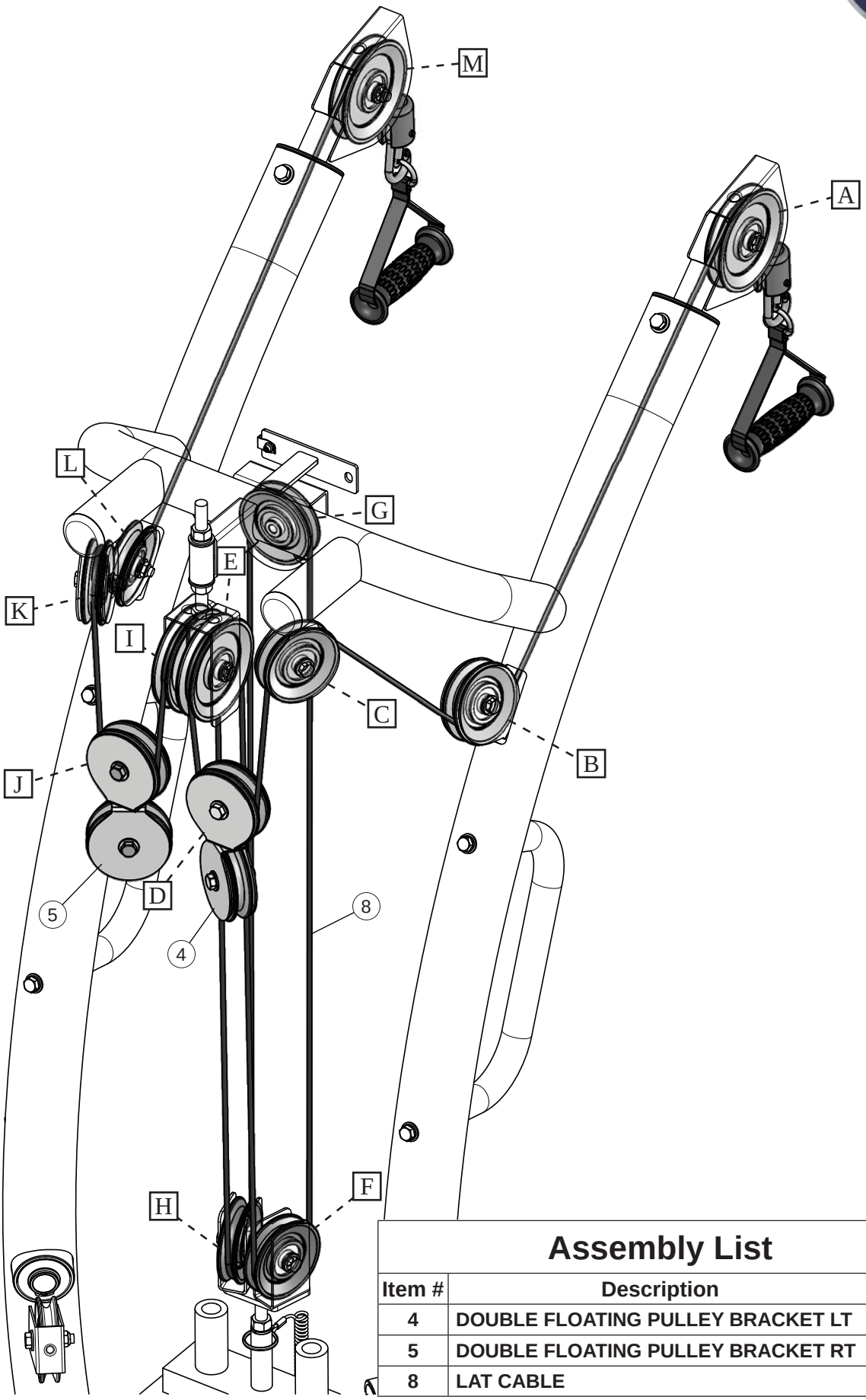

Assembly List

Item #	Description	Qty.
4	DOUBLE FLOATING PULLEY BRACKET LT	1
5	DOUBLE FLOATING PULLEY BRACKET RT	1
8	LAT CABLE	1

Step 10 (Low Row Cable Routing)

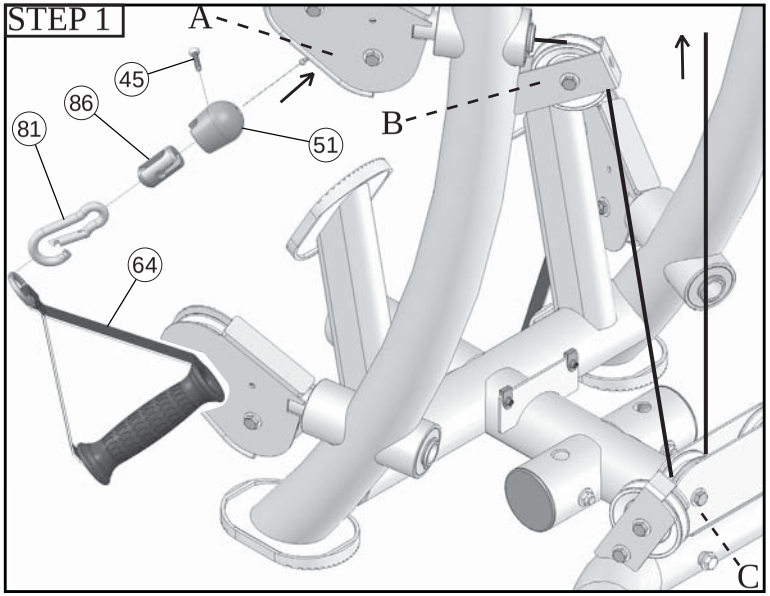

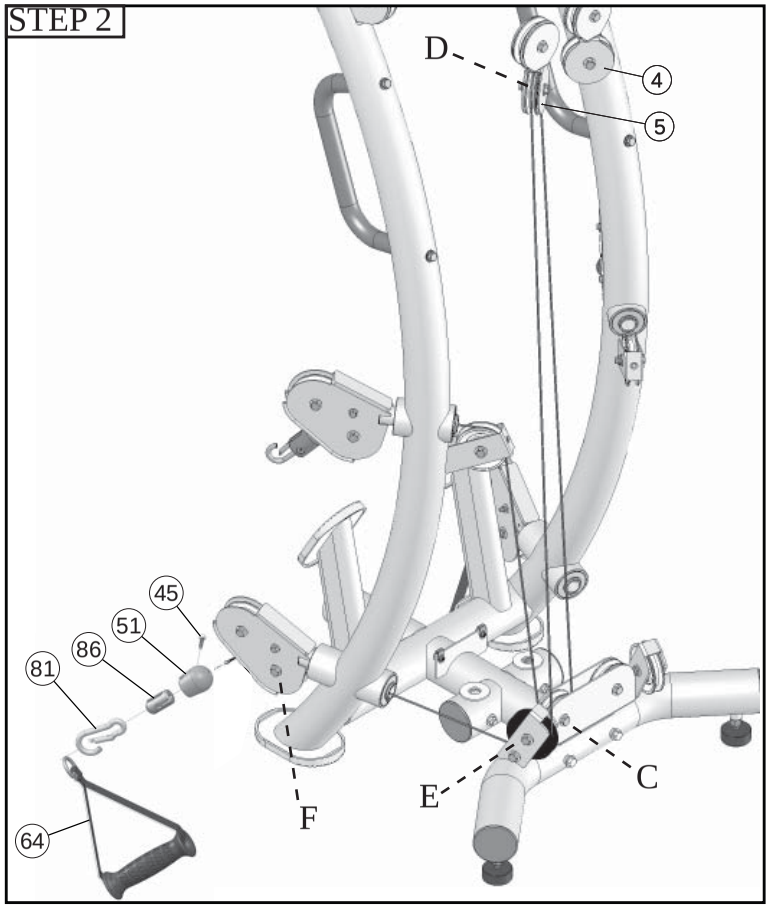

Assembly List

Item #	Description	Qty.
5	**DOUBLE FLOATING PULLEY BRACKET RT**	**1**
10	**LOW ROW CABLE**	**1**
45	Oval Head Phillips Screw #10-32 X 1 1/8	2
48	FLAT WASHER SAE B/O 1/4”	4
51	Cable Stopper Shell 1 1/2 x 1 3/4	2
53	HEX HEAD CAP SCREW GR-5 B/O 1/4-20 X 1 3/4	2
64	CONTOUR ERGO HANDLE LONG STRAP	2
65	NYLON INSERT LOCK NUT B/O 1/4-20	2
81	SNAP LINK Z/P 8MM X 80MM	2
86	7/8 Rd X 1 5/8 Link 1/8 Cable	2

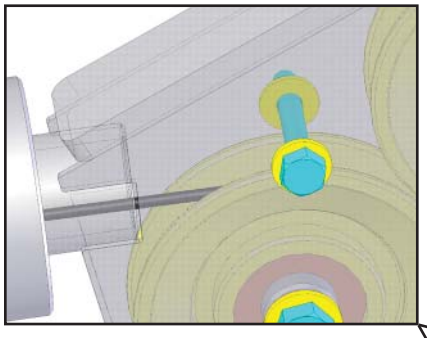

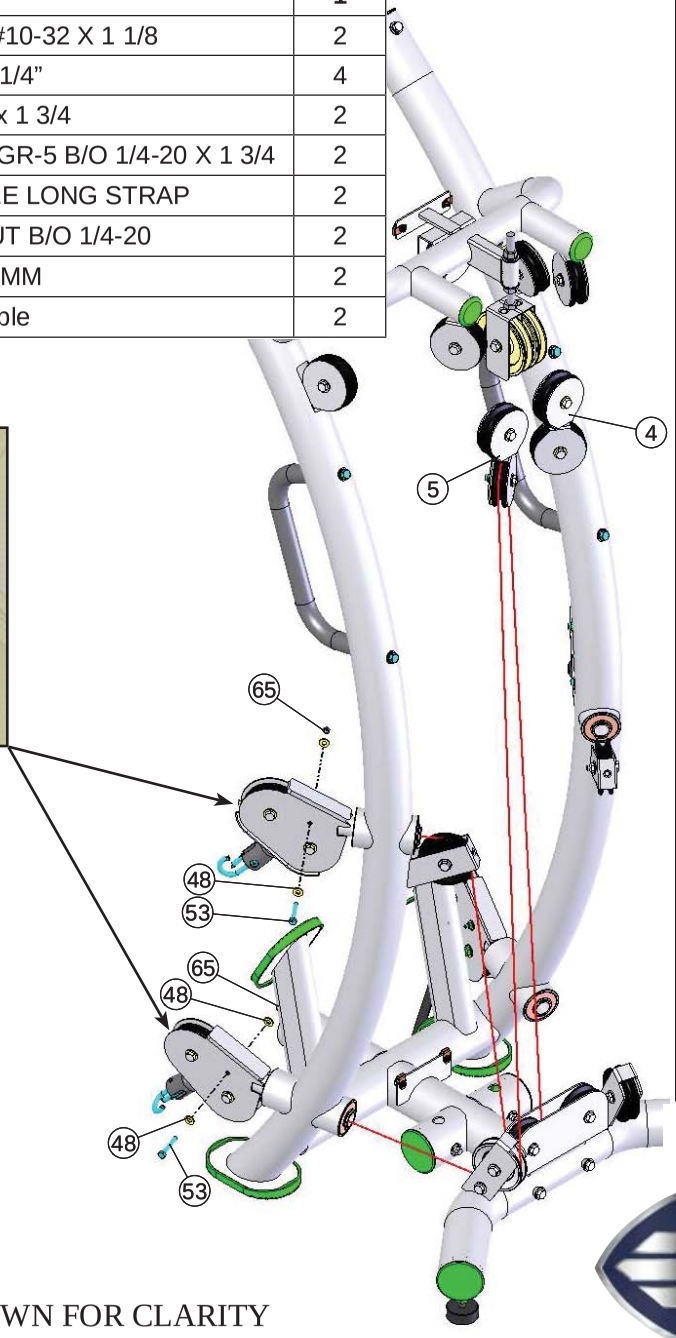

NOTES:
1. SOME PARTS NOT SHOWN FOR CLARITY

Step 11 (Low Row Cable Routing)

Assembly List

Item #	Description	Qty.
4	**DOUBLE FLOATING PULLEY BRACKET LT**	**1**
10	**LOW ROW CABLE**	**1**
45	Oval Head Phillips Screw #10-32 X 1 1/8	2
48	FLAT WASHER SAE B/O 1/4"	4
51	Cable Stopper Shell 1 1/2 x 1 3/4	2
53	HEX HEAD CAP SCREW GR-5 B/O 1/4-20 X 1 3/4	2
63	NYLON ANKLE STRAP	1
64	CONTOUR ERGO HANDLE LONG STRAP	2
65	NYLON INSERT LOCK NUT B/O 1/4-20	2
81	SNAP LINK Z/P 8MM X 80MM	2
86	7/8 Rd X 1 5/8 Link 1/8 Cable	2

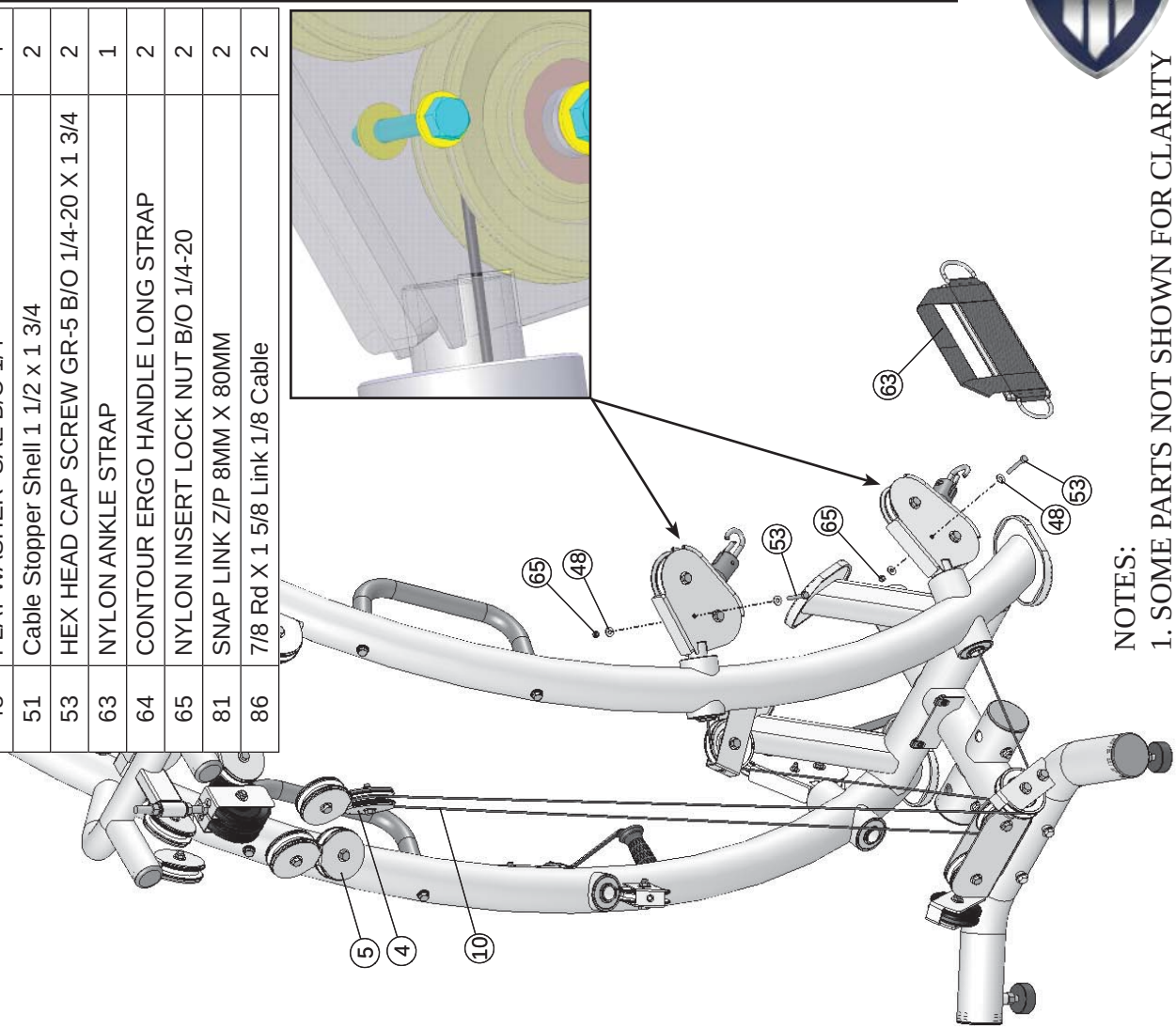

NOTES:
1. SOME PARTS NOT SHOWN FOR CLARITY

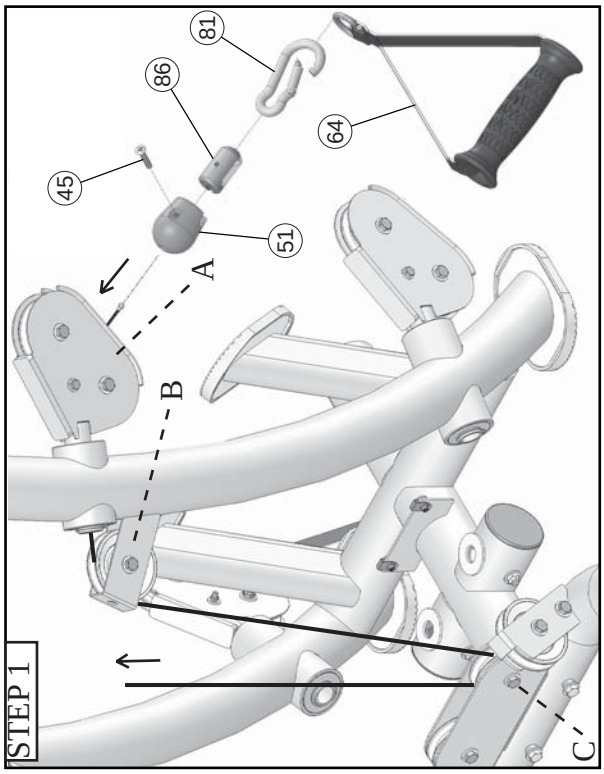

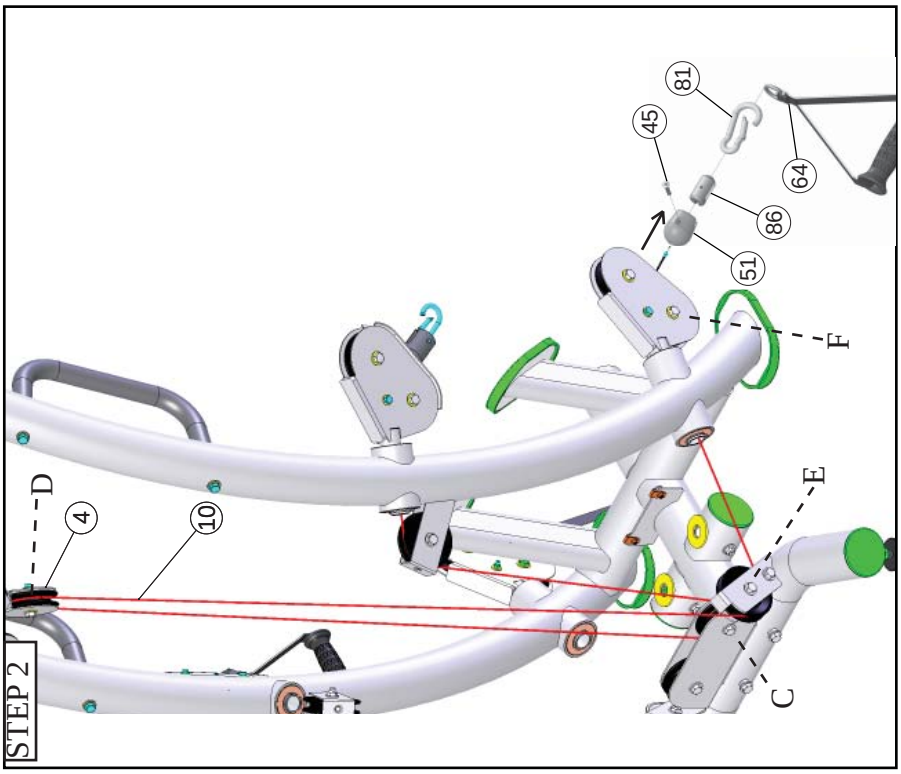

Step 12

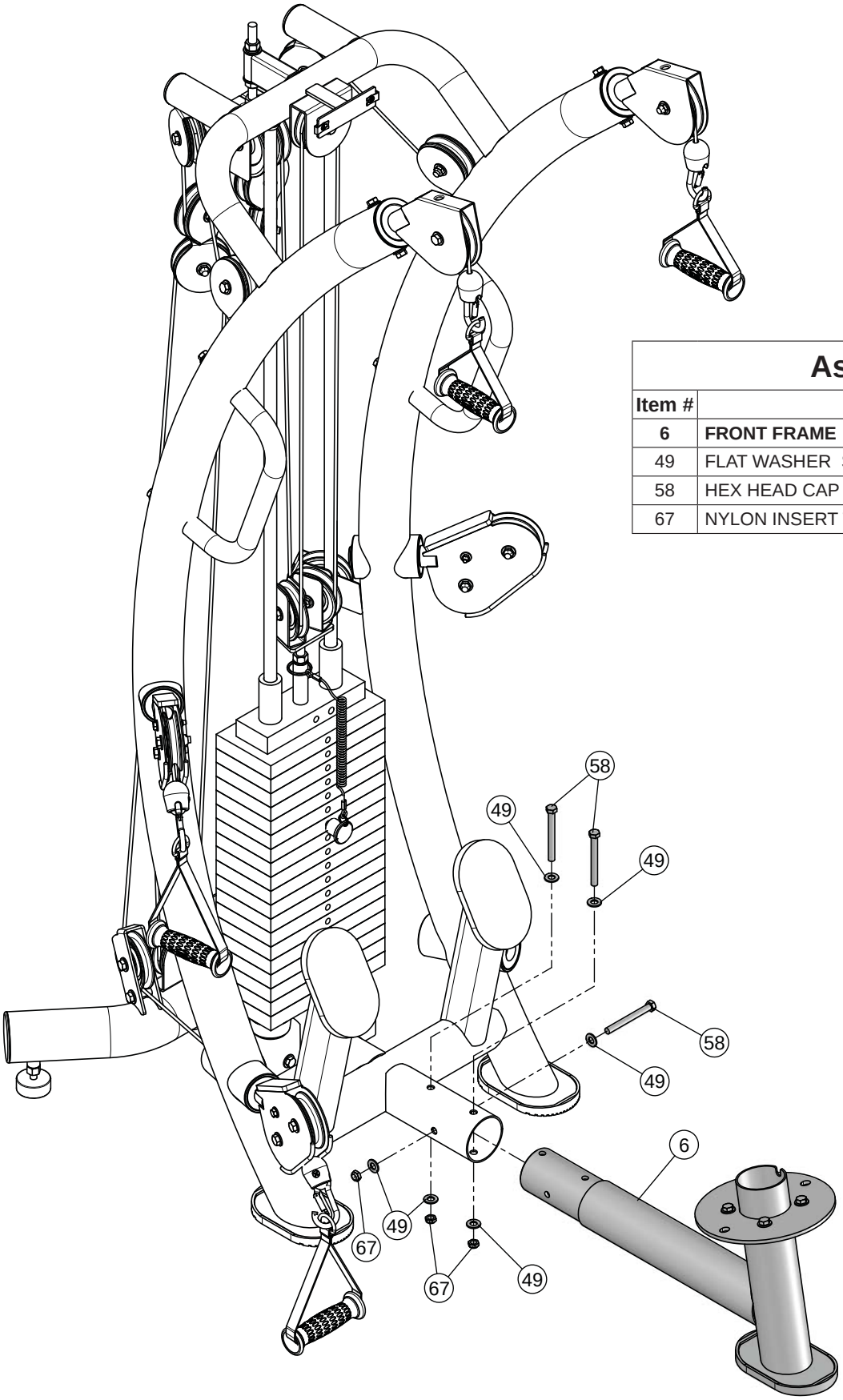

Assembly List		
Item #	**Description**	**Qty.**
6	**FRONT FRAME**	**1**
49	FLAT WASHER SAE B/O 3/8”	6
58	HEX HEAD CAP SCREW GR-5 B/O 3/8-16 X 3 1/2	3
67	NYLON INSERT THIN LOCK NUT B/O 3/8-16	3

Fully Tighten

100%

Wrench tighten all hardware in this step.

Step 13

Assembly List		
Item #	**Description**	**Qty.**
3	**BACK PAD FRAME**	**1**
15	**SEAT BEARING HOUSING**	**1**
16	**SEAT FRAME**	**1**
47	FLAT WASHER SAE B/O 1/2”	2
49	FLAT WASHER SAE B/O 3/8”	2
52	HEX HEAD CAP SCREW GR-5 B/O 1/2-13 X 5 1/2	1
59	HEX HEAD CAP SCREW GR-5 B/O 3/8-16 X 3/4	2
66	NYLON INSERT THIN LOCK NUT B/O 1/2-13	1
83	SOCKET SET SCREW ALLOY 3/8-16 X 1/2	1
85	SPLIT LOCK WASHER B/O 3/8”	2

Fully Tighten

100%

Wrench tighten all hardware in this step.

MAKE SURE THE SOCKET SET 3/8-16 X 1/2 (83) IS LOCKED ON THE NOTCH OF THE **MAIN FRAME (6)**.

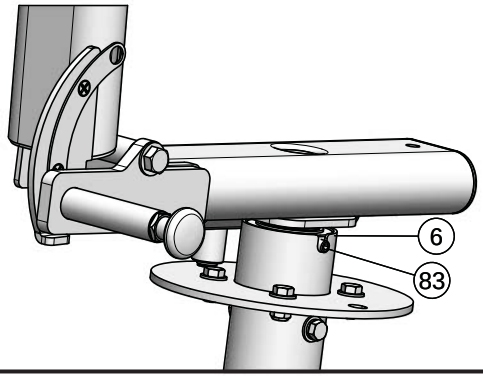

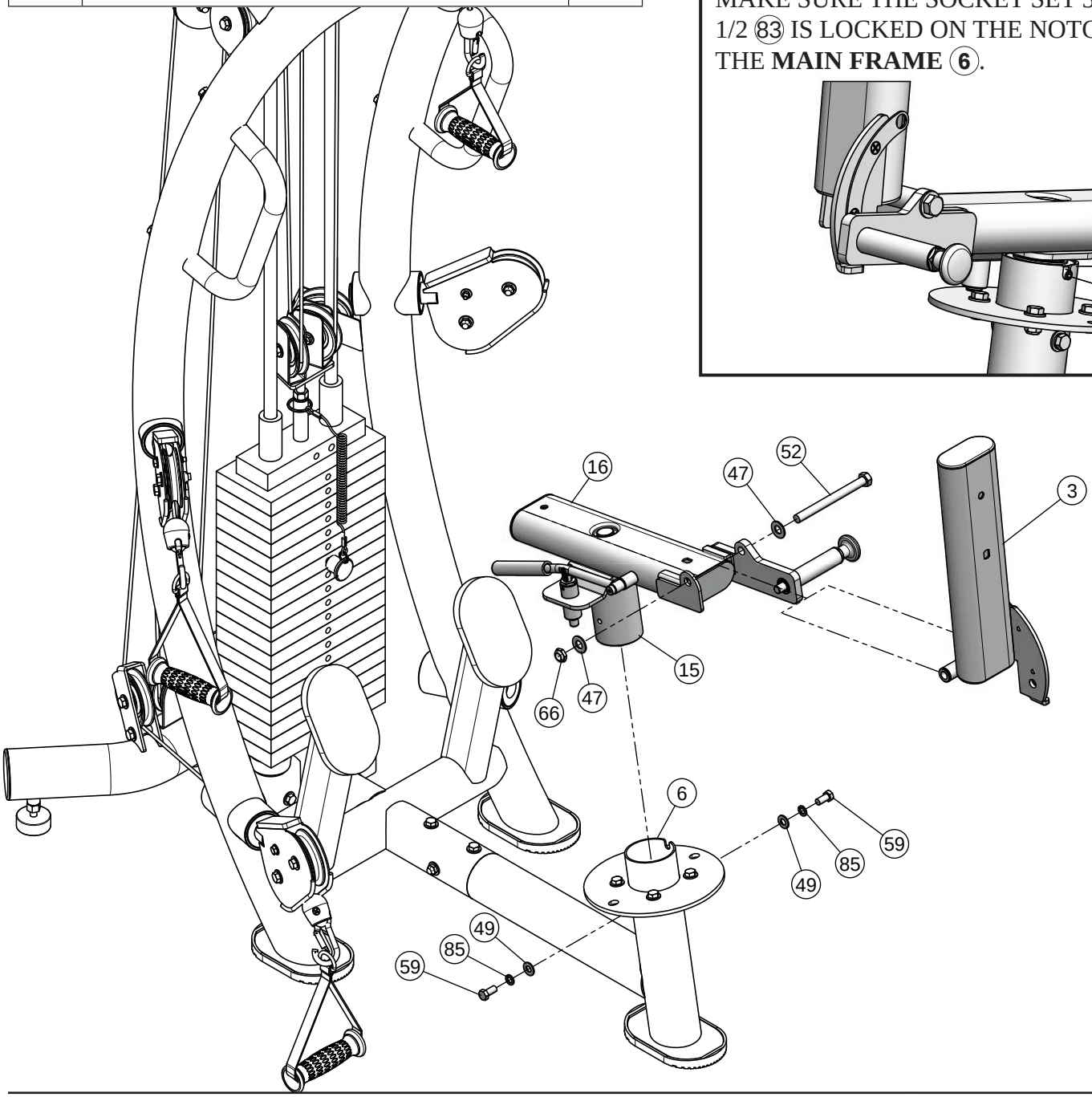

Step 14

Fully Tighten

100%

Wrench tighten all hardware in this step.

Assembly List

Item #	Description	Qty.
24	**WEIGHT SHIELD**	**1**
48	FLAT WASHER SAE B/O 1/4”	4
54	HEX HEAD CAP SCREW GR-5 B/O 1/4-20 X 3/4	4

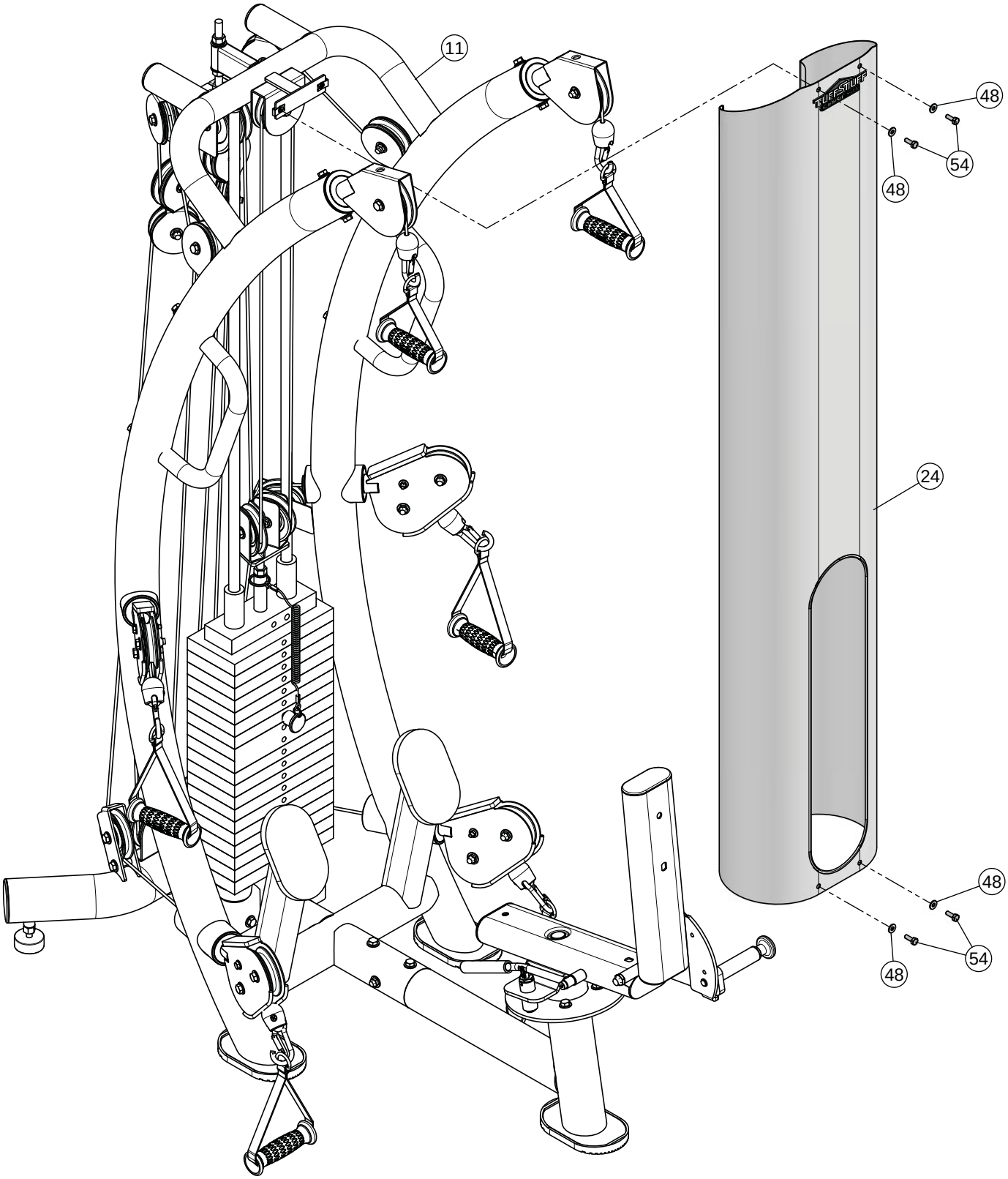

Step 15

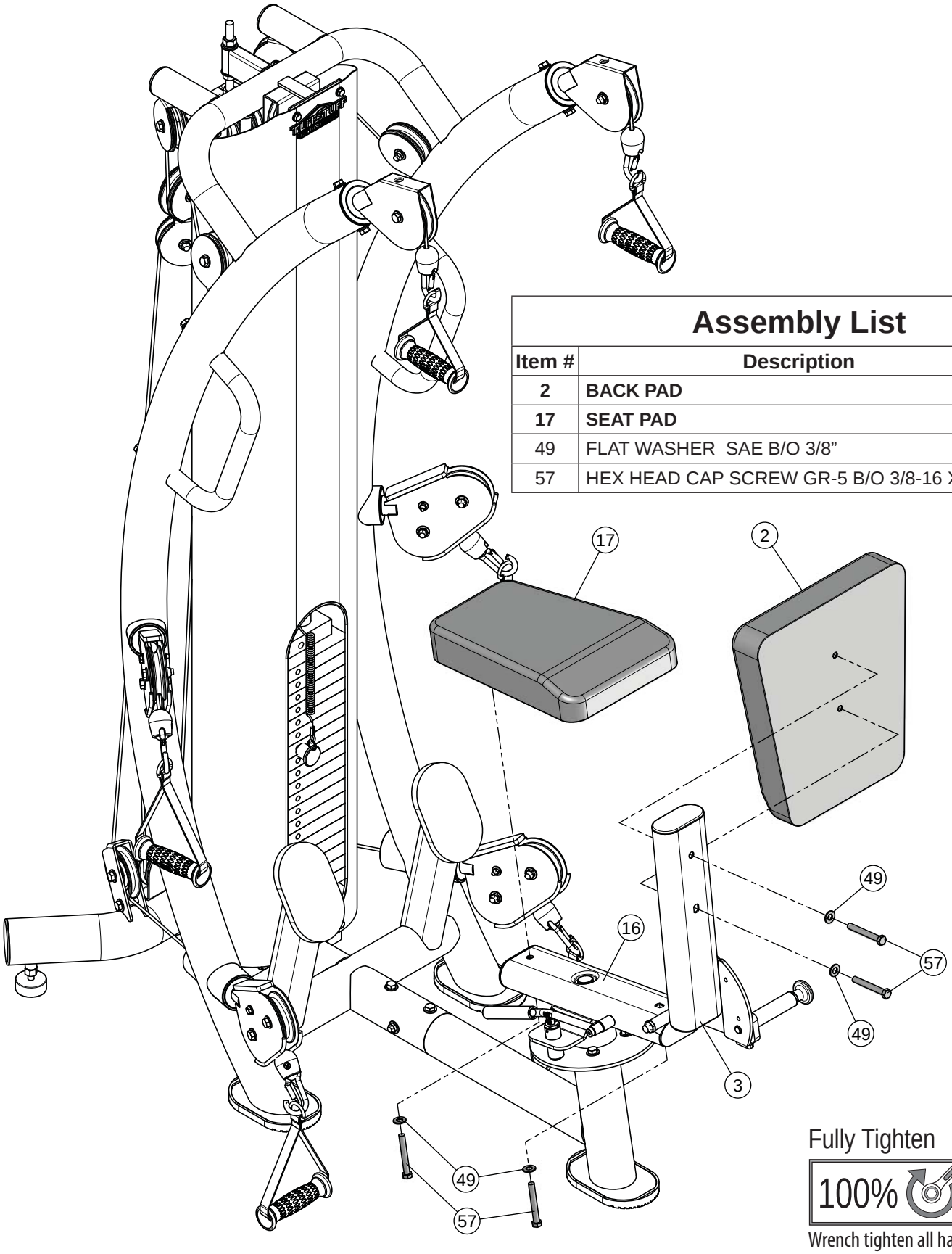

Assembly List		
Item #	**Description**	**Qty.**
2	**BACK PAD**	**1**
17	**SEAT PAD**	**1**
49	FLAT WASHER SAE B/O 3/8”	4
57	HEX HEAD CAP SCREW GR-5 B/O 3/8-16 X 3	4

Fully Tighten

100%

Wrench tighten all hardware in this step.

Step 16

Fully Tighten

100%

Proceed to align and Wrench Tighten these hardware assemblies and all of the previous assemblies that were left loosely fastened.

98

CAUTION

Adjust LEVELER to the floor surface for stability.

BNH3119

MAKE NECESARY ADJUSTMENTS ON THE TWO ADJUSTABLE ADAPTERS

SPT-6X Exploded View

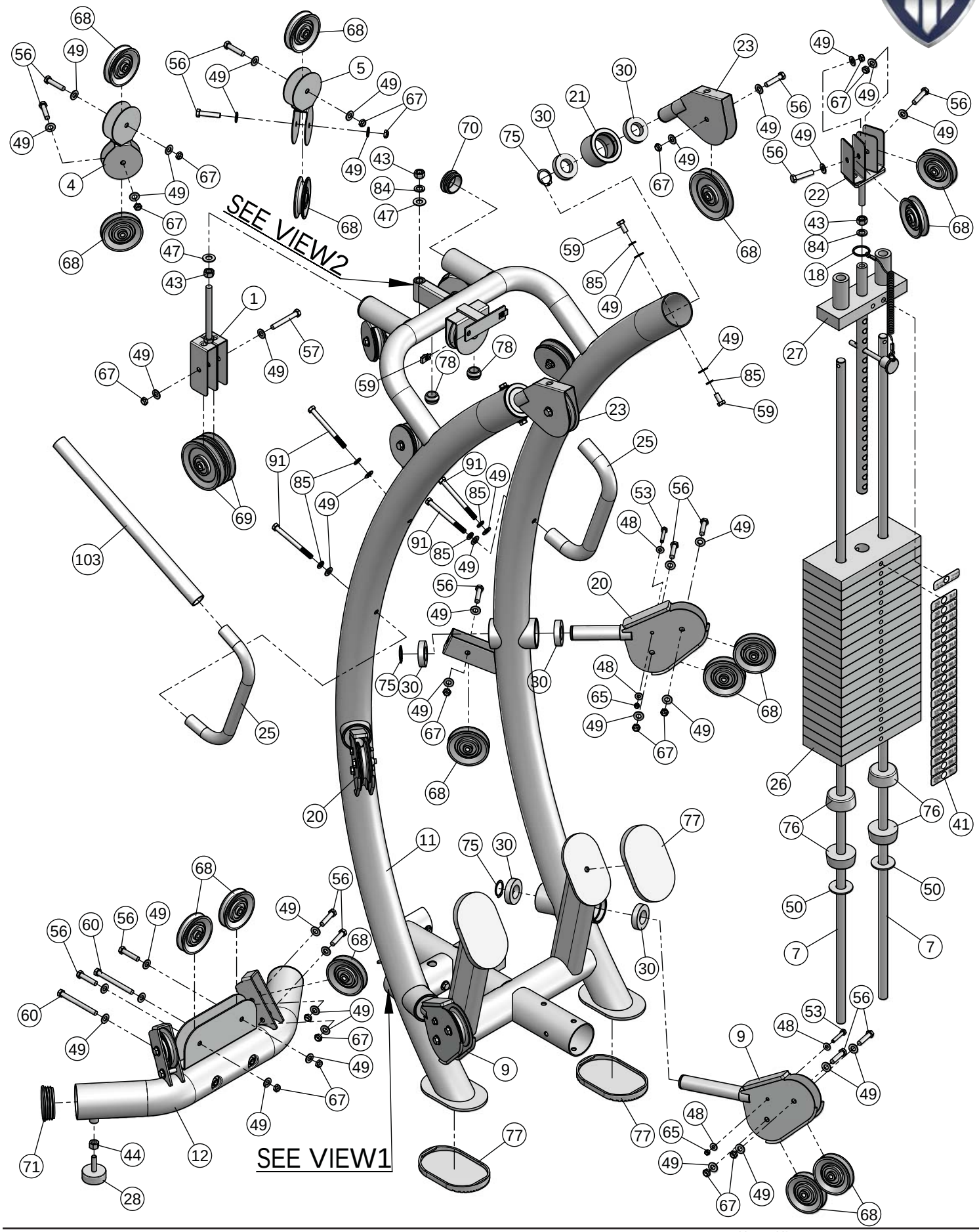

SPT-6X Exploded View

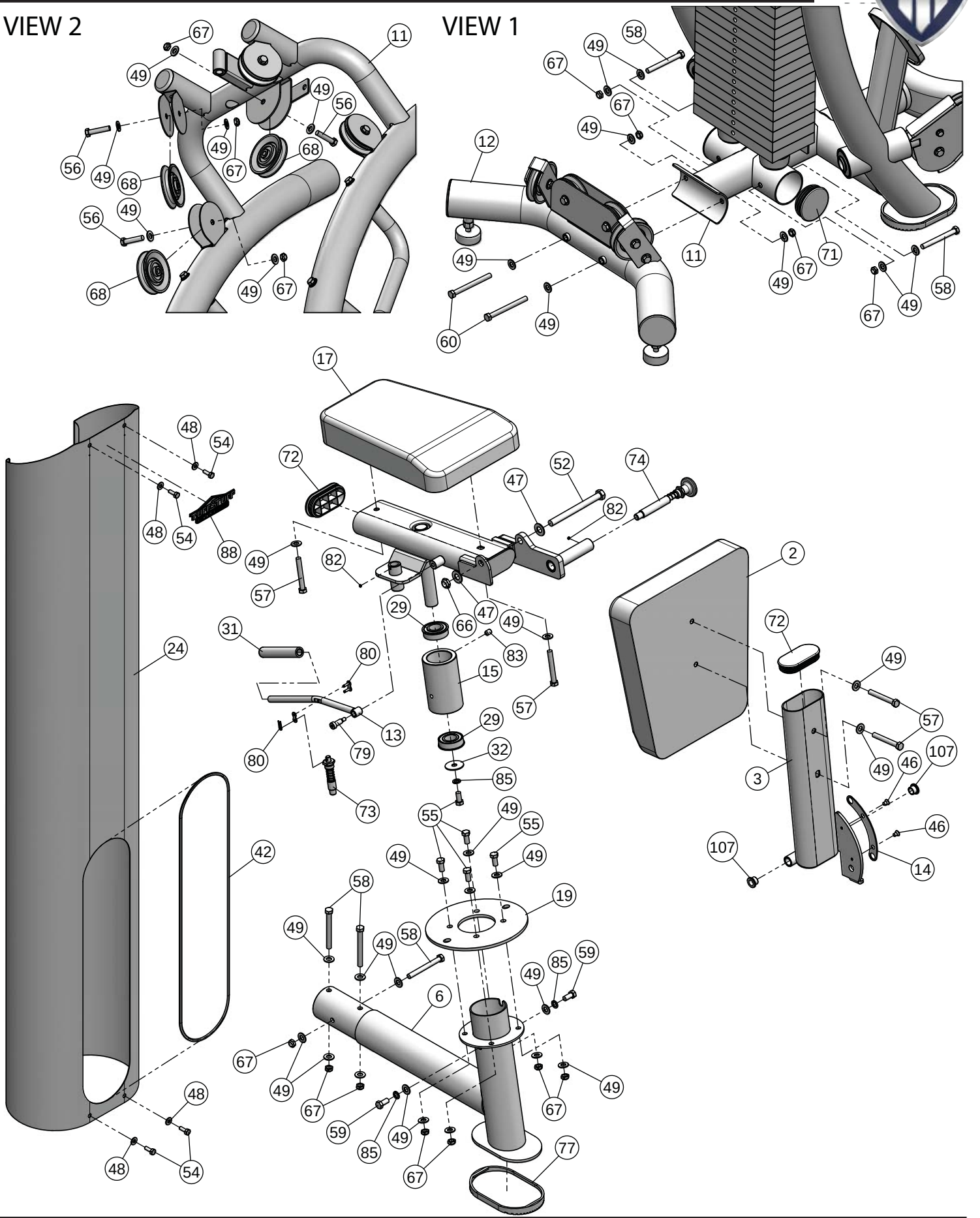

COLOR CHART
BOLD FONT = SUB-ASSEMBLY PARTS
BLACK= HARDWARE

SPT-6X
Parts List

ITEM NO.	DESCRIPTION	REV.	PART NO.	QTY.
1	**ADJUSTABLE DOUBLE PULLEY BRACKET**	**0**	**UP6165**	**1**
2	**BACK PAD**	**0**	**UP6167**	**1**
3	**BACK PAD FRAME**	**1**	**UP6168**	**1**
4	**DOUBLE FLOATING PULLEY BRACKET LT**	**0**	**UP6170**	**1**
5	**DOUBLE FLOATING PULLEY BRACKET RT**	**0**	**UP6171**	**1**
6	**FRONT FRAME**	**0**	**UP6172**	**1**
7	**GUIDE ROD 3/4 RD X 67 1/2**	**0**	**UP6187**	**2**
8	**LAT CABLE**	**0**	**UP6184**	**1**
9	**LONG DOUBLE SWIVEL PULLEY BRKT**	**0**	**UP6173**	**2**
10	**LOW ROW CABLE**	**0**	**UP7594**	**2**
11	**MAIN FRAME**	**0**	**UP6175**	**1**
12	**REAR STABILIZER**	**0**	**UP7595**	**1**
13	**RELEASE HANDLE**	**0**	**UP6177**	**1**
14	**SCRATCH PROTECTOR**	**0**	**UP6178**	**1**
15	**SEAT BEARING HOUSING**	**0**	**UP6169**	**1**
16	**SEAT FRAME**	**1**	**UP6179**	**1**
17	**SEAT PAD**	**0**	**UP6180**	**1**
18	**SELECTOR PIN W/COIL 3/8 X 4 GOLD KNOB**	**0**	**UP3035**	**1**
19	**SELECTOR PLATE**	**0**	**UP6181**	**1**
20	**SHORT DOUBLE SWIVEL PULLEY BRKT**	**0**	**UP6182**	**2**
21	**TOP BEARING HOUSING**	**0**	**UP6166**	**2**
22	**TOP PLATE PULLEY BRACKETS**	**0**	**UP6183**	**1**
23	**TOP SWIVEL PULLEY BRACKET**	**0**	**UP3634**	**2**
24	**WEIGHT SHIELD**	**0**	**UP6185**	**1**
25	**HANDLE**	**0**	**UP7075**	**2**
26	10 LB STEEL WEIGHT PLATE 4 9/16 X 9 7/16		BNH1650	19
27	10 LB TOP PLATE W/ADJ SLTR BAR 19 BLK WTS		BNH1982	1
28	ADJUSTABLE ADAPTER		BNH2279	2
29	BALL BEARING #W 516		BNH0628	2
30	BALL BEARING R20-RS (4 I.D. X 2 1/4 X 1/2)		BNH1712	12
31	BLACK RUBBER GRIP 1/2 X 4 7/8		BNH1818	1
32	CHROME WASHER 3/8 X 1 1/2		BNH1015	1
33	Label-IMPORTANT ADJUST Cable Tension Here		BNH2924	1
34	Label WARNING_Serious Injury or Death		BNH2939	1
35	Label DANGER CHECK retaining nut... 1.5x1		BNH2902	2
36	Label-EXERCISE CHART (SPT-6)		BNH2277	1
37	Label-IMPORTANT For smooth performance...		BNH2925	1
38	Label IMPORTANT Check Cables		BNH3113	1
39	Label-WARNING Keep body, hands…		BNH2926	1
40	Label WARNING Keep body, hands, 1 1/2 x 2 1/4		BNH2908	2
41	DECAL NUMBERS 10-200 LBS/KGS 3/4 X 2 1/4		BNH4423	1
42	EDGE PROTECTOR CHROME 11 GA		BNH1724	1
43	FINISHED HEX NUT B/O 1/2-13		BNH0201	3
44	FINISHED HEX NUT B/O M10-1.5		BNH0651	2
45	Oval Head Phillips Screw Z/P #10-32 X 1 1/8		BNH2793	6
46	FLAT PHILLIPS UNDERCUT 1/4-20 X 3/8		BNH2163	2
47	FLAT WASHER SAE B/O 1/2"		BNH0239	4
48	FLAT WASHER SAE B/O 1/4"		BNH0877	12
49	FLAT WASHER SAE B/O 3/8"		BNH0239	96
50	FLAT WASHER B/O 3/4 X 2"		BNH0878	4
51	Cable Stopper Shell 1 1/2 x 1 3/4		BNH4230	6
52	HEX HEAD CAP SCREW GR-5 B/O 1/2-13 X 5 1/2		BNH0267	1
53	HEX HEAD CAP SCREW GR-5 B/O 1/4-20 X 1 3/4		BNH1338	4

ITEM NO.	DESCRIPTION	PART NO.	QTY.
54	HEX HEAD CAP SCREW GR-5 B/O 1/4-20 X 3/4	BNH0890	4
55	HEX HEAD CAP SCREW GR-5 B/O 3/8-16 X 1	BNH0275	5
56	HEX HEAD CAP SCREW GR-5 B/O 3/8-16 X 1 3/4	BNH0274	29
57	HEX HEAD CAP SCREW GR-5 B/O 3/8-16 X 3	BNH0282	5
58	HEX HEAD CAP SCREW GR-5 B/O 3/8-16 X 3 1/2	BNH0280	5
59	HEX HEAD CAP SCREW GR-5 B/O 3/8-16 X 3/4	BNH0283	6
60	HEX HEAD CAP SCREW GR-5 B/O 3/8-16 X 4	BNH0285	2
61	HEX KEY ALLOY 3/32"	BNH0372	1
62	HEX KEY LONG ARM ALLOY 3/16"	BNH0371	1
63	NYLON ANKLE STRAP	BNH3203	1
64	CONTOUR ERGO HANDLE LONG STRAP	BNH2738	4
65	NYLON INSERT LOCK NUT B/O 1/4-20	BNH0213	4
66	NYLON INSERT THIN LOCK NUT B/O 1/2-13	BNH0366	1
67	NYLON INSERT THIN LOCK NUT B/O 3/8-16	BNH0365	41
68	Black Nylon Pulley Wide Groove 3/8 X 1 X 3 1/2	BNH2832	25
69	Black Nylon Pulley Wide Groove 3/8 X 1 X 4 1/2	BNH2834	4
70	PLASTIC INSERT CAP 2" RD 10-14 GA	BNH0004	2
71	PLASTIC INSERT CAP 3" RD 10-14 GA	BNH1364	4
72	PLASTIC INSERT CAP ELLIPTICAL 2 X 4	BNH1794	2
73	PULL PIN ASSY 3 1/2 DRILLED	BNH1721	1
74	PUSH PULL PIN 1/2 X 5 5/8 LIGHT SPRING	BNH0586	1
75	RETAINING SNAP RING EXT. PLAIN 1 1/4"	BNH1718	6
76	RUBBER DONUT 3/4 X 2 1/2	BNH0068	4
77	RUBBER FOOT FOR 6 X 4 1/4 PLATE	BNH1647	5
78	RUBBER GROMMET 3/4" ID	BNH0401	2
79	SHOULDER BOLT ALLOY 3/8 X 3/4	BNH0718	1
80	SINGLE STRAND CONNECTING LINK #40	BNH0066	1
81	SNAP LINK Z/P 8MM X 80MM	BNH0065	6
82	SOCKET SET SCREW ALLOY 10-30 X 1/8	BNH0473	2
83	SOCKET SET SCREW ALLOY 3/8-16 X 1/2	BNH0474	1
84	SPLIT LOCK WASHER B/O 1/2"	BNH0653	2
85	SPLIT LOCK WASHER B/O 3/8"	BNH0658	11
86	7/8 Rd X 1 5/8 Link 1/8 Cable	BNH4231	6
87	SUPER LUBE TEFLON LUBRICANT 82340	BNH0704	2
88	TFI EMBLEM 4 HIGH X 4.23 WIDE BLUE AND CHROME	BNH4305	1
89	U-STYLE TAPPED HOLE NUT 1/4-20	BNH0708	4
91	HEX HEAD CAP SCREW GR-5 B/O 3/8-16 X 4 1/4	BNH0317	4
92	CONTOUR ERGO HANDLE SHORT STRAP	BNH2739	2
93	**WEIGHT STACK SPACER 5" (USED ONLY WITH 150 LB)**	**UP5238**	**2**
94	Label-INSPECTIONS Recommended Inspection…	BNH2922	1
95	Label SCHEDULE Replacement Parts...	BNH2957	1
96	Label-DANGER Use this equipment ONLY...	BNH2903	1
97	Label-DANGER Do Not Pull or Perform...	BNH3112	2
98	Label- CAUTION Adjust Leveler	BNH3119	2
99	LABEL - SERIAL NUMBER - CLASS S	BNH5186	1
100	Label-Patent D626,609S	BNH3115	2
101	Label-Patent D606,135S	BNH3116	1
102	ALERT Sign for Customer 8 1/2 x 11	BNH3015	1
103	RUBBER FLAT TUBE .94 ID X .115 WALL X 19	BNH2485	2
104	Label CAUTION CHECK Pull-pin is fully... 1 1/2 x 1 3/8	BNH2912	1
105	Label WARNING ATTENTION USERS!...	BNH2911	1
107	BRONZE BUSHING 1/2 X 7/8 X 1/8	BNH0528	2

Inspection / Maintenance

Perform regular maintenance (see Inspection Label). Pay special attention to areas most susceptible to wear and tear. TuffStuff Fitness recommends you maintain a service contract with a TuffStuff Fitness Authorized Dealer or a Professional Service Company approved by TuffStuff Fitness. Keep a service log of all maintenance and repair activities. Extra copies can be downloaded from our website.

INSPECTIONS

Recommended Inspection Replace all parts at first signs of wear or damage.	DAILY	WEEKLY	MONTHLY	6-MONTH	YEARLY
INSPECT: Links, pull-pins, snap locks, swivels, connectors, selector pin, and welded-joints.	X				
CLEAN: Upholstery with lanolin-base cleaner. Do not use Windex.	X				
INSPECT: Cables, Belts and tension (adjust if needed).	X				
INSPECT: All labels		X			
INSPECT: All nuts and bolts (tighten if needed).		X			
INSPECT: Accessory bars, handles, rubber grips.		X			
INSPECT: All anti-skid surfaces.		X			
CLEAN & LUBRICATE: Clean guide rods with Super Lube® spray lubricant and lubricate with Super Lube® (PTFE) grease.			X		
LUBRICATE: Seat sleeves, pull-pin sliding mechanism, bushings and linear bearings.			X		
CLEAN & WAX: All powder-coat finishes.				X	
REPLACE: Cables & connecting parts.					X

Use only genuine TuffStuff replacement parts. Failure to do so will void warranty and could result in serious injury or death.

TuffStuff Fitness Equipment Inc.
Chino, CA 91710, USA
www.tuffstuffitness.com BNH2922

INSPECTION / MAINTENANCE RECORDS

DATE	REPLACEMENT	REPAIRS	INSPECTED BY

WARRANTY REPAIRS

DATE	REPLACEMENT	REPAIRS	INSPECTED BY

WARNING:

THE FOLLOWING CONDITIONS MAY INDICATE A WORN CABLE. REPLACE IMMEDIATELY.

"NECKING", STRECHED CABLE COVERING

A CRACK IN THE CABLE COVER

A TEAR IN THE CABLE COVER

A BREAK ON THE CABLE

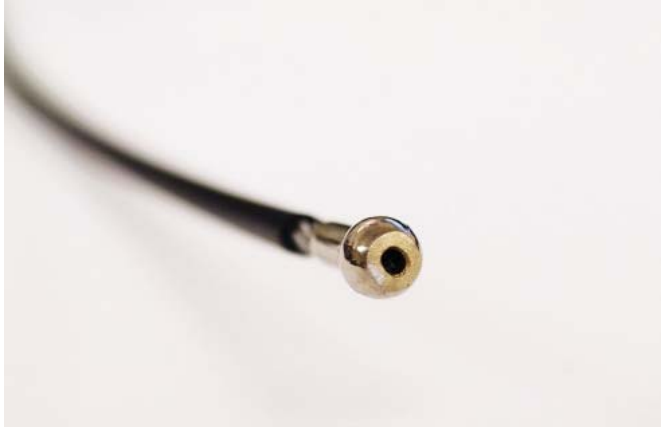

CABLE END SLIPPING OUT

IMPORTANT NOTE:

DAMAGED OR WORNED CABLE (AS SHOWN ABOVE) MAY DAMAGE THE PULLEY(S). YOU MUST INSPECT THE PULLEYS AT THIS TIME FOR WEAR AND TEAR. REPLACE IF NEEDED.

34

⚠ WARNING

Serious injury or death can occur if these rules and precautions are not observed:

1. **Read and Understand** Owner's Manual (if available) and all DANGER, WARNING and CAUTION labels before using this equipment. If you still need help, seek assistance from floor personnel.
2. Obtain a **medical exam** before beginning any exercise program.
3. **Stop exercising** if you feel faint or dizzy. Consult a physician if you are experiencing pain.
4. **Inspect equipment** prior to use for wear and tear, loose fittings, worn or frayed cables/belts and frame welds. Do not use if it appears damaged or inoperable.
5. **Do not attempt to fix** or free any jammed parts by yourself. Seek assistance from floor personnel.
6. **Use this equipment only for the intended use** and for exercise(s) shown in the exercise label.
7. Keep body, clothing and hair **clear from all moving parts.**
8. **Children must not be allowed** near this machine. Teenager must be supervised.
9. **Make sure the selector pin** is completely inserted. Use only the selector pin provided by the manufacturer. If difficulty inserting the pin, seek assistance from floor personnel.
10. **Never pin the weights in an elevated position.** Do not use the machine if found in this condition. Inform floor personnel immediately.
11. **Do not modify selectorized weight stack** with any add-on incremental weights or dumbbells, except those with standard factory installed.
12. **Do not remove labels** affixed to the machine. Replace if damaged.

TuffStuff Fitness Equipment Inc.
Chino, CA 91710, USA
BNH2939

94

INSPECTIONS

Recommended Inspection Replace all parts at first signs of wear or damage.	DAILY	WEEKLY	MONTHLY	6-MONTH	YEARLY
INSPECT: Links, pull-pins, snap locks, swivels, connectors, selector pin, and welded-joints.	X				
CLEAN: Upholstery with lanolin-base cleaner. Do not use Windex.	X				
INSPECT: Cables, Belts and tension (adjust if needed).	X				
INSPECT: All labels		X			
INSPECT: All nuts and bolts (tighten if needed).		X			
INSPECT: Accessory bars, handles, rubber grips.		X			
INSPECT: All anti-skid surfaces.		X			
CLEAN & LUBRICATE: Clean guide rods with Super Lube® spray lubricant and lubricate with Super Lube® (PTFE) grease.			X		
LUBRICATE: Seat sleeves, pull-pin sliding mechanism, bushings and linear bearings.			X		
CLEAN & WAX: All powder-coat finishes.				X	
REPLACE: Cables & connecting parts.					X

Use only genuine TuffStuff replacement parts. Failure to do so will void warranty and could result in serious injury or death.

TuffStuff Fitness Equipment Inc.
Chino, CA 91710, USA
www.tuffstuffitness.com
BNH2922

95

SCHEDULE
Replacement Parts

Recommended TuffStuff Parts (replace or as needed)	9-MONTH	12-MONTH	15-MONTH	18-MONTH
Upholstery	X			
Foam Rolls	X			
Cables		X		
Rubber Grips		X		
Nylon Handles			X	
Pull-Pins			X	
Plastic Guides			X	
Weight Selector Pin			X	
Abdominal Strap			X	
Adj. Release Handle				X
Black Caster Wheels				X
Buckle Seat/Belt				X
Labels (as needed)				

Use only TuffStuff replacement parts when servicing. Failure to do so will void warranty on product and could result in personal injury.

TuffStuff Fitness Equipment Inc.
13971 Norton Avenue
Chino, CA 91710
BNH2957

97

⚠ DANGER

DO NOT pull or perform any exercises to the sides of the machine.

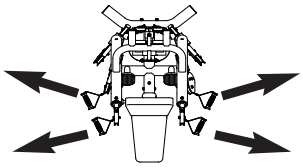

Excessive pulling or force can cause the machine to tip over, and may results in serious injuries or death.

BNH3112

37

IMPORTANT

For smooth performance, clean guide rods with Super Lube® spray lubricant and lubricate with Super Lube® (PTFE) grease.
BNH2925

38

IMPORTANT

CHECK CABLES

Be sure cables run between the pulleys and working properly.
BNH3113

96

⚠ DANGER

Use this equipment ONLY for its intended purpose.

If you are unfamiliar with the equipment or procedure, refer to your Owner's Manual or call TuffStuff at 888-884-8275.

Failure to comply could result in serious injury or death.
BNH2903

40

⚠ WARNING

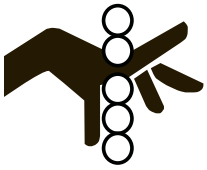

Keep body, hands and fingers clear of all moving parts
BNH2908

39

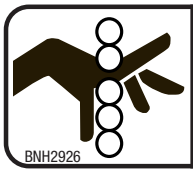

BNH2926

⚠ WARNING

Keep body, hands and fingers clear of all moving parts.

98

⚠ CAUTION

Adjust LEVELER to the floor surface for stability.
BNH3119

Carefully read ALL DANGER, WARNING & CAUTION labels posted on the machine

36

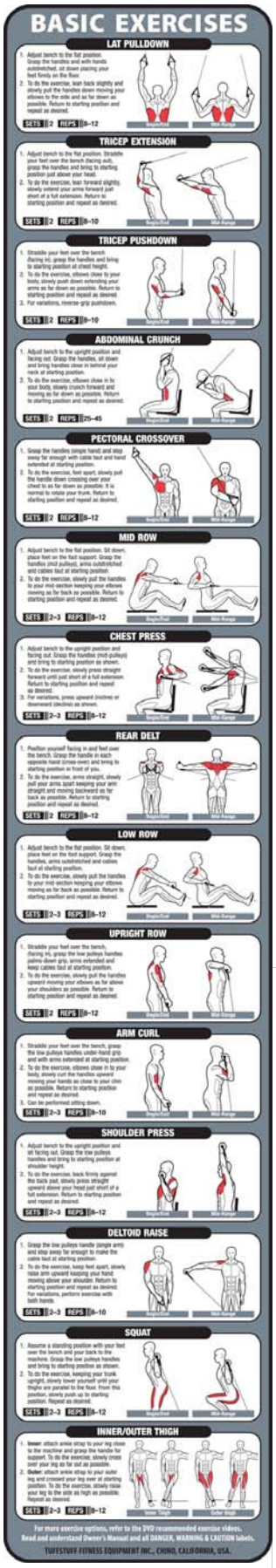

41

TOP PLATE 10 LBS.	4.5 KGS.
20 LBS.	9.0 KGS.
30 LBS.	13.6 KGS.
40 LBS.	18.1 KGS.
50 LBS.	22.7 KGS.
60 LBS.	27.2 KGS.
70 LBS.	31.8 KGS.
80 LBS.	36.3 KGS.
90 LBS.	40.8 KGS.
100 LBS.	45.4 KGS.
110 LBS.	49.9 KGS.
120 LBS.	54.4 KGS.
130 LBS.	59.0 KGS.
140 LBS.	63.5 KGS.
150 LBS.	68.0 KGS.
160 LBS.	72.6 KGS.
170 LBS.	77.1 KGS.
180 LBS.	81.6 KGS.
190 LBS.	86.2 KGS.
200 LBS.	90.7 KGS.

99

TUFFSTUFF FITNESS INTERNATIONAL
www.tuffstuffitness.com
TEL: 909-629-1600 | 888-884-8275 (USA ONLY)
EN NORM 20957 CLASS: "S"
MAXIMUM USER WEIGHT: 155 kg
MODEL
SERIAL #
BNH 5186

101

U.S. Pat. No. D606,135 S

100

U.S. Pat. No. D626,609 S

88

TUFFSTUFF FITNESS INTERNATIONAL

35

DANGER

TIGHTEN this retaining nut before use.
BNH2902

33

IMPORTANT

ADJUST
Cable Tension Here
BNH2924

104

CAUTION

CHECK
Pull-pin is fully engaged in the hole before use.
BNH2912

105

WARNING

ATTENTION USERS!
Moving parts – BE AWARE of your body, hands and fingers when making the adjustment.
BNH2911

102

BE ALERT!

THE FITNESS EQUIPMENT YOU HAVE JUST PURCHASED PRESENTS HAZARDS WHICH, IF NOT AVOIDED, COULD CAUSE SERIOUS INJURY OR DEATH.

Prior to using the equipment, READ the OWNER'S MANUAL thoroughly, all danger, warning & caution labels and instruction placards affixed to the machine.

If you are unsure on how to use the equipment, seek the assistance of a certified training instructor, TuffStuff authorized dealer or TuffStuff customer service personnel.

Immediately report any piece of equipment that is not functioning properly. DO NOT ATTEMPT to use or fix any piece of equipment yourself. Contact TuffStuff immediately.

ASTM F1749-96 TUFFSTUFF FITNESS EQUIPMENT INC. CHINO, CA 91710
BNH3015

It is extremely important that the **BE ALERT!** 102 Sign shown to the left be installed in plain view of the unit.

You should have received it along with this Owners Manual. If you did not receive this Sign with your order, you can obtain one at no cost to you from TuffStuff Fitness by contacting our service department at:

1 (888) 884-8275
service@tuffstuff.net
service1@tuffstuff.net

SPT-6X Label Placement

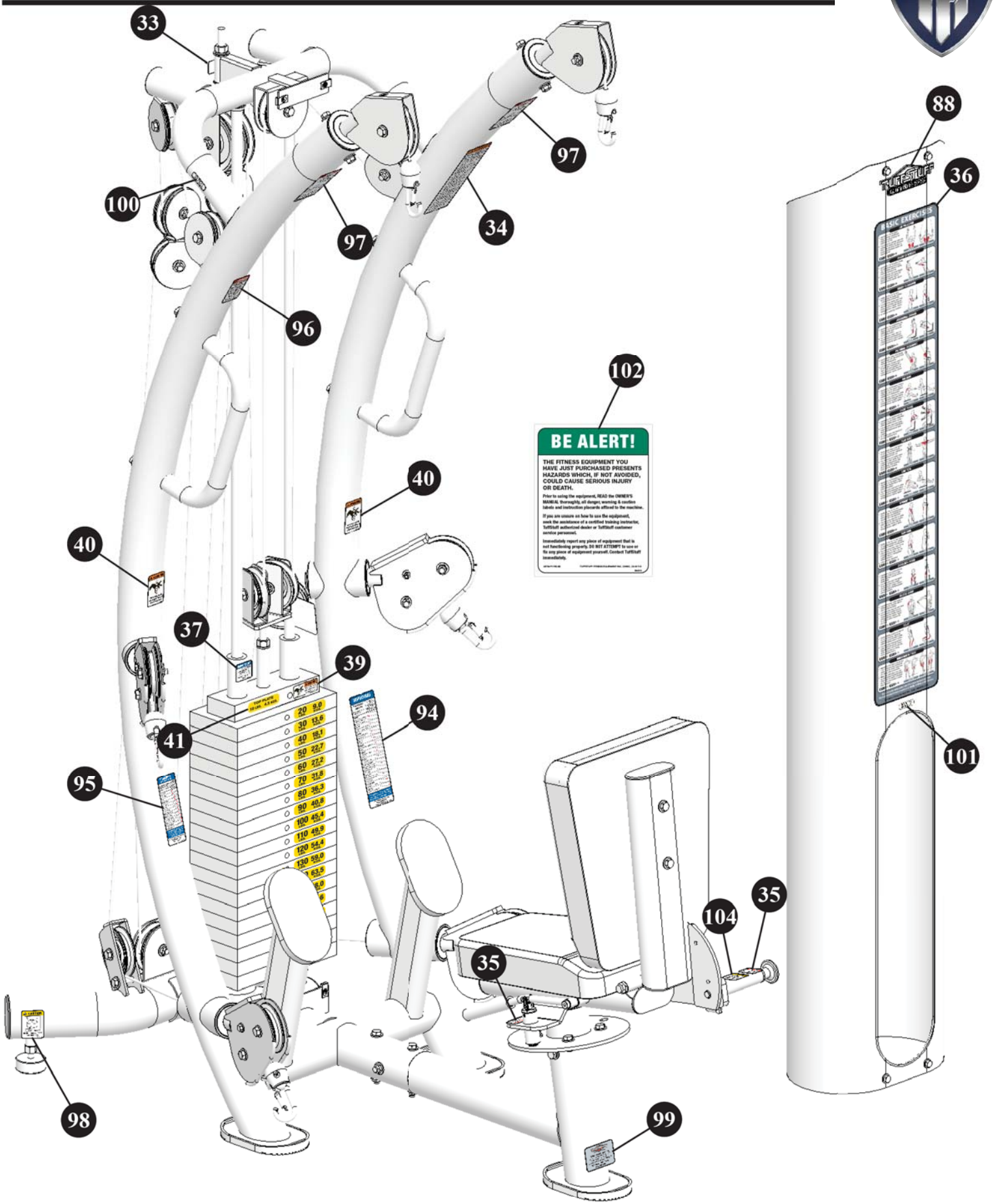

SPT-6X Label Placement

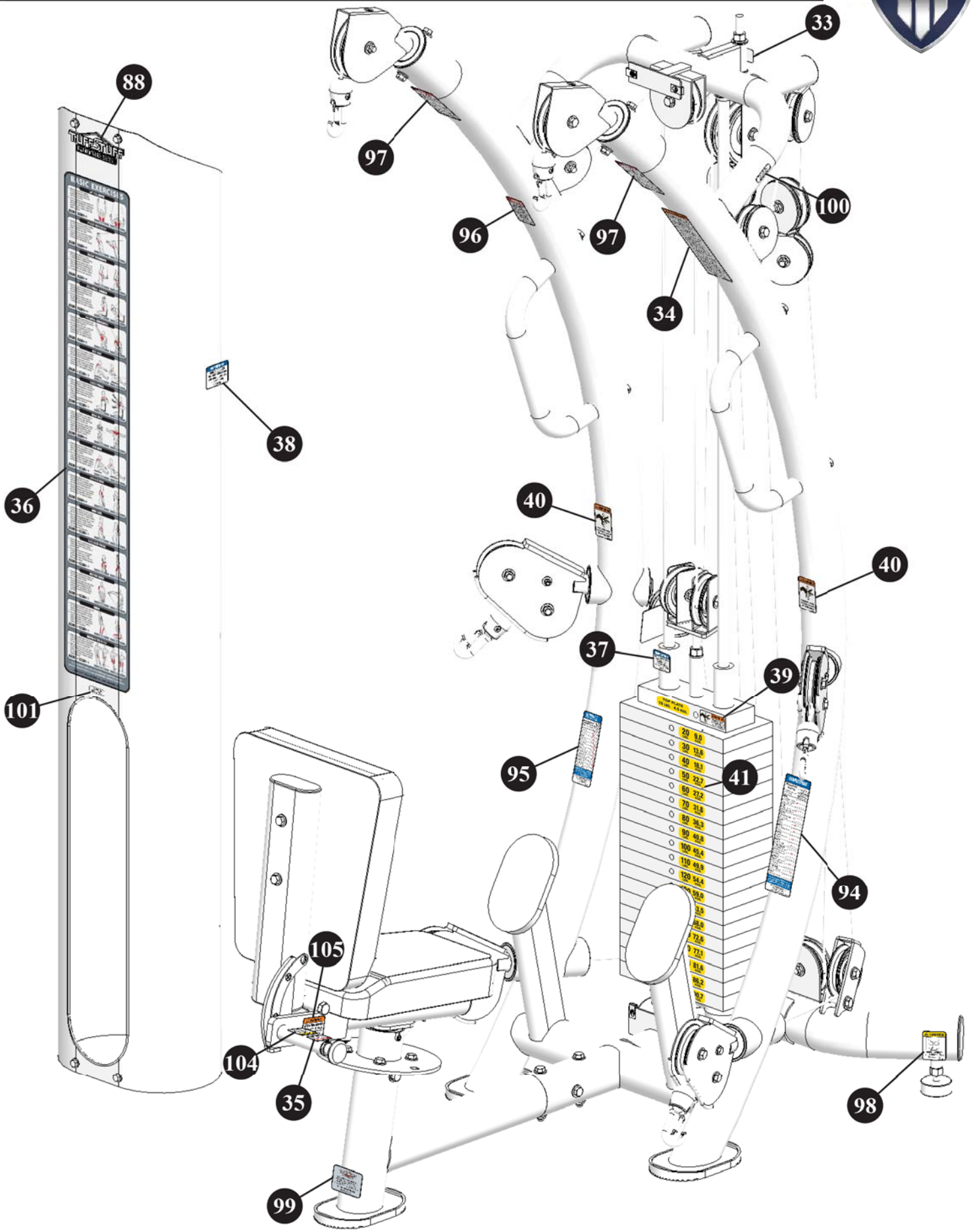

Notes

N o t e s

IMPORTANT: KEEP THIS OWNERS MANUAL FOR FUTURE REFERENCE

HOME LIFETIME WARRANTY

A seal of confidence and quality since 1971.

Tuffstuff warrants to the origional purchaser that TuffStuff equiptment will be free from defects in material and workmanship. TuffStuff's exclusive HOME LIFETIME WARRANTY coverage extends for the life of the product while owned by the origional purchaser, and used only in a home or residential environment.

This warranty does not cover:

A. TuffStuff products sold for and used in a commercial or institutional environment.

B. Any damage, failure or loss caused by accident, misuse, neglect, abuse, improper assembly, improper maintenance, or failure to follow instructions or warnings in the owner's manual and warning labels posted on the machines.

C. Use of the product in a manner for which it was not designed.

D. It excludes expendable parts such as paint and finish.

E. Original product that is altered, or the use of replacement parts and components of another manufacturer.

F. VALID ONLY if the Product is assembled and installed according to the instructions provided in the Owner's manual.

The obligation of TuffStuff under this warranty is limited to repairing or replacing warranted defective parts as TuffStuff may elect, at TuffStuff's facility in Chino, California without charge to the purchaser. Purchaser is responsible for installation of repaired or replaced parts, and all transportation and insurance costs on returned or replaced equipment to and from TuffStuff's facility in Chino.

THE FOREGOING SHALL CONSTITUTE THE SOLE REMEDY OF THE PURCHASER AND THE SOLE LIABILITY OF TUFFSTUFF WITH REGARD TO WARRANTY, WHETHER EXPRESS OR IMPLIED BY OPERATION OF LAW OR OTHERWISE, INCLUDING BUT NOT LIMITED TO ANY IMPLIED WARRANTIES OF MERCHANTABILITY OR FITNESS. TUFFSTUFF SHALL IN NO EVENT BE LIABLE FOR INCIDENTAL OR CONSEQUENTIAL LOSSES, DAMAGES, OR EXPENSES IN CONNECTIONS WITH EXERCISE PRODUCTS. TUFFSTUFF'S LIABILITY HEREUNDER IS EXPRESSLY LIMITED TO THE REPAIRS OR REPLACEMENTS OF WARRANTED DEFECTIVE PARTS.

This written warranty is the final, complete and exclusive agreement of the parties with respect to the quality or performance of the equipment and no action for breach of this written warranty or any implied warranty shall be commenced more than one (1) year after the accrual of the cause of action. No modification of this warranty or waiver of its terms shall be binding on either party unless approved in writing by an authorized representative of the party. Contact TuffStuff Fitness Equipment Inc. at 13971 Norton Avenue, Chino, CA 91710, before returning any defective equipment.

This warranty gives you specific legal rights and you may also have other rights, which may vary from state to state.

SERIAL # _____

Write your Serial number here for future reference

_____

Purchase Date

TuffStuff Fitness Equipment Inc.
13971 Norton Avenue, Chino, CA 91710, USA
Phone: 909-629-1600 Fax: 909-629-4967
service@tuffstuff.net service1@tuffstuff.net
www.tuffstuffitness.com