TUFFSTUFF

AMERICA'S PREMIER EXERCISE EQUIPMENT

OWNER'S MANUAL

Apollo 7000 SERIES

MULTI PRESS STATION

AP-71MP Rev0
Revision Date 9-17-09

About the MULTI PRESS STATION

Congratulations on your new purchase of the **MULTI PRESS STATION**. We hope you are completely satisfied with this product and wish you many years of enjoyment.

Tuff Stuff Equipment

This Tuffstuff product has been built to precise quality standards and has been carefully packaged to ensure that damage will not occur during shipment. The Home Lifetime Warranty and signature indicating final inspection has been conducted by our line foreman, is an expression of our confidence in the completeness, the materials, and workmanship of this product.

Warranty

SEE A COPY OF WARRANTY ON BACK PAGE.

Registration Card

To avoid unnecessary delays in warranty service and to insure that a permanent record of your purchase is on file with our factory, be sure to complete the warranty registration card and send it to TuffStuff Fitness Equipment today.

Specifications

1. Maximum Wt. Capacity	- 200 lbs.
2. Total Machine Weight	- 483 lbs.
3. Footprint (LWH)	- Height is 84". For footprints refer to the Center Post/Rear Post Assembly Manuals.

Note: Due to continuing product improvements, specifications and designs are subject to change without notice.

Prior to the Assembly of the MULTI PRESS STATION

1. We advise you to consult your local Tuff Stuff retailer if you should have a question or problem regarding the proper assembly of this unit.

Tool Requirements

1. One 7/8" combination wrench
2. Two 3/4" combination wrench
3. One 9/16" combination wrench
4. One 1/2" combination wrench
5. One 7/16" combination wrench
6. One adjustable wrench
7. One ratchet
8. One 3/4" socket
9. One 9/16" socket
10. One rubber mallet
11. Windex or household glass cleaner
12. Measuring tape
13. Utility knife
14. The hex key alloy set included in the Center Post/Rear Post box.

Hardware Measurement Diagram

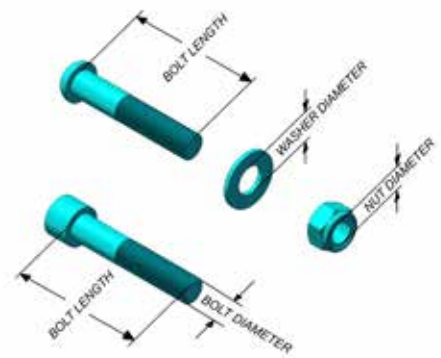

Safety Precautions

Safety First

Regardless of how enthusiastic you may be about getting on your equipment and exercising, take the time to ensure that your safety is not jeopardized. A moment's lack of attention can result in an accident, as can failure to observe certain simple safety precautions.

1. Read, study and understand the Assembly Instructions and all the warning labels on this product. Furthermore, it is recommended to familiarize yourself and others with the proper operation and workout recommendations for this Tuff Stuff product prior to use.

2. It is imperative that you retain this Assembly Instructions and be sure all warning labels are legible and intact. Replacement Assembly Instructions and labels are available from your local Tuff Stuff retailer.

3. Consult with your physician before beginning any exercise program.

4. Frayed or worn cables can be dangerous and may cause injury. Periodically check the cable for any indication of wear.

5. Use proper discretion when children are present.

6. Keep hands, limbs, loose clothing and long hair well out of the way of moving parts.

7. Do not attempt to lift more weight than you can control safely.

8. Inspect the Unit for any sign of wear on parts, hardware becoming loose or cracks on welds. If a problem is found **do not use or allow the machine to be used** until the defective part is repaired or replaced.

IMPORTANT ASSEMBLY INSTRUCTION NOTE.....4

FIRST STEPS FOR A SINGLE STATION.....5

MULTIPLE STATION ASSEMBLY STEPS.....7

LAT CABLE.....12

TENSION CABLE.....14

ABDOMINAL CABLE.....15

EXPLODED VIEW.....19

PARTS LIST.....20

MAINTENANCE.....21

INSTRUCTIONS FOR A SINGLE STATION ASSEMBLY ONLY:

FOR STEPS 1 AND 2 YOU WILL NEED SOME HARDWARE THAT IS PROVIDED IN THE AP-70RP BOX. ONCE YOU COMPLETE STEPS 1 AND 2 SKIP TO STEP 5 TO RESUME INSTALLATION.

INSTRUCTIONS FOR A MULTI STATION ASSEMBLY ONLY:

BEGIN ASSEMBLY IN STEP 3. FOR STEPS 3 AND 4 YOU WILL NEED SOME HARWARE THAT IS PROVIDED IN THE AP-70CP BOX.

Assembly List		
Item #	**Description**	**Qty.**
B1	**REAR POST**	**1**
B7	FLAT WASHER SAE N/P 3/8”	4
B8	FLAT WASHER N/P 3/8 ID X 1 1/2 OD X 3/16	4
B9	NYLON INSERT LOCK NUT N/P 3/8-16	4
B11	SOCKET CAP SCREW GR-8 N/P 3/8-16 X 3	4
6	**BASE FRAME**	**1**
38	BLACK NYLON PULLEY 3/8 X 1 X 3 1/2	4
46	BUTTON HEAD SCREW GR-8 N/P 3/8-16 X 1 3/4	2
50	BUTTON HEAD SCREW GR-8 N/P 3/8-16 X 4 1/2	2
66	FLAT WASHER SAE N/P 3/8”	8
77	NYLON INSERT LOCK NUT N/P 3/8-16	4
81	PLASTIC PULLEY COVER	1

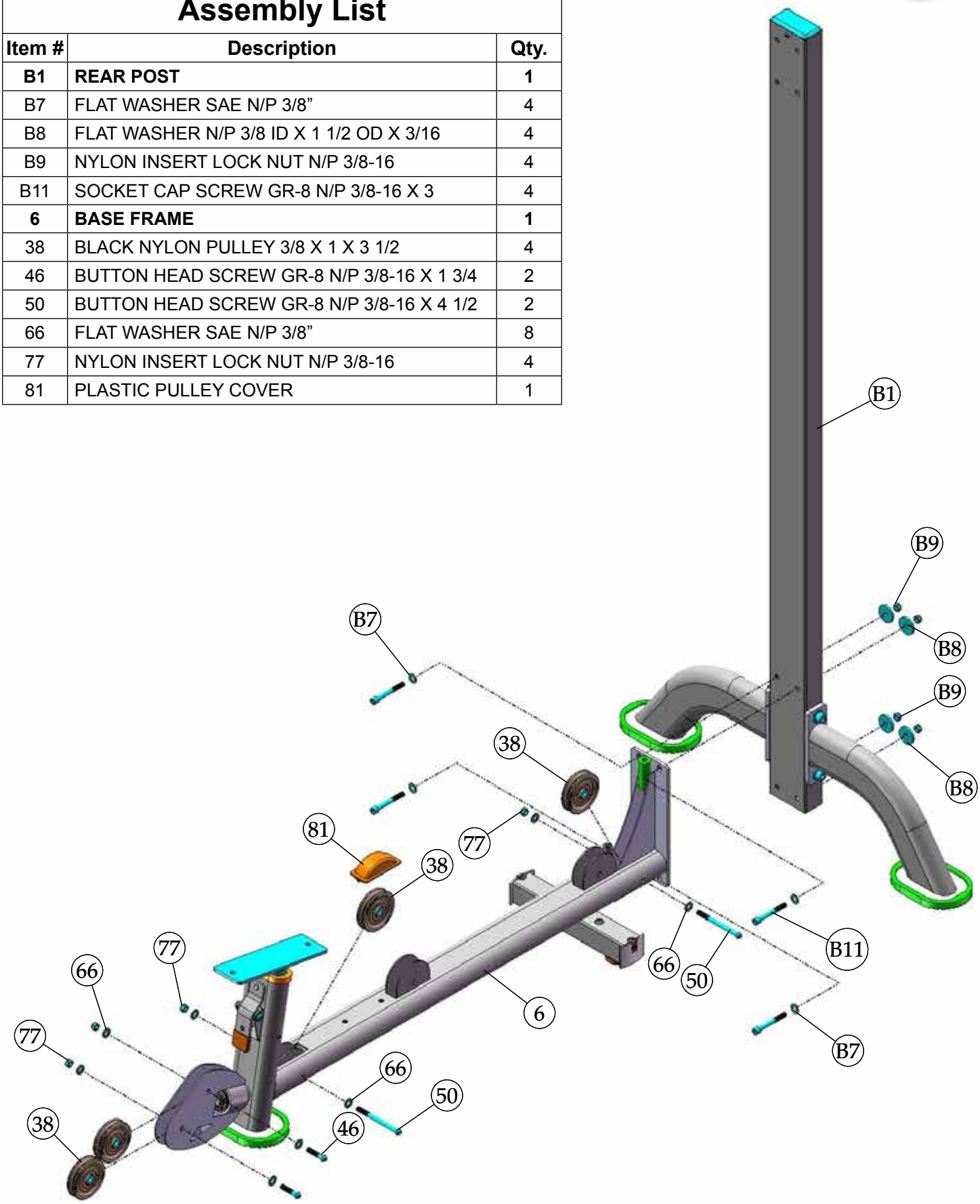

STEP 2

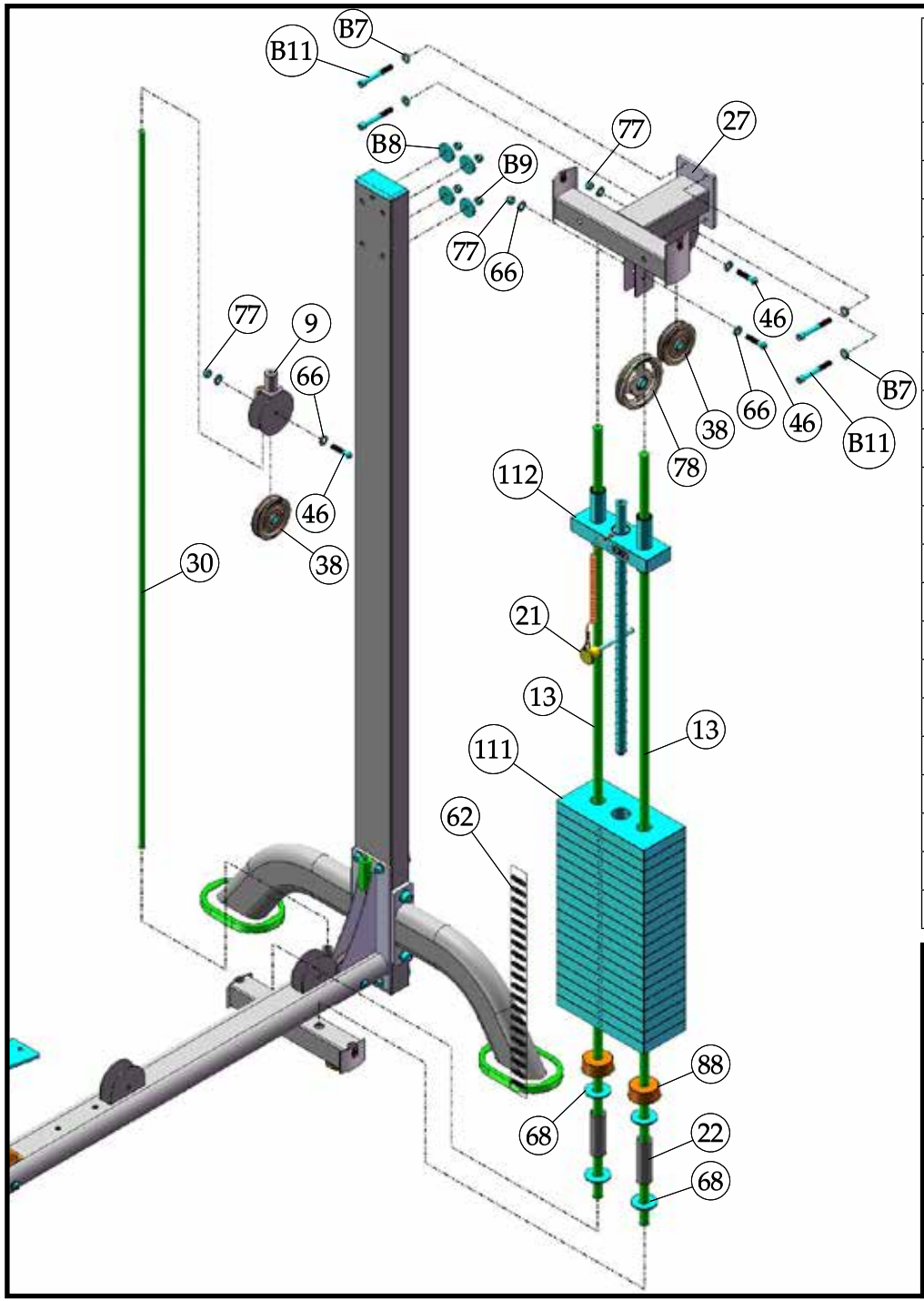

Assembly List

Item #	Description	Qty.
B7	FLAT WASHER SAE N/P 3/8”	4
B8	FLAT WASHER N/P 3/8 ID X 1 1/2 OD X 3/16	4
B9	NYLON INSERT LOCK NUT N/P 3/8-16	4
B11	SOCKET CAP SCREW GR-8 N/P 3/8-16 X 3	4
9	FLOATING PULLEY BRACKET (3 1/2 PULLEY)	1
13	**GUIDE RODS**	**2**
21	**SELECTOR PIN W/COIL 3/8 X 4 GOLD KNOB**	**1**
22	**SPACER 1 1/4 OD X 1 ID X 3 3/4**	**2**
27	**TOP GUIDE ROD HOUSING**	**1**
30	**GUIDE ROD 1/2 RD X 66 3/4**	**1**
38	BLACK NYLON PULLEY 3/8 X 1 X 3 1/2	2
46	BUTTON HEAD SCREW GR-8 N/P 3/8-16 X 1 3/4	3
62	DECAL-WEIGHT NUMBERS REF TP-10 (200 lbs)	1
66	FLAT WASHER SAE N/P 3/8”	6
68	FLAT WASHER N/P 3/4 X 2	4
77	NYLON INSERT LOCK NUT N/P 3/8-16	3
78	NYLON PULLEY 3/8 X 1 X 4 1/2 BLACK	1
88	RUBBER DONUT 3/4 X 2 1/2	2
99	SOCKET SET SCREW N/P 10-32 X 1/8	1
111	10 LB STEEL WEIGHT PLATE BLACK 4 9/16 X 9 7/16	19
112	10 LB TOP PLATE W/ADJ SLTR BAR 19 BLK WTS	1

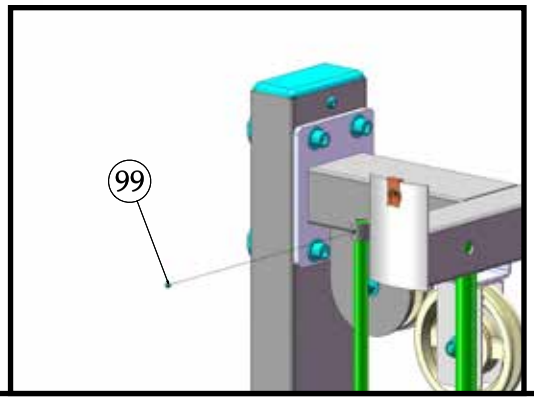

Assembly List		
Item #	**Description**	**Qty.**
A1	**CENTER POST**	**1**
A7	SOCKET CAP SCREW GR-8 N/P 3/8-16 X 1	4
A8	FLAT WASHER SAE N/P 3/8”	4
A10	SPLIT LOCK WASHER N/P 3/8”	4
6	**BASE FRAME**	**1**
38	BLACK NYLON PULLEY 3/8 X 1 X 3 1/2	4
46	BUTTON HEAD SCREW GR-8 N/P 3/8-16 X 1 3/4	2
50	BUTTON HEAD SCREW GR-8 N/P 3/8-16 X 4 1/2	2
66	FLAT WASHER SAE N/P 3/8”	8
77	NYLON INSERT LOCK NUT N/P 3/8-16	4
81	PLASTIC PULLEY COVER	1

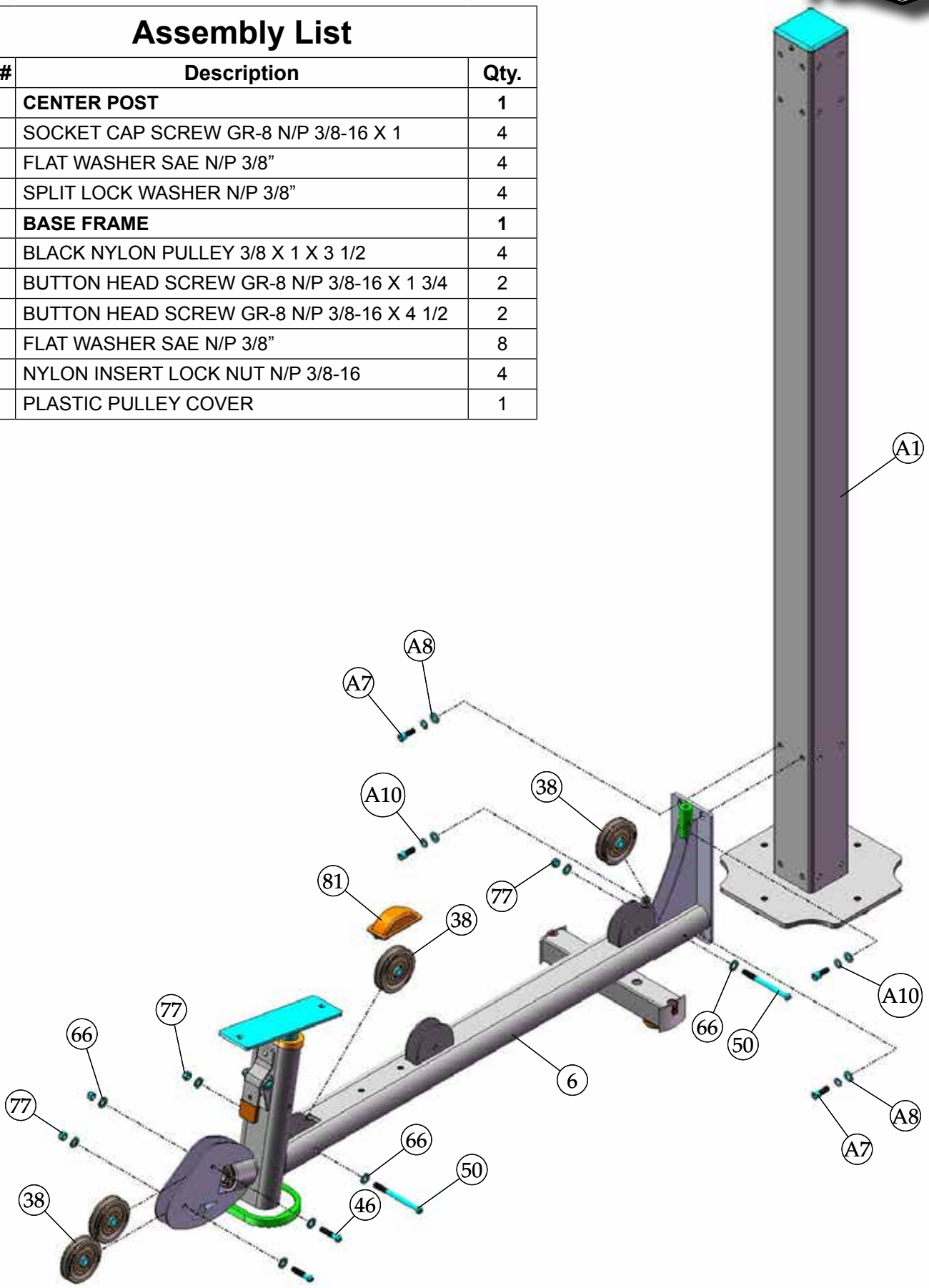

STEP 4

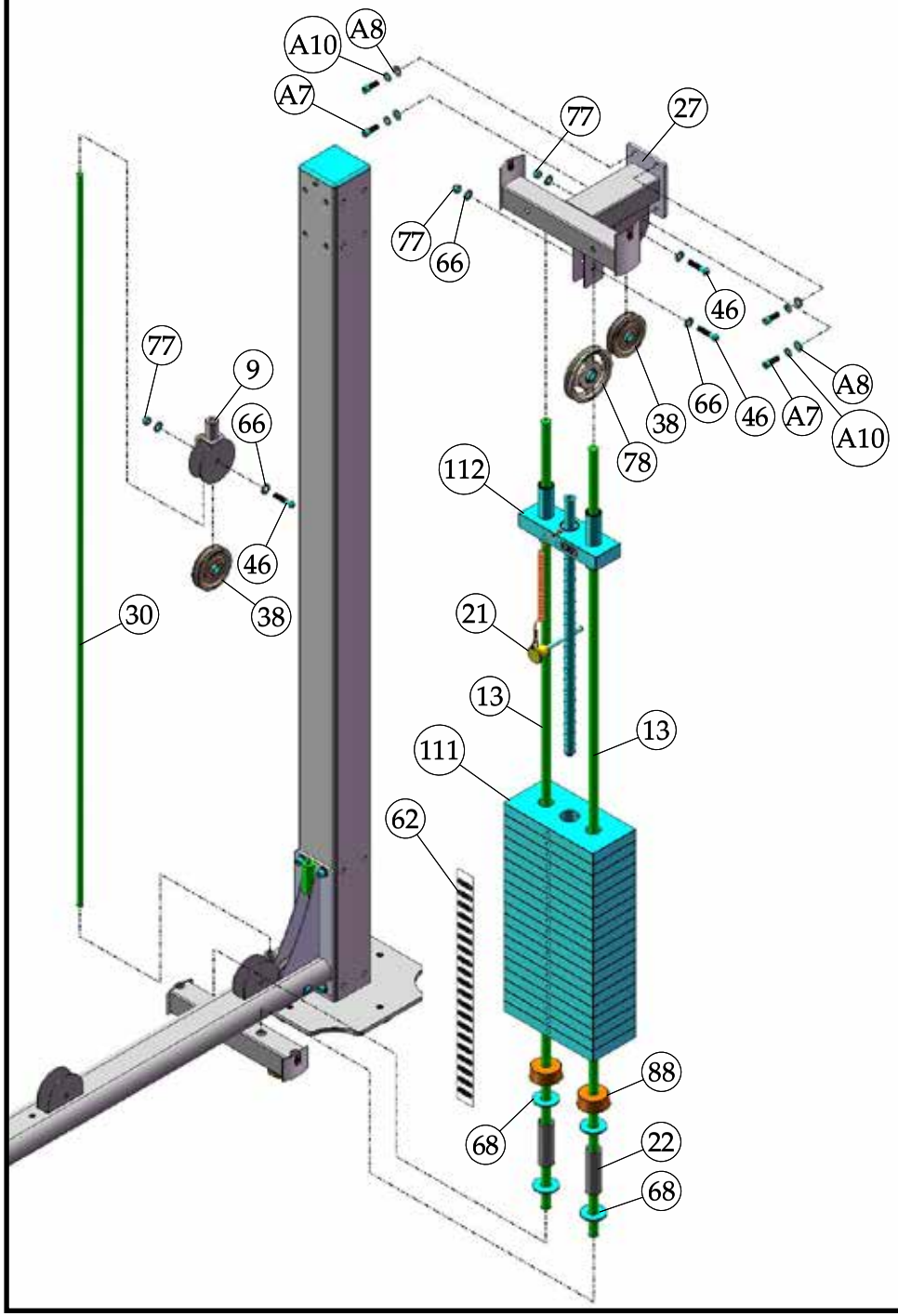

Assembly List

Item #	Description	Qty.
A7	SOCKET CAP SCREW GR-8 N/P 3/8-16 X 1	4
A8	FLAT WASHER SAE N/P 3/8”	4
A10	SPLIT LOCK WASHER N/P 3/8”	4
9	FLOATING PULLEY BRACKET (3 1/2 PULLEY)	1
13	**GUIDE RODS**	**2**
21	**SELECTOR PIN W/COIL 3/8 X 4 GOLD KNOB**	**1**
22	**SPACER 1 1/4 OD X 1 ID X 3 3/4**	**2**
27	**TOP GUIDE ROD HOUSING**	**1**
30	**GUIDE ROD 1/2 RD X 66 3/4**	**1**
38	BLACK NYLON PULLEY 3/8 X 1 X 3 1/2	2
46	BUTTON HEAD SCREW GR-8 N/P 3/8-16 X 1 3/4	3
62	DECAL-WEIGHT NUMBERS REF TP-10 (200 lbs)	1
66	FLAT WASHER SAE N/P 3/8”	6
68	FLAT WASHER N/P 3/4 X 2	4
77	NYLON INSERT LOCK NUT N/P 3/8-16	3
78	NYLON PULLEY 3/8 X 1 X 4 1/2 BLACK	1
88	RUBBER DONUT 3/4 X 2 1/2	2
99	SOCKET SET SCREW N/P 10-32 X 1/8	1
111	10 LB STEEL WEIGHT PLATE BLACK 4 9/16 X 9 7/16	19
112	10 LB TOP PLATE W/ADJ SLTR BAR 19 BLK WTS	1

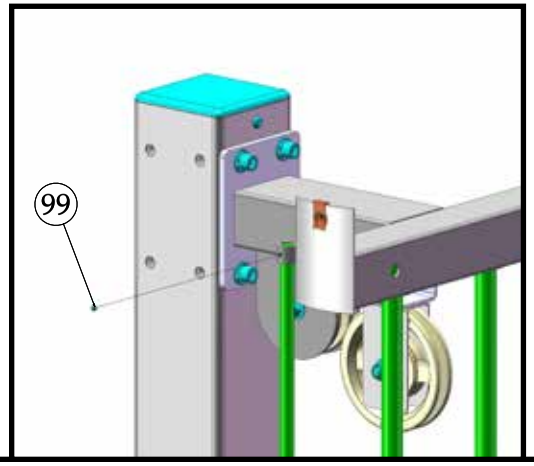

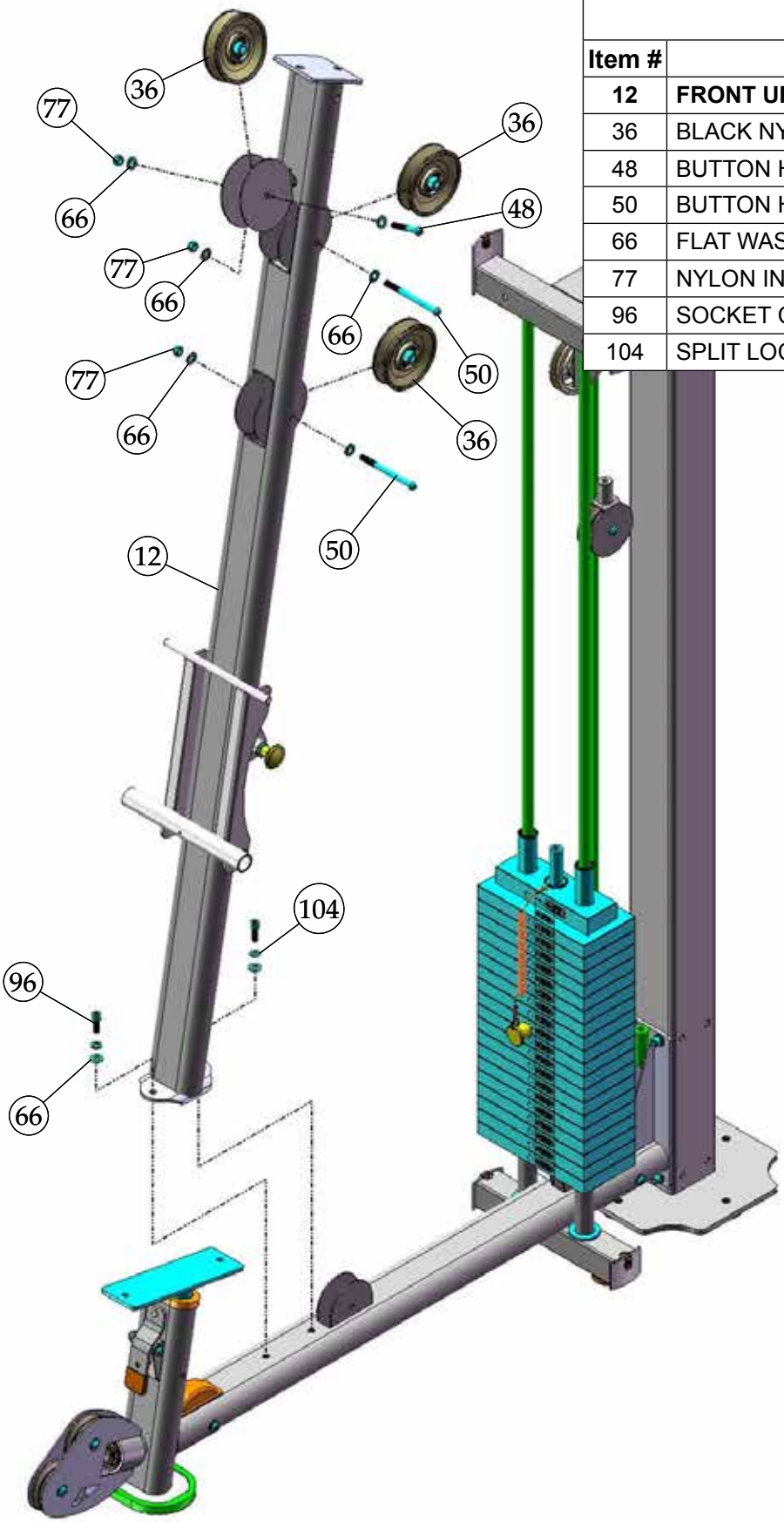

Assembly List

Item #	Description	Qty.
12	**FRONT UPRIGHT**	**1**
36	BLACK NYLON PULLEY 3/8 X 1 1/2 X 4 1/2	3
48	BUTTON HEAD SCREW GR-8 N/P 3/8-16 X 2 1/4	1
50	BUTTON HEAD SCREW GR-8 N/P 3/8-16 X 4 1/2	2
66	FLAT WASHER SAE N/P 3/8”	8
77	NYLON INSERT LOCK NUT N/P 3/8-16	3
96	SOCKET CAP SCREW GR-8 N/P 3/8-16 X 1 1/4	2
104	SPLIT LOCK WASHER N/P 3/8”	2

Assembly List

Item #	Description	Qty.
25	**TOP FRAME**	**1**
29	**CABLE RETAINER BRACKET 3 1/2 PULLEY**	**1**
38	BLACK NYLON PULLEY 3/8 X 1 X 3 1/2	1
49	BUTTON HEAD SCREW GR-8 N/P 3/8-16 X 2 3/4	1
51	BUTTON HEAD SCREW GR-8 N/P 3/8-16 X 5	4
66	FLAT WASHER SAE N/P 3/8”	14
69	FLAT WASHER N/P 3/8 ID X 1 1/2 OD X 3/16	2
77	NYLON INSERT LOCK NUT N/P 3/8-16	9
78	NYLON PULLEY 3/8 X 1 X 4 1/2 BLACK	2
82	PLASTIC STOPPER	1
97	SOCKET CAP SCREW GR-8 N/P 3/8-16 X 3	4
114	FLANGED SPACER N/P 0.406 X 0.63 X 1.7186 (1.625) X 0.079	2

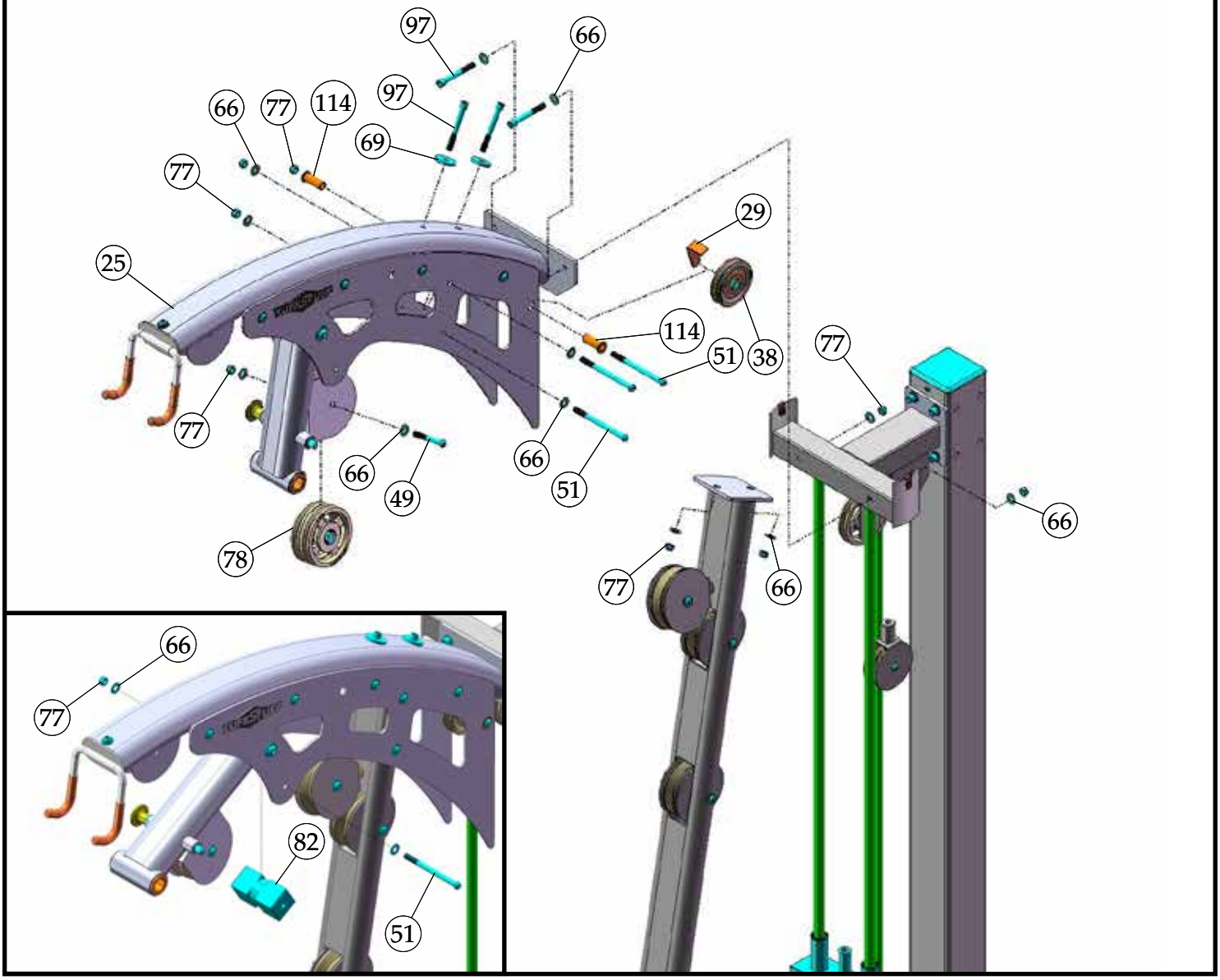

Assembly List

Item #	Description	Qty.
16	**PIVOT AXLE 1 X 5 3/4**	**1**
17	**PRESS BAR**	**1**
69	FLAT WASHER N/P 3/8 ID X 1 1/2 OD X 3/16	2
95	SOCKET CAP SCREW GR-8 N/P 1/4-28 X 3/4	4
100	SPLIT COLLAR 1” (PAINTED)	2
104	SPLIT LOCK WASHER N/P 3/8”	2
119	SOCKET CAP SCREW GR-8 N/P 3/8-16 X 1	2

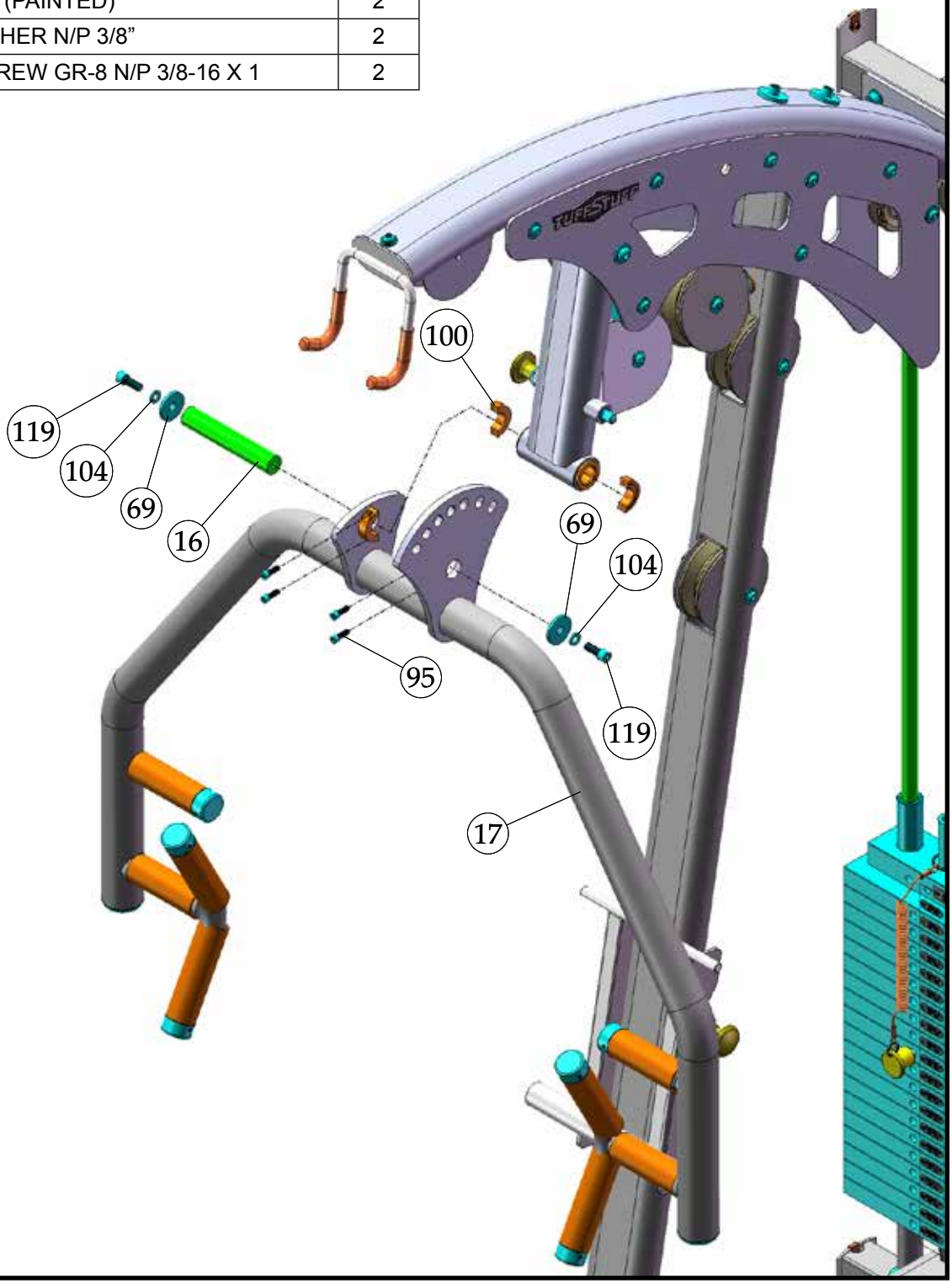

STEP 8 LAT CABLE

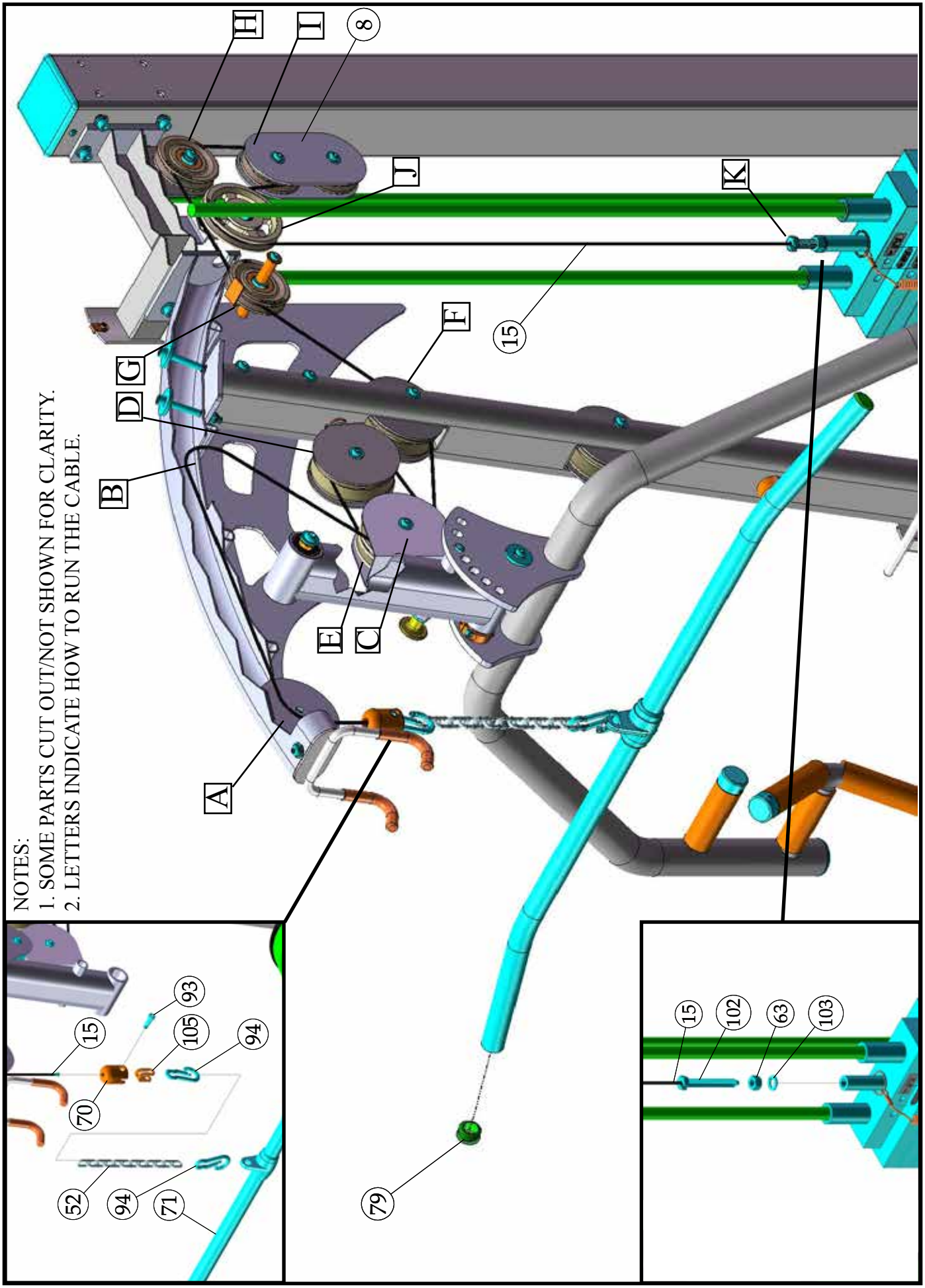

STEP 9 LAT CABLE FINAL STEP

Step 8 and 9 Assembly List		
Item #	**Description**	**Qty.**
8	**DOUBLE PULLEY PLATE (3 1/2 PULLEY)**	**2**
15	**LAT CABLE**	**1**
36	BLACK NYLON PULLEY 3/8 X 1 1/2 X 4 1/2	1
48	BUTTON HEAD SCREW GR-8 N/P 3/8-16 X 2 1/4	1
51	BUTTON HEAD SCREW GR-8 N/P 3/8-16 X 5	1
52	COIL CHAIN N/P 3/16 X 12” LONG	1
63	FINISHED HEX NUT N/P 1/2-13	1
64	FLANGED SPACER N/P 0.406 X 0.63 X 1.750 (1.6875) X 0.0799	2
66	FLAT WASHER SAE N/P 3/8”	2
70	HARD PVC CABLE STOPPER 1 1/2 RD X 2	1
71	LAT BAR 1 1/4 ALUMINUM	1
77	NYLON INSERT LOCK NUT N/P 3/8-16	2
78	NYLON PULLEY 3/8 X 1 X 4 1/2 BLACK	1
79	PLASTIC INSERT CAP 1 1/4” RD 11 GA	2
93	SHOULDER BOLT N/P 3/8 X 3/4	1
94	SNAP LINK N/P 8MM X 80MM	2
102	SPLIT HEX TAP BOLT GR-8 N/P 1/2-13 X 3 1/2	1
103	SPLIT LOCK WASHER N/P 1/2”	1
105	STRAP BRACKET 20 #SF20 STAINLESS STEEL	1

NOTES:
1. SOME PARTS CUT OUT/NOT SHOWN FOR CLARITY.

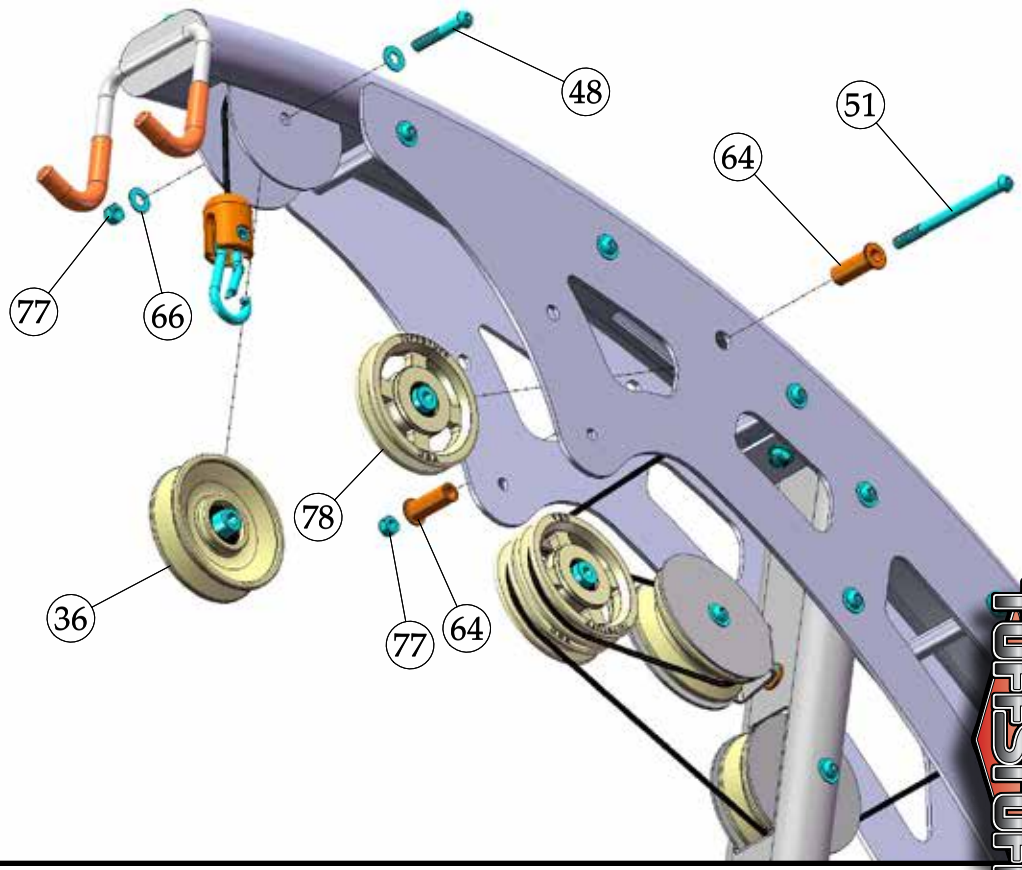

STEP 10 TENSION CABLE

Assembly List		
Item #	**Description**	**Qty.**
9	**FLOATING PULLEY BRACKET (3 1/2 PULLEY)**	**1**
24	**TENSION CABLE**	**1**
63	FINISHED HEX NUT N/P 1/2-13	1
101	SPLIT BOLT GR-8 N/P 1/2-13 X 1 (RND CUT)	1
102	SPLIT HEX TAP BOLT GR-8 N/P 1/2-13 X 3 1/2	1
103	SPLIT LOCK WASHER N/P 1/2”	2

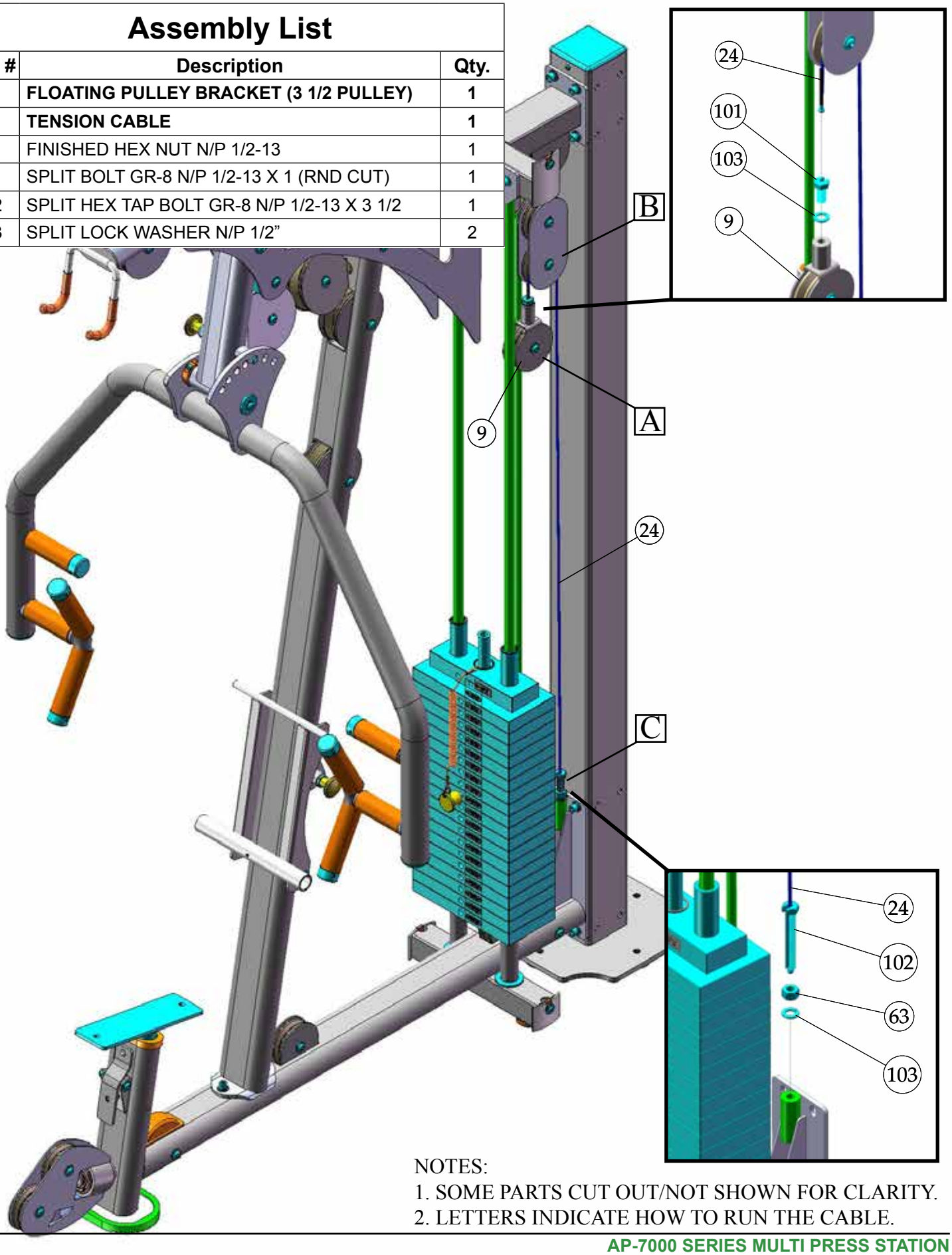

NOTES:
1. SOME PARTS CUT OUT/NOT SHOWN FOR CLARITY.
2. LETTERS INDICATE HOW TO RUN THE CABLE.

Assembly List

Item #	Description	Qty.
1	**ABDOMINAL CRUNCH CABLE**	**1**
52	COIL CHAIN N/P 3/16 X 12” LONG	1
70	HARD PVC CABLE STOPPER 1 1/2 RD X 2	2
72	LEATHER ANKLE STRAP (PART # H900A)	1
73	LOW ROW BAR 1 1/4 ALUMINUM	1
79	PLASTIC INSERT CAP 1 1/4” RD 11 GA	2
93	SHOULDER BOLT N/P 3/8 X 3/4 CUSTOM	2
94	SNAP LINK N/P 8MM X 80MM	3
105	STRAP BRACKET 20 #SF20 STAINLESS STEEL	2
107	TRICEP ROPE (#MTR)	1
116	NYLON D HANDLE	1

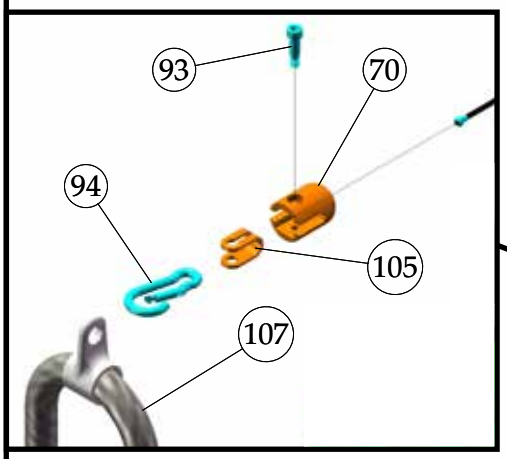

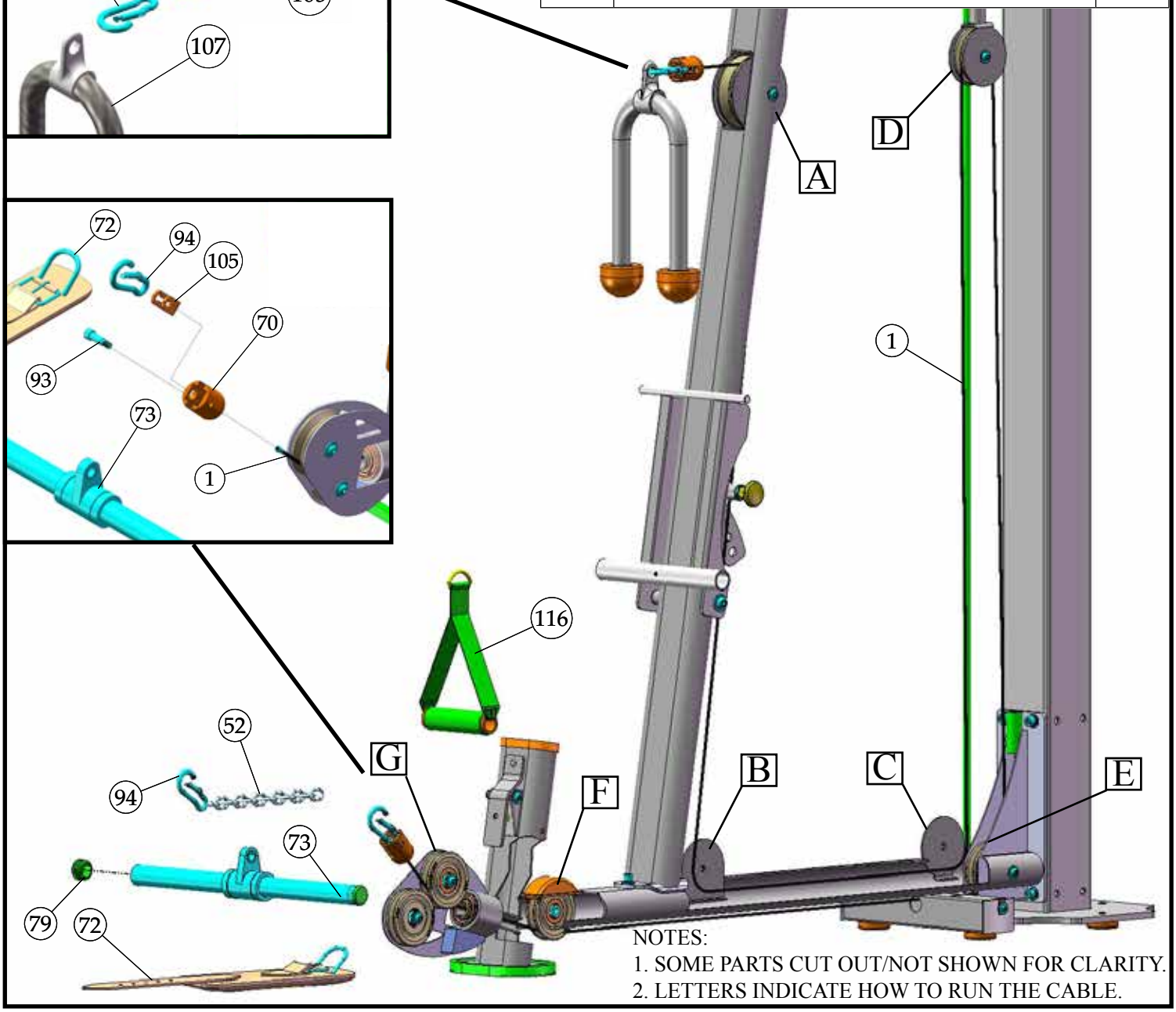

NOTES:
1. SOME PARTS CUT OUT/NOT SHOWN FOR CLARITY.
2. LETTERS INDICATE HOW TO RUN THE CABLE.

STEP 12 ABDOMINAL CRUNCH CABLE FINAL STEP

Assembly List

Item #	Description	Qty.
38	BLACK NYLON PULLEY 3/8 X 1 X 3 1/2	2
46	BUTTON HEAD SCREW GR-8 N/P 3/8-16 X 1 3/4	2
66	FLAT WASHER SAE N/P 3/8”	4
77	NYLON INSERT LOCK NUT N/P 3/8-16	2

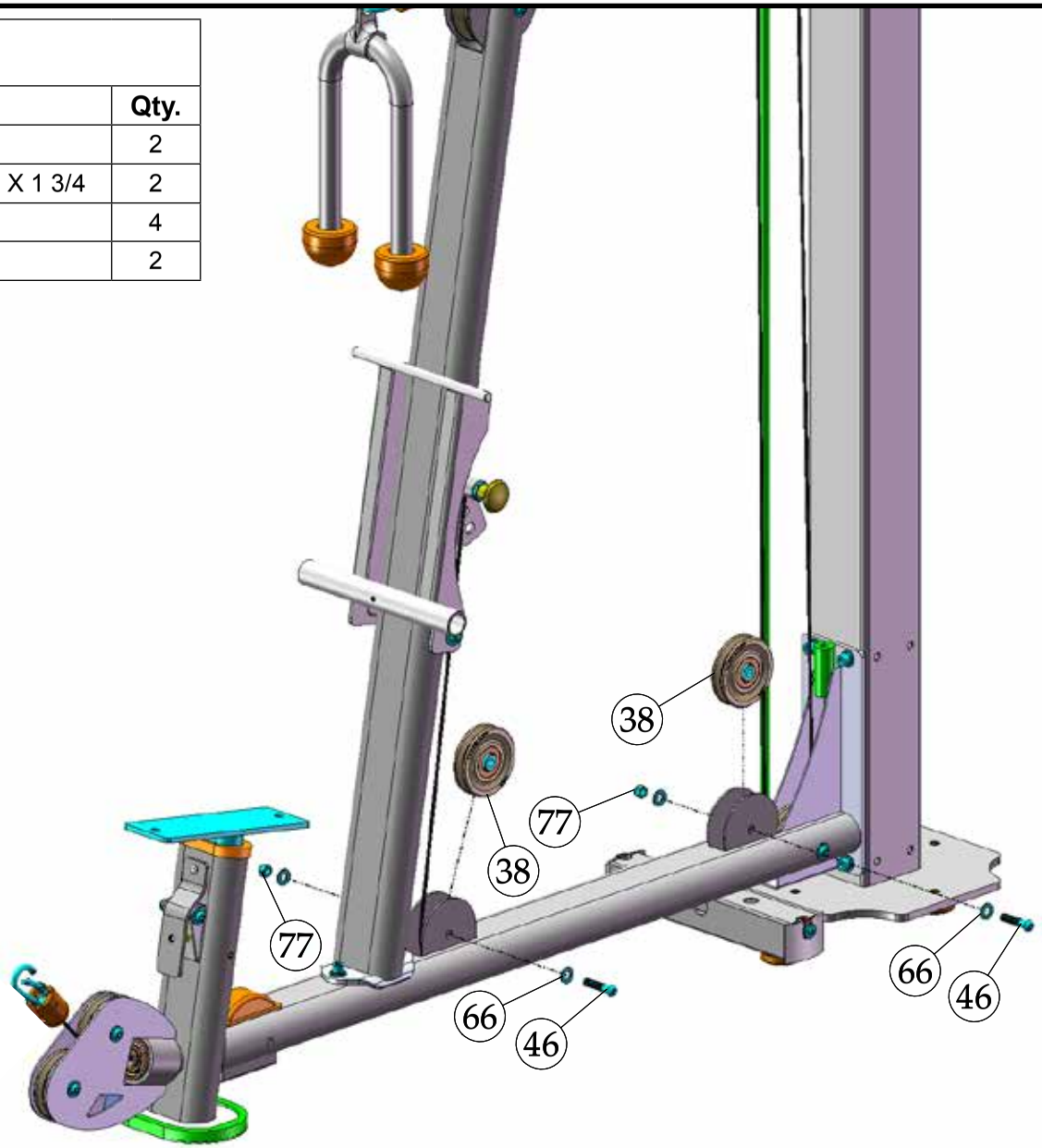

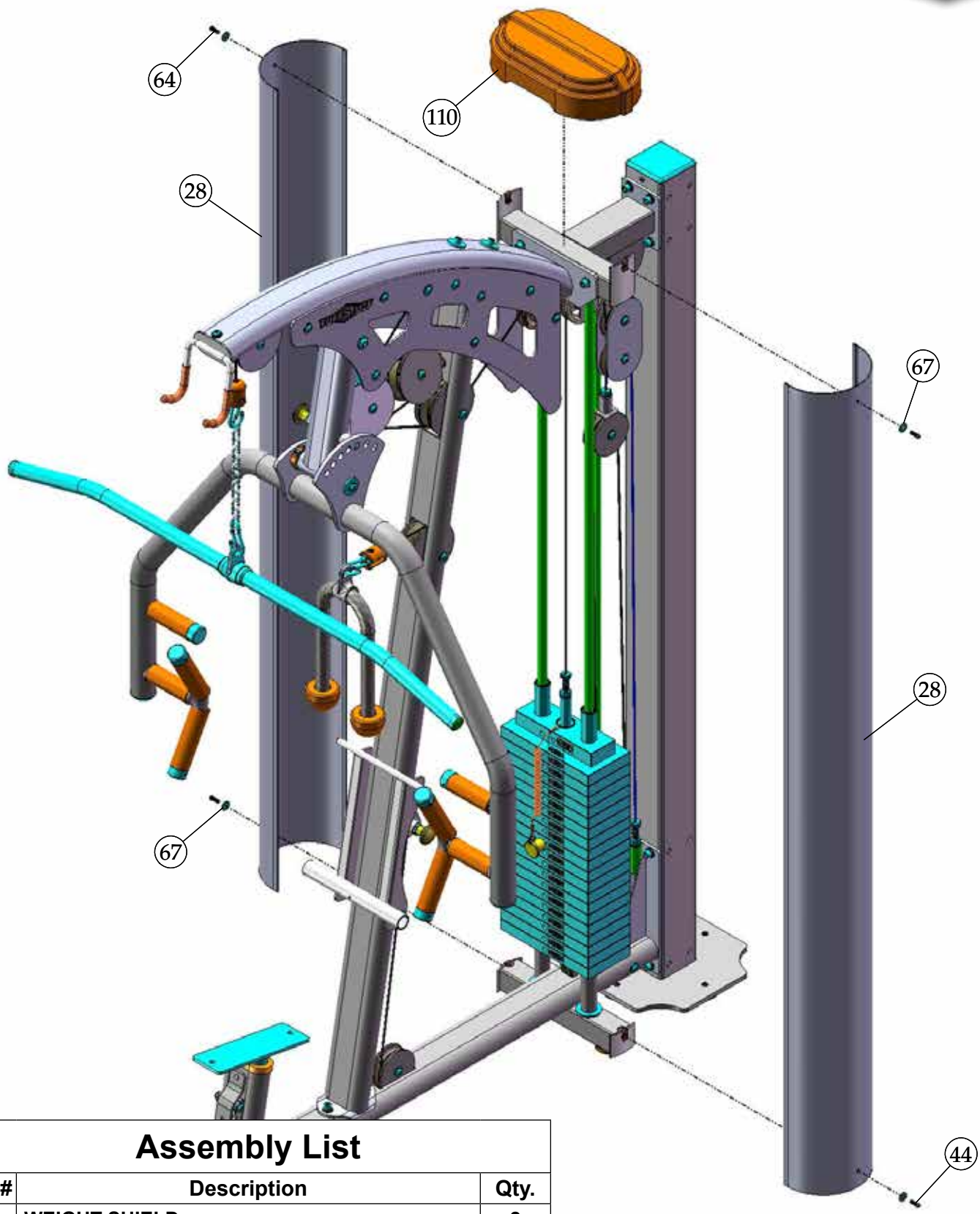

Assembly List

Item #	Description	Qty.
28	**WEIGHT SHIELD**	**2**
44	BUTTON HEAD SCREW GR-8 N/P 1/4-20 X 3/4	4
67	FLAT WASHER USS N/P 1/4”	4
110	WEIGHT STACK LID	1

Assembly List

Item #	Description	Qty.
5	**BACK PAD**	**1**
10	**FOOT ROLL (1 X 5 1/2 X 9)**	**2**
11	**FOOT ROLL TUBE 1 X 28 3/8**	**1**
20	**SEAT PAD**	**1**
66	FLAT WASHER SAE N/P 3/8”	4
69	FLAT WASHER N/P 3/8 ID X 1 1/2 OD X 3/16	2
74	METAL HINGE	2
75	NYLON FLAT WASHER 1 X 1 1/4 X 1/16	2
87	RUBBER BUMPER W/WASHER 3/8 X 1 1/2	1
98	SOCKET SET SCREW ALLOY 1/4-20 X 1/4	1
104	SPLIT LOCK WASHER N/P 3/8”	2
115	BUTTON HEAD SCREW GR-8 N/P 3/8-16 X 1 1/4	7

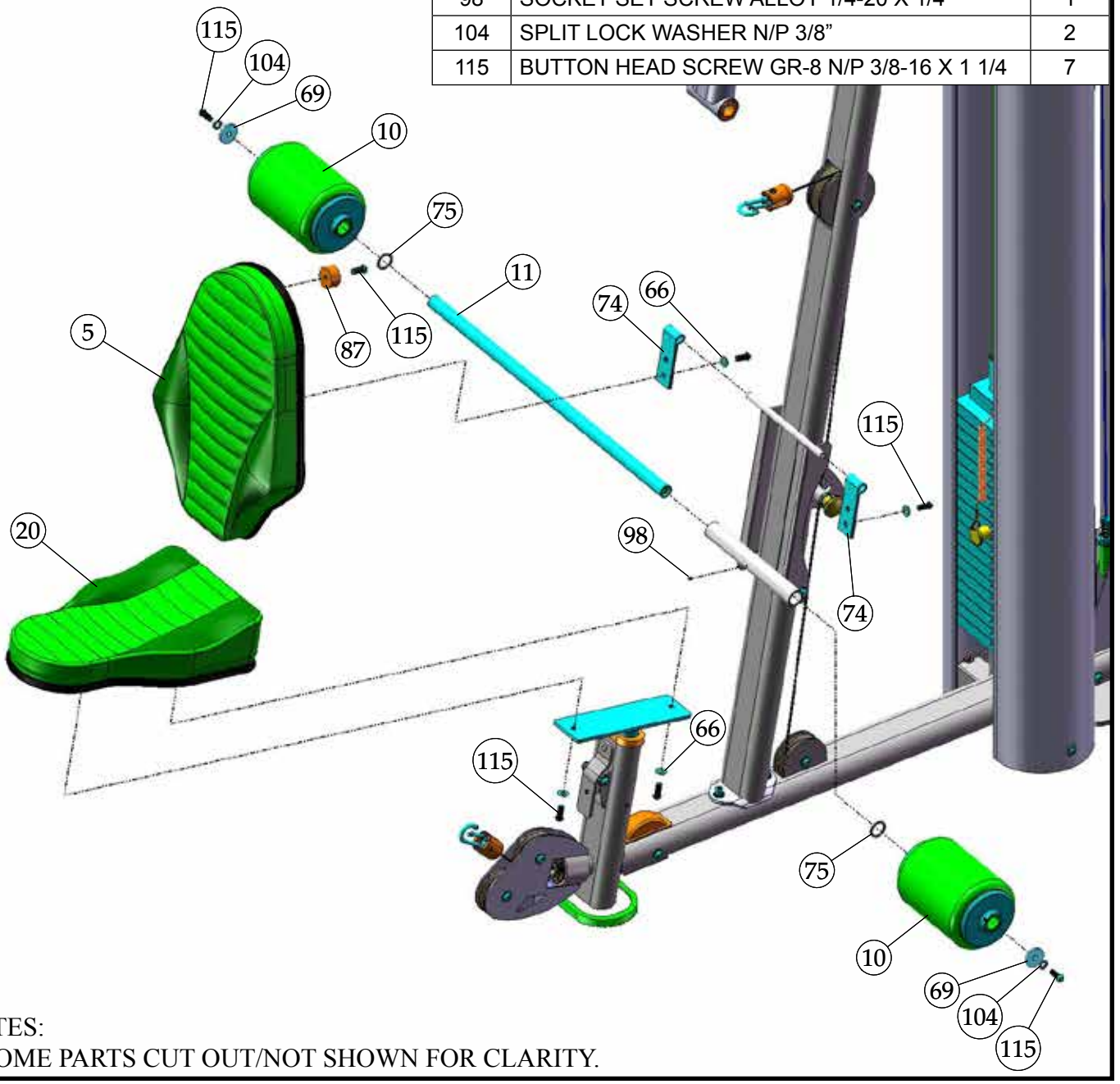

NOTES:
1. SOME PARTS CUT OUT/NOT SHOWN FOR CLARITY.

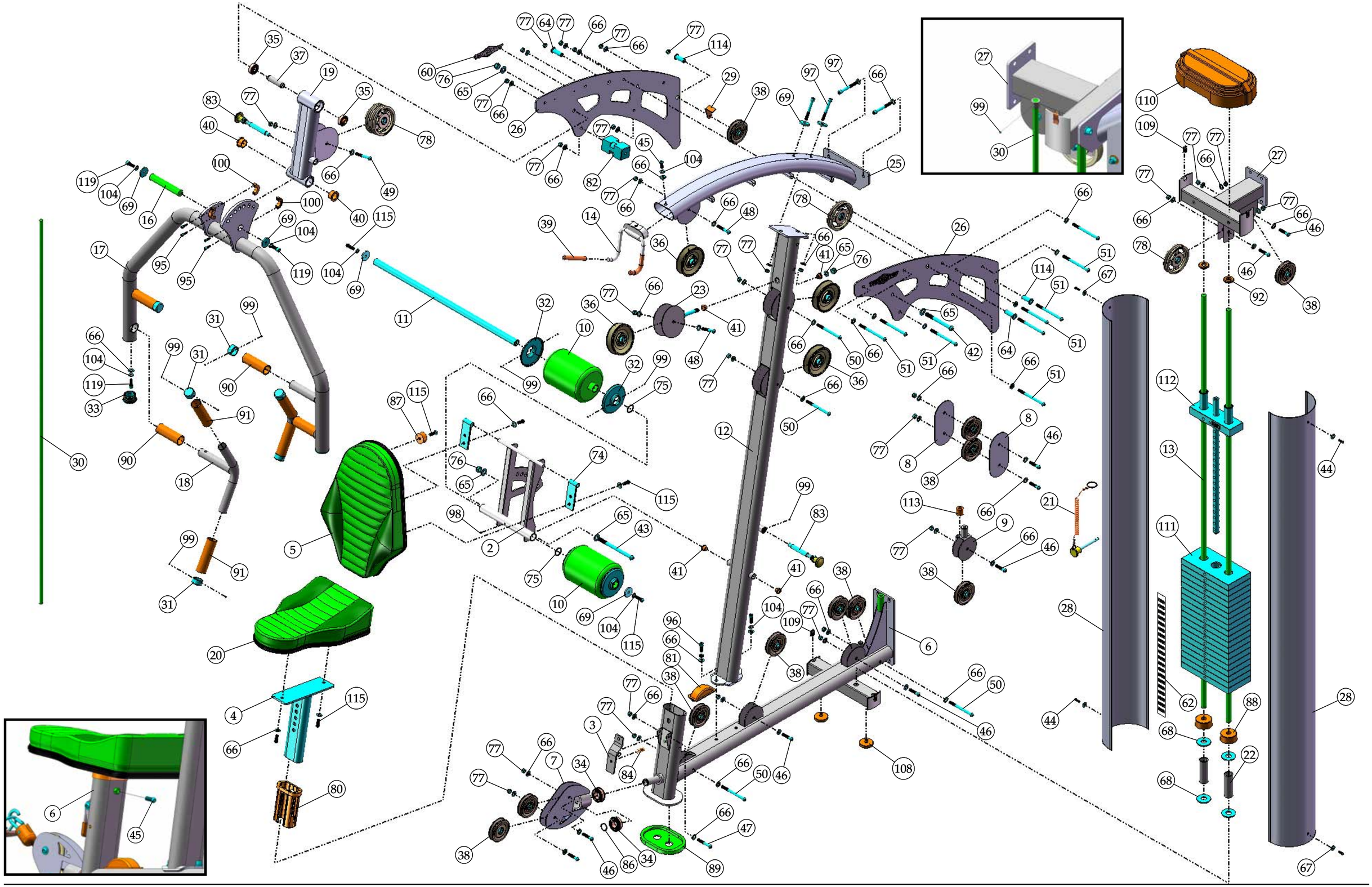

COLOR CHART
GRAY= SUB-ASSEMBLY PARTS
BLACK= HARDWARE

AP-71MP
Parts List

Item No.	Description	Rev.	Part No.	Qty.	Item No.	Description	Part No.	Qty.
1	ABDOMINAL CRUNCH CABLE	0	UP6263	1	61	DECAL-WARNING DO NOT USE FOR CHINNING... (REV 0)	BNH1890	1
2	ADJUSTABLE BACK PAD BRACKET	0	UP3703	1	62	DECAL-WEIGHT NUMBERS REF TP-10 (200 lbs)	BNH1542	1
3	ADJUSTABLE RELEASE HANDLE	0	UP7086	1	63	FINISHED HEX NUT N/P 1/2-13	BNH2516	2
4	ADJUSTABLE SEAT FRAME	0	UP6197	1	64	FLANGED SPACER N/P .431 X .617 X 1.755 (1.667) X .089	BNH2536	2
5	BACK PAD	0	UP6258	1	65	FLAT WASHER SAE N/P 1/2"	BNH2523	5
6	BASE FRAME	0	UP6198	1	66	FLAT WASHER SAE N/P 3/8"	BNH2524	71
7	BOTTOM SWIVEL PULLEY BRACKET	0	UP6232	1	67	FLAT WASHER USS N/P 1/4"	BNH2525	4
8	DOUBLE PULLEY PLATE (3 1/2 PULLEY)	0	UP6229	2	68	FLAT WASHER N/P 3/4 X 2	BNH2526	4
9	FLOATING PULLEY BRACKET (3 1/2 PULLEY)	0	UP6230	1	69	FLAT WASHER N/P 3/8 ID X 1 1/2 OD X 3/16 THICK	BNH2396	6
10	FOOT ROLL (1 X 5 1/2 X 9)	0	UP6270	2	70	HARD PVC CABLE STOPPER 1 1/2 RD X 2	BNH2258	3
11	FOOT ROLL TUBE 1 X 28 3/8	0	UP6231	1	71	LAT BAR 1 1/4 ALUMINUM	BNH1770	1
12	FRONT UPRIGHT	0	UP6200	1	72	LEATHER ANKLE STRAP (PART # H900A)	BNH1231	1
13	GUIDE RODS	0	UP6201	2	73	LOW ROW BAR 1 1/4 ALUMINUM	BNH1771	1
14	LAT BAR HOLDER	0	UP3744	1	74	METAL HINGE	BNH0046	2
15	LAT CABLE	0	UP6262	1	75	NYLON FLAT WASHER 1 X 1 1/4 X 1/16	BNH0393	2
16	PIVOT AXLE 1 X 5 3/4	0	UP3796	1	76	NYLON INSERT LOCK NUT N/P 1/2-13	BNH2451	3
17	PRESS BAR	0	UP6228	1	77	NYLON INSERT LOCK NUT N/P 3/8-16	BNH2450	30
18	PRESS BAR HANDLE	0	UP3618	2	78	NYLON PULLEY 3/8 X 1 X 4 1/2 BLACK	BNH0506	4
19	PRESS BAR HOUSING	0	UP3718	1	79	PLASTIC INSERT CAP 1 1/4" RD 11 GA	BNH0573	4
20	SEAT PAD	0	UP6259	1	80	PLASTIC INSERT ELLIPTICAL GUIDE (2X4)	BNH1760	1
21	SELECTOR PIN W/COIL 3/8 X 4 GOLD KNOB	0	UP3035	1	81	PLASTIC PULLEY COVER	BNH2453	1
22	SPACER 1 1/4 OD X 1 ID X 3 3/4	0	UP6202	2	82	PLASTIC STOPPER	BNH1765	1
23	SWIVEL PULLEY BRACKET	0	UP6261	1	83	PULL PIN 1/2 X 5 5/8 LIGHT SPRING (YELLOW KNOB)	BNH0701	2
24	TENSION CABLE	0	UP6264	1	84	PULL PIN STIFF SPRING 17/32 X 1 1/2 K-105SS	BNH0519	1
25	TOP FRAME	0	UP6203	1	85	DECAL-MAINTENANCE	BNH2226	1
26	TOP FRAME REINFORCEMENT PLATE	0	UP6227	2	86	RETAINING SNAP RING EXT. PLAIN .925 X 1 X .042	BNH0419	1
27	TOP GUIDE ROD HOUSING	0	UP6204	1	87	RUBBER BUMPER W/WASHER 3/8 X 1 1/2	BNH0514	1
28	WEIGHT SHIELD	0	UP6205	2	88	RUBBER DONUT 3/4 X 2 1/2	BNH0068	2
29	CABLE RETAINER BRACKET 3 1/2 PULLEY (1/8 THICK)	0	UP7083	1	89	RUBBER FOOT FOR 6 X 4 1/4 PLATE	BNH1647	1
30	GUIDE ROD 1/2 RD X 66 3/4	0	UP6210	1	90	RUBBER GRIP 1.1875 ID X .125 X 4 1/4	BNH0936	4
31	ALUMINUM CAP 1.270" RD		BNH0538	6	91	RUBBER GRIP 1.1875 ID X .125 X 5	BNH1809	4
32	ALUMINUM FOOT ROLL CAP 1 5/16 ID X 4 1/2 OD X 3/4		BNH1509	4	92	RUBBER GROMMET 3/4" ID	BNH0401	2
33	ALUMINUM INSERT CAP 2" RD		BNH2470	2	93	SHOULDER BOLT N/P 3/8 X 3/4 CUSTOM	BNH2487	3
34	BALL BEARING #W 516		BNH0628	2	94	SNAP LINK N/P 8MM X 80MM	BNH2517	5
35	BEARING 6203 W/BUSHING		BNH0843	2	95	SOCKET CAP SCREW GR-8 N/P 1/4-28 X 3/4	BNH2389	4
36	BLACK NYLON PULLEY 3/8 X 1 1/2 X 4 1/2 (V3700)		BNH1694	4	96	SOCKET CAP SCREW GR-8 N/P 3/8-16 X 1 1/4	BNH2362	2
37	BEARING SPACER 2 7/8"		BNH1941	1	97	SOCKET CAP SCREW GR-8 N/P 3/8-16 X 3	BNH2369	4
38	BLACK NYLON PULLEY 3/8 X 1 X 3 1/2 (P-35375-H)		BNH0553	11	98	SOCKET SET SCREW N/P 1/4-20 X 3/8	BNH2503	1
39	BLACK RUBBER GRIP 1/2 X 4 7/8		BNH1818	2	99	SOCKET SET SCREW N/P 10-32 X 1/8	BNH2518	23
40	BRONZE BUSHING 1 X 1 1/4 X 3/4 X 1 1/2 X 1/8		BNH0527	2	100	SPLIT COLLAR 1" (PAINTED)	BNH2462	2
41	BRONZE BUSHING 1/2 X 5/8 X 1/2 X 7/8 X 1/8		BNH0528	4	101	SPLIT BOLT GR-8 N/P 1/2-13 X 1 (RND CUT)	BNH2478	1
42	BUTTON HEAD SOCKET CAP SCREW GR-8 N/P 1/2-13 X 5		BNH2417	1	102	SPLIT HEX TAP BOLT GR-8 N/P 1/2-13 X 3 1/2	BNH2527	2
43	BUTTON HEAD SOCKET CAP SCREW GR-8 N/P 1/2-13 X 6 1/2		BNH2422	1	103	SPLIT LOCK WASHER N/P 1/2"	BNH2519	3
44	BUTTON HEAD SOCKET CAP SCREW GR-8 N/P 1/4-20 X 3/4		BNH2447	4	104	SPLIT LOCK WASHER N/P 3/8"	BNH2520	9
45	BUTTON HEAD SOCKET CAP SCREW GR-8 N/P 3/8-16 X 1		BNH2528	2	105	STRAP BRACKET 20 #SF20 STAINLESS STEEL	BNH0562	3
46	BUTTON HEAD SOCKET CAP SCREW GR-8 N/P 3/8-16 X 1 3/4		BNH2426	9	106	SUPER LUBE TEFLON LUBRICANT 82340	BNH0704	2
47	BUTTON HEAD SOCKET CAP SCREW GR-8 N/P 3/8-16 X 2 1/2		BNH2428	1	107	TRICEP ROPE (#MTR)	BNH1628	1
48	BUTTON HEAD SOCKET CAP SCREW GR-8 N/P 3/8-16 X 2 1/4		BNH2429	2	108	RUBBER BUMPER 2"	BNH2486	2
49	BUTTON HEAD SOCKET CAP SCREW GR-8 N/P 3/8-16 X 2 3/4		BNH2430	1	109	U-STYLE TAPPED HOLE NUT 1/4-20	BNH0708	4
50	BUTTON HEAD SOCKET CAP SCREW GR-8 N/P 3/8-16 X 4 1/2		BNH2437	4	110	WEIGHT STACK LID	BNH1693	1
51	BUTTON HEAD SOCKET CAP SCREW GR-8 N/P 3/8-16 X 5		BNH2440	9	111	10 LB STEEL WEIGHT PLATE BLACK 4 9/16 X 9 7/16 ASSY	BNH1650	19
52	COIL CHAIN N/P 3/16 X 12		BNH2522	2	112	10 LB TOP PLATE W/ADJ SLTR BAR 19 BLK WTS ASSY	BNH1982	1
53	DECAL-ADJUSTMENT BACK PAD		BNH2500	1	113	NYLON BUSHING 1/2 ID X 1 OD X 1	BNH2456	1
54	DECAL-ADJUSTMENT PRESS BAR		BNH2499	1	114	FLANGED SPACER N/P .431 X .617 X 1.602 (1.517) X .089	BNH2515	2
55	DECAL-CAUTION WEIGHT TRAINING SAFETY... (REV 1)		BNH0126	1	115	BUTTON HEAD SOCKET CAP SCREW GR-8 N/P 3/8-16 X 1 1/4	BNH2521	7
56	DECAL-DANGER TIGHTEN THIS RETAINING... (REV 2)		BNH0142	2	116	NYLON D HANDLE	BNH1215	1
57	DECAL-EXERCISE BENCH PRESS		BNH2460	1	117	DECAL WARRANTY LIMITED 6.5 X 2	BNH2495	1
58	DECAL-IMPORTANT ADJUST CABLE HERE (REV 0)		BNH1893	2	118	DECAL- SERIAL NO. (AP-71MP)	BNH2540	1
59	DECAL-IMPORTANT FOR BEST PERFORMANCE... (REV 0)		BNH1894	2	119	SOCKET CAP SCREW GR-8 N/P 3/8-16 X 1	BNH2360	4
60	TUFFSTUFF LOGO ALUMINUM SMALL (ADHESIVE)		BNH2463	2				

Maintenance

TuffStuff Basic Strength Equipment Safety and General Maintenance

All TUFFSTUFF strength equipment is designed and manufactured to offer maximum, long-life service with minimal maintenance. However, safety inspection and routine maintenance in your facility should be the upmost importance in your daily operation. Information presented in these pages will serve as a basic guideline to design your own inspection procedures.

Part One: General Inspection and Cleaning

Equipment should be wiped down with a damp cloth and dried on a daily basis. The powder coat finish should be polished with a good car wax on a monthly basis. A daily wipe down of the upholstery with a lanolin based hand cleaner or Naugahyde Cleaner. Do not use cleaners such as Lysol or Windex as they will dry out and crack the vinyl. Lanolin hand cleaner dissolves the sweat and lubricates the vinyl, maintaining its natural flexibility. Sweat is corrosive and when left on the frame and components will eventually cause corrosion or rust. When performing these cleaning sessions, it is the perfect time to inspect the equipment and note any problems for the maintenance personnel to correct.

1. Check equipment if it is operating properly.
2. Check the cable for loose fittings or frayed cable and is seating properly on the pulleys and cams.
3. Make sure that the proper weight stack selector pin is with each machine and that the pin functions properly.
4. If something appears loose be sure to have it tightened immediately.
5. If a piece of equipment appears damaged or not operation properly, place the piece out-of-service immediately.

Part Two: Maintenance

In this paragraph, we will discuss the inspection of the cables, pulleys and their associated components. If there exists the potential for injury to occur on a machine, it will most likely lie in the cable system. It is important to inspect the cables frequently and let it be known to all users that it is their responsibility to report any worn-out cable to prevent a sudden failure that can result in an injury. Cables are moving parts, meaning cable-wear will occur regardless of the type or size used. In the advent of the 3/16” mill-spec cable this wear takes longer to become apparent and this is why frequent inspections are so important.

1. Check the cable termination at the weight stack. To perform any cable tension adjustment, loosen the hex jam nut and thread the hex tap bolt in or out to give cable the proper tension. Re-tightened the hex jam nut when adjustment is complete and make sure the hex tap bolt is threaded 1/2” into the socket of the selector bar top plate.

2. Check the cable as it terminates at the cam. Check the end fitting for any signs of fraying in this area. Inspect the bolt and nut and/or screw holding the fitting and be sure that it is tight.

3. Check the cables as it passes over all pulley wheels. Visually inspect the cables and pulleys. A cable that is wearing will exhibit a ballooned surface that passes over the pulley. This is and early warning sign to replace the cable.

Maintenance

Part Three: Lubrication

Bearing and linear bearings systems have advanced over the years but they must be maintained on a regular basis if you expect them to last and perform efficiently. TuffStuff uses only the highest quality bearings and linear motion components that are virtually trouble-free but requires the regular preventive maintenance to insure long-lasting performance.

1. Bronze and nylon bushings, we recommend on a monthly basis to spray a teflon-base lubricant (silicone-free) directly onto the shaft as it passes through these bushings. Spray a small amount onto the shaft and rotate it through its complete movement and wipe off any excess.

2. Weight stack guide rods and bushings, again use teflon spray lubricant and this time spray onto a rag and wipe the guide rods down with this rag on a weekly basis. Do not use WD-40 or other lubricants as they attract dirt and will crate a mess between the weight plates and bushings.

3. Sealed bearings pivot points, as the name implies are protected from the outside environment and require no lubrication. During the machine wipe down, wipe the external bearing surfaces with the damp rag and dried to prevent the build up of dust and sweat.

4. Linear bearing systems are precision, high load components that require regular maintenance. Dirt and corrosion are the major culprits in linear bearing failure. The hardened shafts must be wiped down weekly and lubricated with a light layer of teflon grease. We recommend a teflon-base (silicone-free) gel/grease for this purpose. Lack of care and maintenance will result in corrosion of the linear shaft causing the bearings to clogged and jammed.

If you religiously perform the maintenance procedures, you will increase the life of the machine and ultimately lower your maintenance costs with fewer replaced components and downtime.

Any doubts, equipment with mechanical problems should be placed “Out-of-Service” until all problems are corrected. If replacement parts are required or maintenance questions, please contact:

TuffStuff Fitness Equipment, Inc.
Service Department
1325 E. Franklin Avenue
Pomona, CA 91766
1-800-961-9377
e-mail: service@tuffstuff.net

DO NOT DISCARD THIS MANUAL

TUFFSTUFF LIMITED WARRANTY

TuffStuff warrants to the original purchaser that TuffStuff equipment will be free from defects in material and workmanship. All warranty periods begin to run from the date of delivery to the original purchaser. The warranty and remedies set forth herein are conditioned upon proper storage, installation, use and maintenance and conformance with any recommendations of TuffStuff. This warranty does not cover products not manufactured by TuffStuff or products which are altered without the express written consent of TuffStuff. This warranty as specified:

WARRANTY: a) Frames, welds, cams and weight plates -- Lifetime, b) Pivot bearings, pulleys, bushings, gas shocks and guide rods -- Five (5) years, c) Belts, linear bearings and pull-pin components -- One (1) year, and d) Upholstery, cables, finish and rubber grips -- Six (6) months, and all other parts not mentioned elsewhere in this warranty will expire one (1) year from the date of delivery to the original purchaser. The obligation of TuffStuff under this warranty is limited to repairing or replacing warranted defective parts, as TuffStuff may elect, at TuffStuff's facility in Pomona, California, without charge to purchaser for either parts or labor. Purchaser is responsible for installation of repaired or replaced parts, and all transportation and insurance costs on returned or replaced equipment to and from TuffStuff's facility in Pomona.

THE FOREGOING SHALL CONSTITUTE THE SOLE REMEDY OF THE PURCHASER AND THE SOLE LIABILITY OF TUFFSTUFF WITH REGARD TO WARRANTY. NO IMPLIED STATUTORY WARRANTY OR IMPLIED STATUTORY WARRANTY OF MERCHANTABILITY OR FITNESS FOR A PARTICULAR PURPOSE SHALL APPLY. IN NO EVENT, WHETHER AS A RESULT OF BREACH OF CONTRACT, WARRANTY, NEGLIGENCE OR OTHERWISE, SHALL TUFFSTUFF BE LIABLE FOR SPECIAL, INCIDENTAL OR CONSEQUENTIAL DAMAGES INCLUDING, BUT NOT LIMITED TO, LOSS OF PROFITS OR REVENUE, LOSS OF USE OF EQUIPMENT, COST OF CAPITAL, COST OF SUBSTITUTION EQUIPMENT, DOWNTIME COST, OR CLAIMS OF CUSTOMERS OR PURCHASER FROM SUCH DAMAGE.

This written warranty is the final, complete and exclusive agreement of the parties with respect to the quality or performance of the equipment and no action for breach of this written warranty or any implied warranty shall be commenced more than one (1) year after the accrual of the cause of action. No modification of this warranty or waiver of its terms shall be binding on either party unless approved in writing by an authorized representative of the party. Contact TuffStuff Fitness Equipment, Inc. at 1325 E. Franklin Avenue, Pomona, California 91766, before returning any defective equipment.

TuffStuff Fitness Equipment, Inc.
1325 E. Franklin Avenue
Pomona, CA 91766, USA
Ph: 909-629-1600 Fax: 909-629-4967
E-mail: service@tuffstuff.net Net: www.tuffstuff.net