OWNERS MANUAL

CF2179B

OLYMPIC FID BENCH

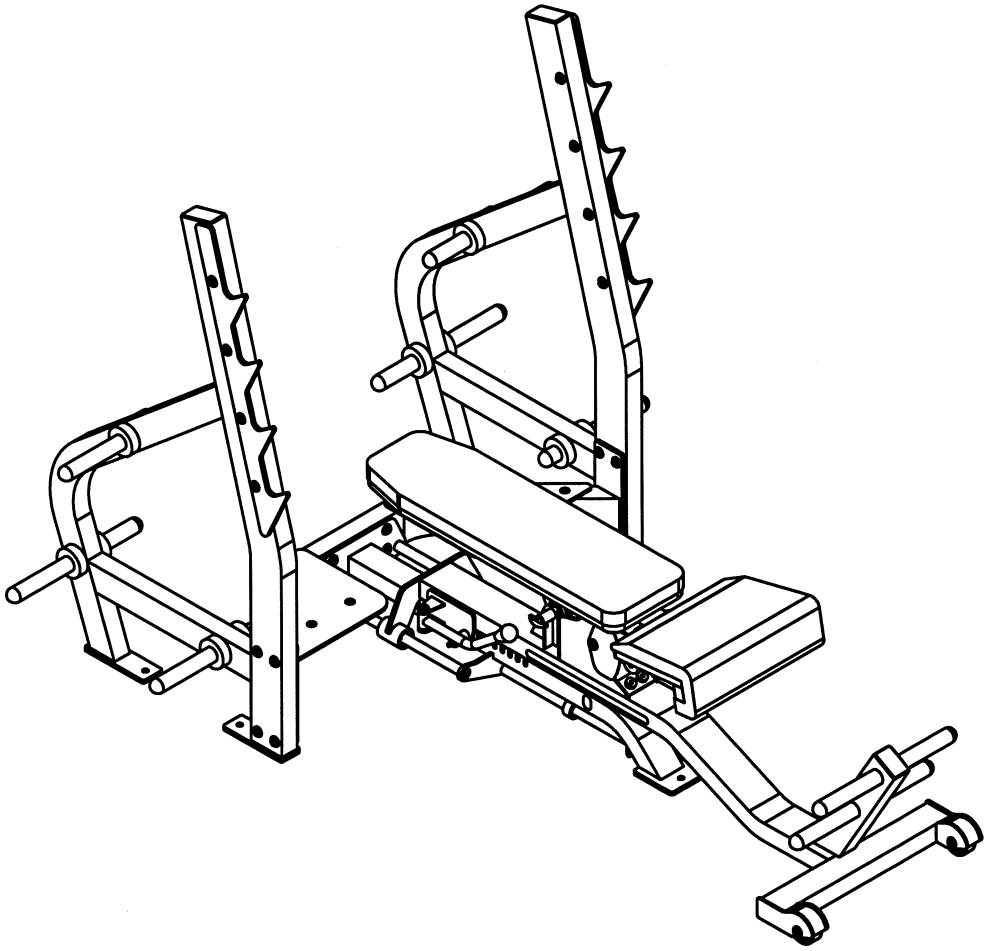

Note: Both Serial Number and Model Number are Required when Ordering Parts

RECORD SERIAL NUMBER HERE

CATALOG NUMBER

0204-002

Customer Service

(800) 548-5438
(858) 578-7676
Fax
(858) 578-9558

OWNERS MANUAL

CONTENTS

INSTRUCTIONS (Step 1) 2

FRAME ASSEMBLY (Step 2) 4

PRE-ASSEMBLY (Step 3) 17

PART LISTING 20

HARDWARE LISTING 21

ABBREVIATION CHART 22

BOLT SIZING CHART 23

WASHER SIZING CHART 25

WEIGHT TRAINING TIPS 28

WEIGHT TRAINING EXERCISE LOG 29

DECAL PLACEMENTS 30

GENERAL MAINTENANCE INFORMATION 35

LIMITED WARRANTY 37

Step 1

INSTRUCTIONS

Before beginning assembly please take the time to read the instructions thoroughly. Please use the various lists in this manual to make sure that all parts have been included in your shipment. When ordering, use the part number and description from the lists. Use only Hoist replacement parts when servicing. Failure to do so will void your warranty and could result in personal injury.

Hoist equipment is designed to provide the smoothest, most effective exercise motion possible. After assembly, you should check all functions to ensure correct operation. If you experience problems, first recheck the assembly instructions to locate any possible errors made during assembly. If you are unable to correct the problem, call your authorized Hoist dealer. Be sure to have your serial number and this manual when calling. When all parts have been accounted for, continue on.

TOOLS REQUIRED

Socket Wrench

Allen Wrench Set (3/16", 5mm, 8mm)

1/2", 9/16" and 3/4" Sockets

3/4" Open end Wrench

Crescent Wrench

Rubber Mallet

Tape Measure

OWNERS MANUAL

Step 2

FRAME ASSEMBLY

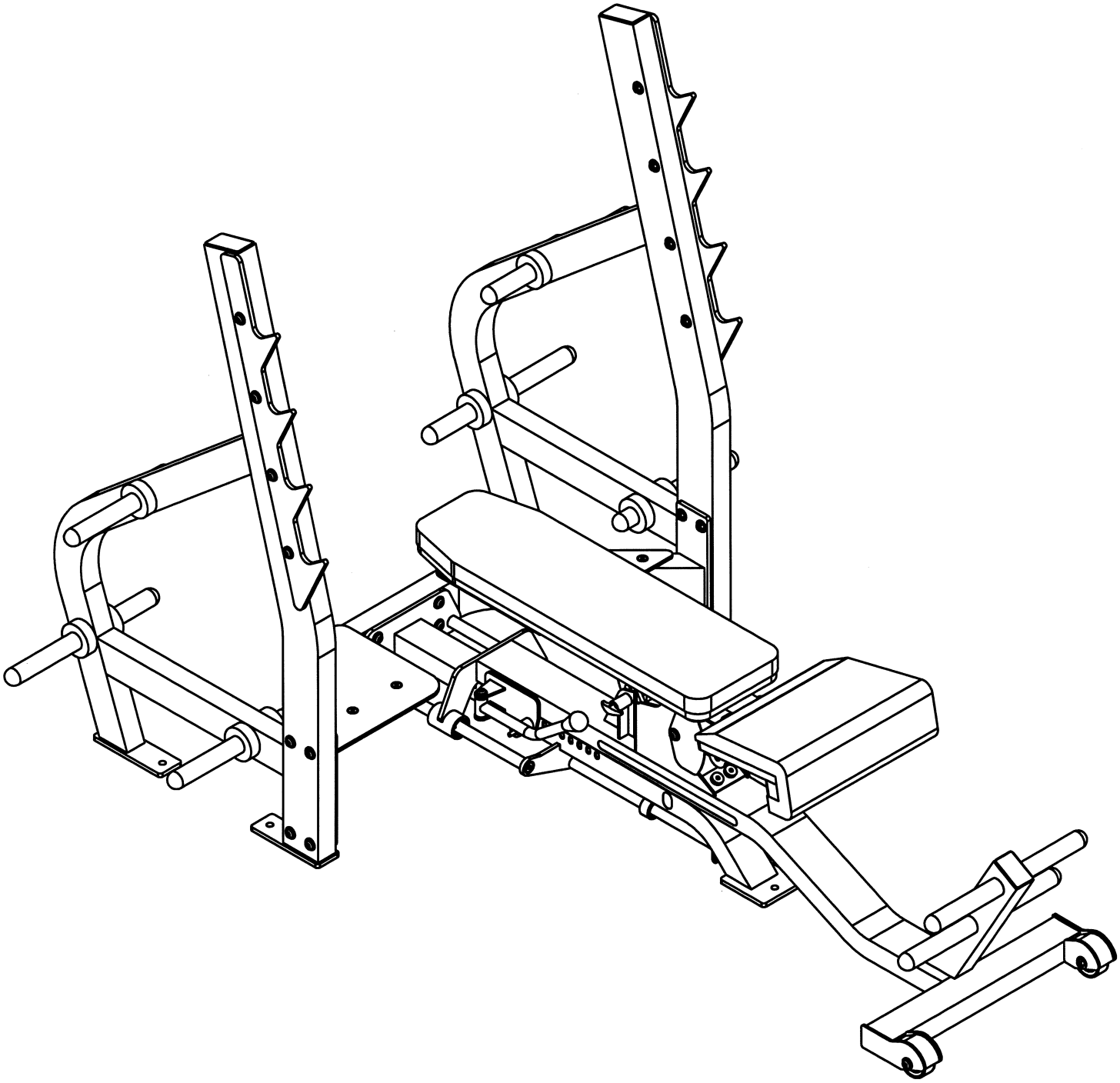

Step 2a

FRAME ASSEMBLY

Start assembly by sliding two (19)'s, and (20) into (4) then attach (4) to (5) by bolting (19)'s, and (20), to (5). Wrench tighten bolts.

Part Descriptions

6 - Base Frame
5 - Base Mount Assembly
19 - Ø25mm x 468.08mm Guide Rod
20 - Ø25mm x 434.97mm Guide Rod

Hardware Descriptions

J - 1/2"-13 x 1" FHS (WZ)
M - 3/8-16 x 1 1/4" BHS (WZ)
AB - 3/8" Flat Washer (WZ)
AE - 3/8" Internal Lock Washer (WZ)

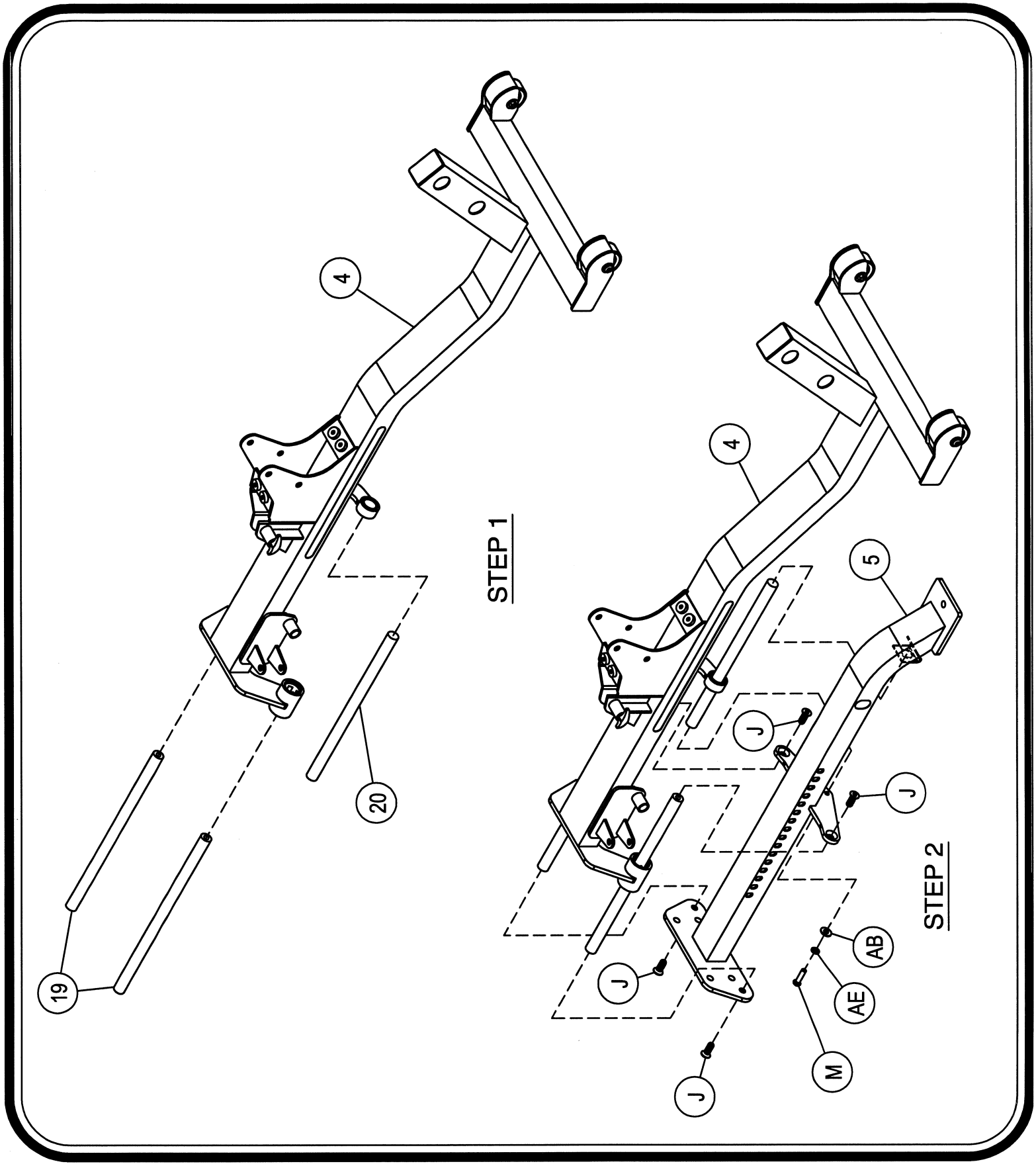
4
19
20
STEP 1
4
5
J
J
J
J
AB
AE
M
STEP 2

Step 2a

FRAME ASSEMBLY

Start assembly by bolting (5), (6), and (7)'s together. Wrench tighten bolts.

Part Descriptions

5 - Base Mount Assembly
6 - Cross Brace Assembly
7 - Upright Stand Assembly

Hardware Descriptions

A - 1/2-13 x 3" BHS (WZ)
AA - 1/2" Flat Washer (WZ)
BA - 1/2" Thin Nylok Nut (WZ)
CU - Rectangular Foot Pad
CV - Square Foot Pad

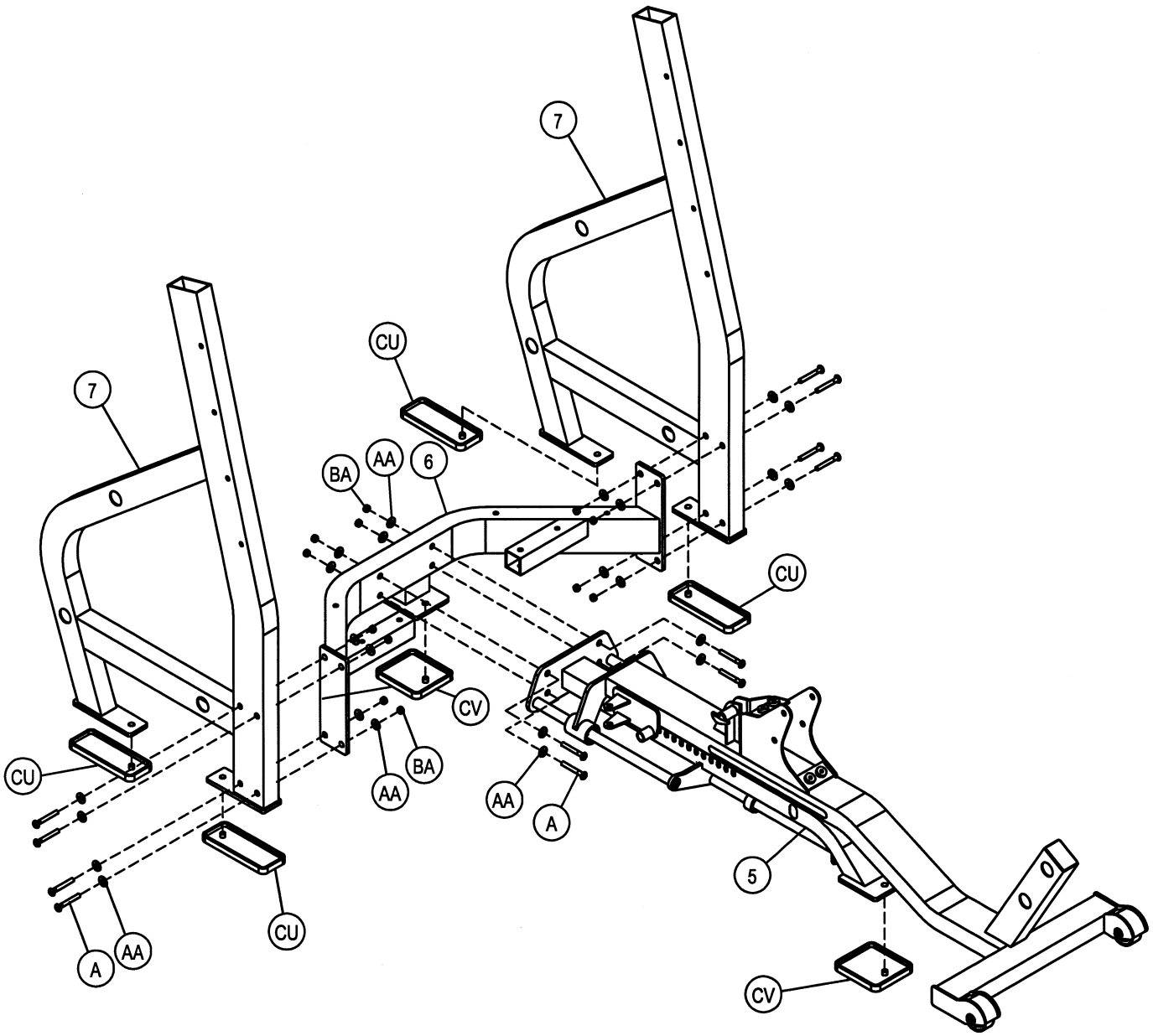
7
7
CU
BA
AA
6
CU
CV
CU
BA
AA
AA
A
5
CU
A
AA
CV

Step 2b

FRAME ASSEMBLY

Attach (9) to (4). Pivot bolts is wrench tighten and back off 1/4" turn or until (9) swivels freely.

Part Descriptions

4 - Base Frame
9 - Handle Assembly

Hardware Descriptions

A - 1/2-13 x 3" BHS (WZ)
AA - 1/2" Flat Washer (WZ)
BA - 1/2" Thin Nylok Nut (WZ)

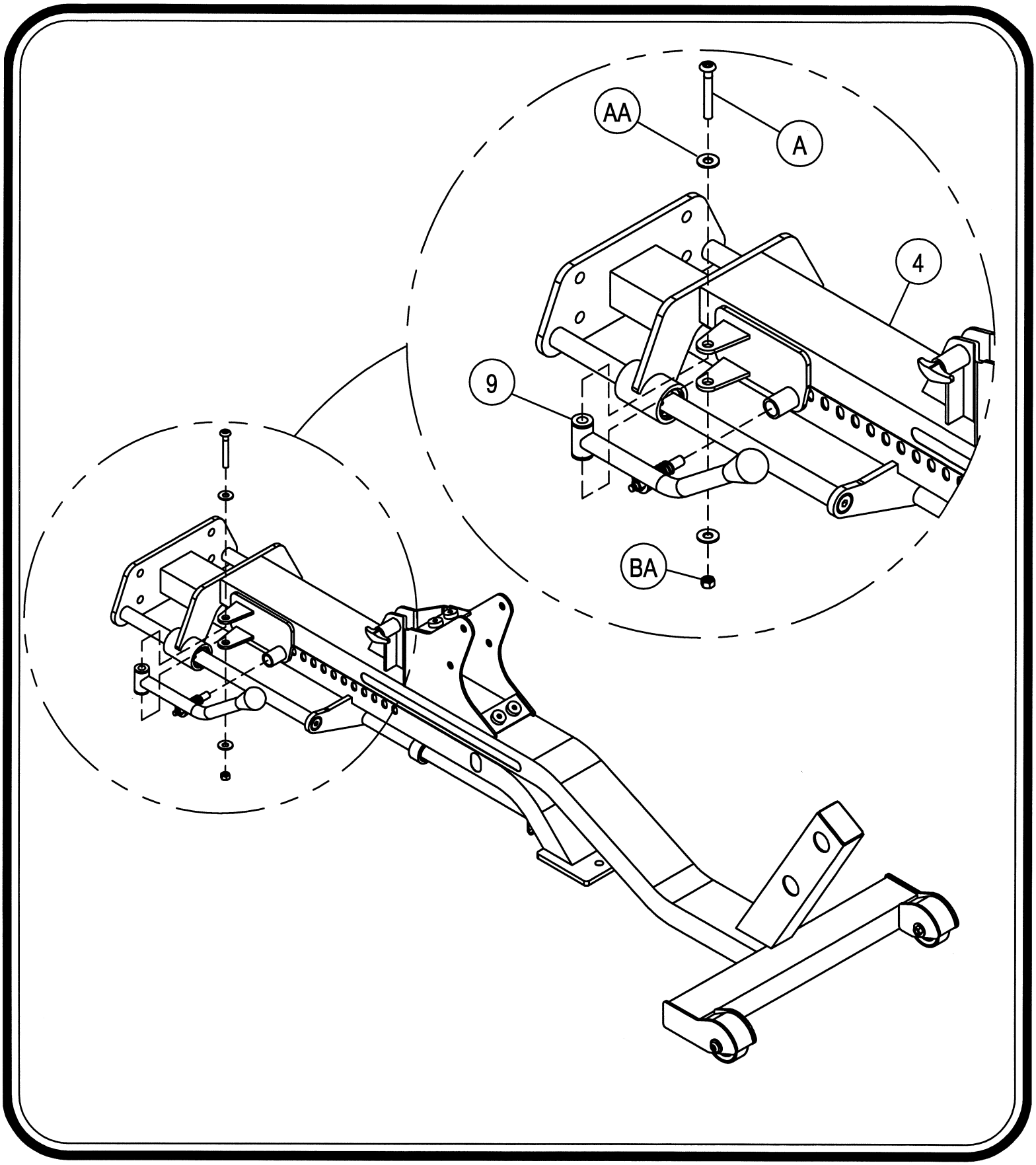
AA
A
4
9
BA

Step 2d

FRAME ASSEMBLY

In step 1 start assembly by sliding (16) into (8). Next attach (8) and (15) to (4) as shown. In Step 2, slide another (16) into (2) and attach (2) to (4) as shown. In Step 3, slide (16)'s into (2) and (8). Next attach (3) to (2) and (8). Wrench tighten bolts then back nuts off enough so (2), (3), and (8) pivots freely.

Part Descriptions

2 - Back Adjuster assembly
3 - Pivoting Seat Mount Assembly
4 - Base Frame
8 - Linkage Assembly
15 - Decal Plate
16 - Ø.75" x 3.598" Axle

Hardware Descriptions

H - 1/2-13 x 4 1/2" BHS (WZ)
AA - 1/2" Flat Washer (WZ)
BA - 1/2" Thin Nylok Nut (WZ)

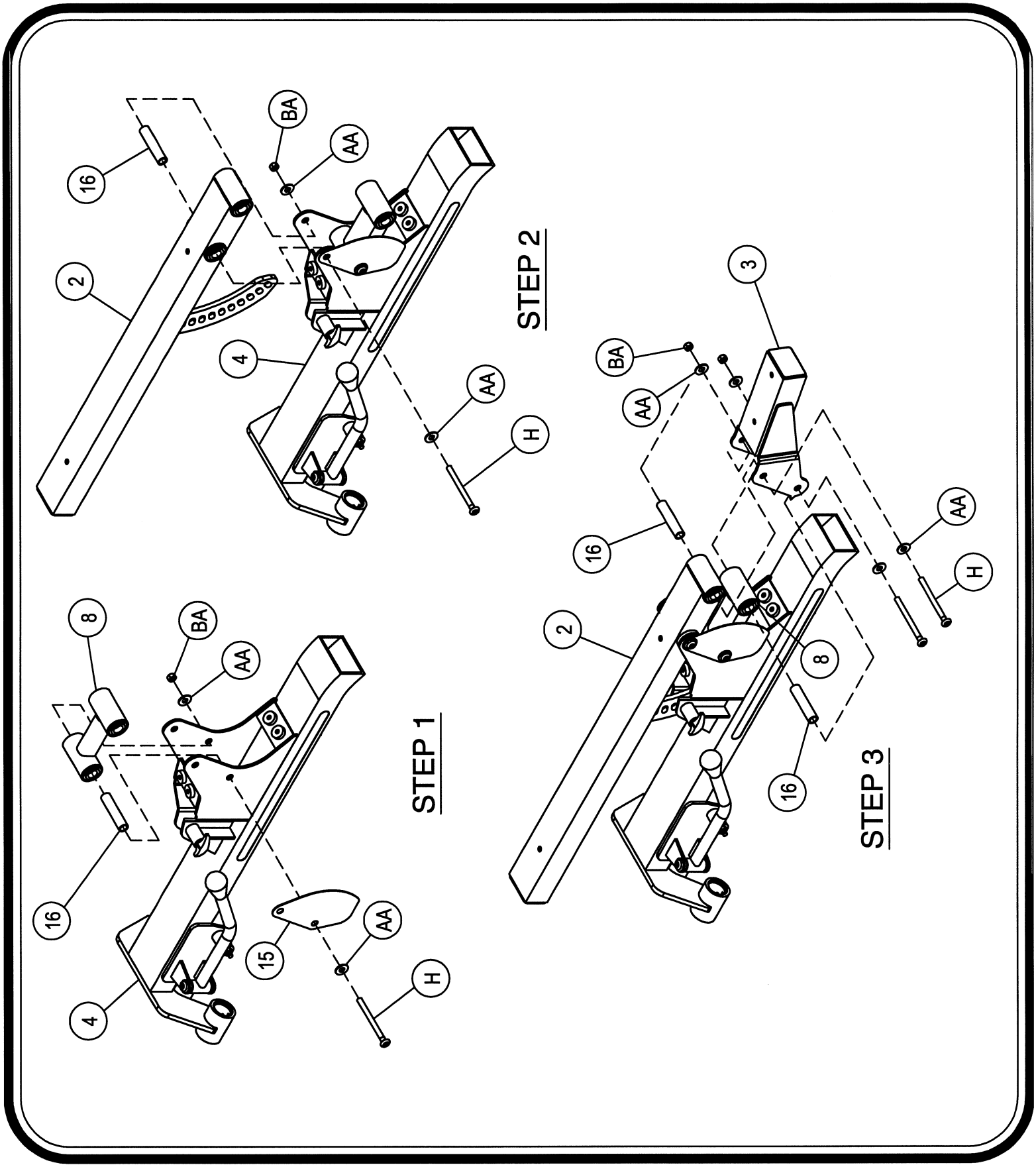
STEP 1
8
BA
AA
16
15
AA
H
4
STEP 2
16
BA
AA
2
4
AA
H
STEP 3
3
BA
AA
16
2
8
16
AA
H

Step 2e

FRAME ASSEMBLY

Start assembly by attaching (10) to (2) and attach (11) to (3). Wrench tighten bolts.

Part Descriptions

2 - Back Adjuster assembly
3 - Pivoting Seat Mount Assembly
10 - Back Pad Assembly
11 - Seat Pad Assembly

Hardware Descriptions

C - 5/16-18 x 3" BHS (WZ)
AC - 5/16" Flat Washer (WZ)
AD - 5/16" Internal Lock Washer (WZ)

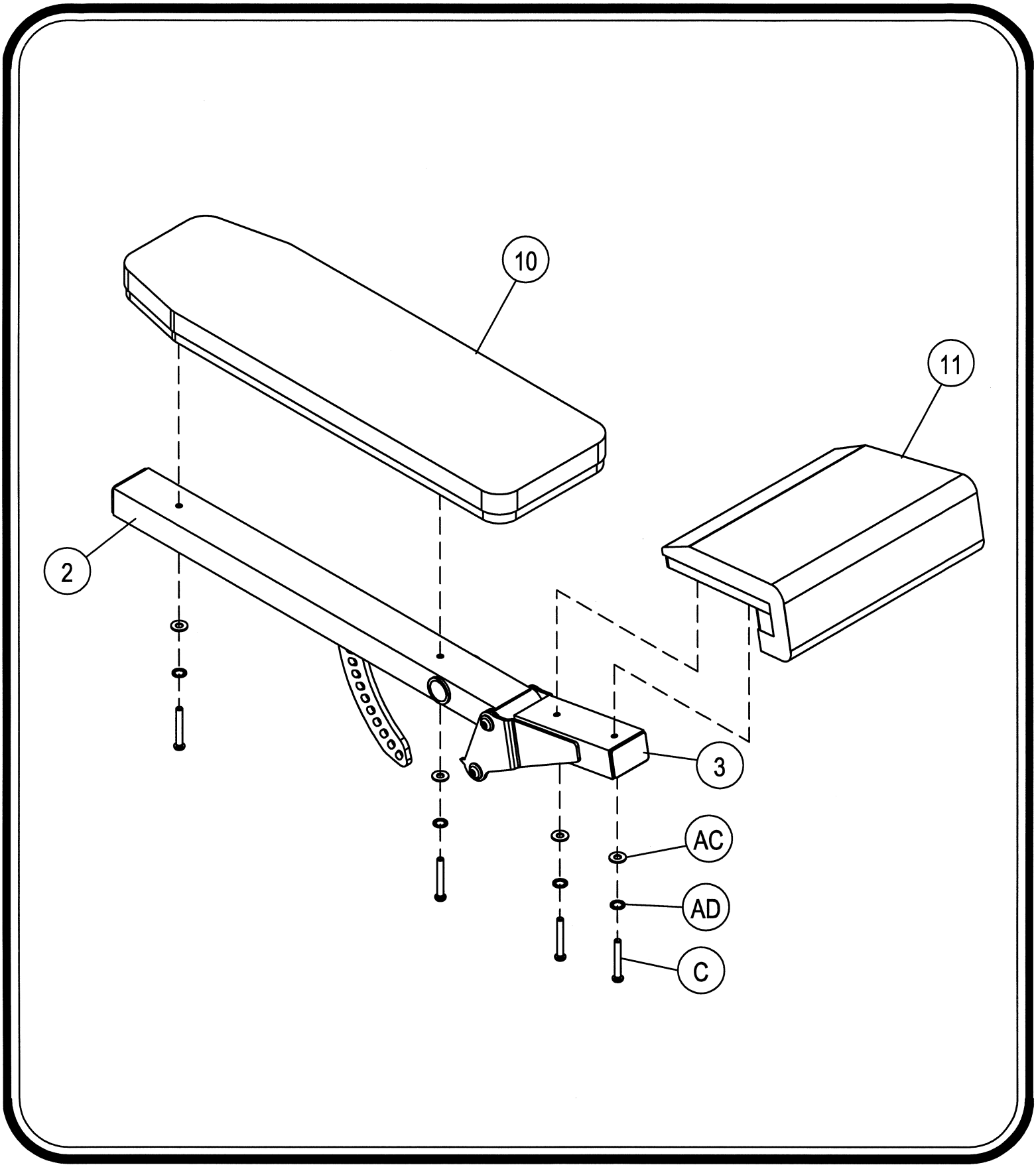
10
11
2
3
AC
AD
C

Step 2f

FRAME ASSEMBLY

Start on one side of the bench by attaching (12) to (7). Next slide (14)'s, and (18)'s into (7) and secure. Make sure the short side of (14)'s, and (18)'s are inward as shown. Now slide (CB)'s onto both sides of (14)'s, and (18)'s as shown. Repeat the same procedured to the opposite side. Next slide (13)'s into (4) and secure. Attach (17), and (21) to (6). Wrench tighten bolts.

Part Descriptions

- 4 - Base Frame
- 7 - Upright Stand Assembly
- 12 - Gun Rack
- 13 - Foot Peg
- 14 - Weight Peg
- 17 - Aluminum Deck Plate
- 21 - Aluminum Deck Plate

Hardware Descriptions

- D - 3/8-16 x 3" BHS (WZ)
- E - 3/8-16 x 1 3/4" BHS (WZ)
- K - 3/8-16 x 4 3/4" FHS (WZ)
- L - 3/8-16 x 2 3/4 FHS (WZ)
- AB - 3/8" Flat Washer (WZ)
- AE - 3/8" Internal Lock Washer (WZ)
- BC - 3/8" Nylok Nut (WZ)
- CB - Weight Bumper

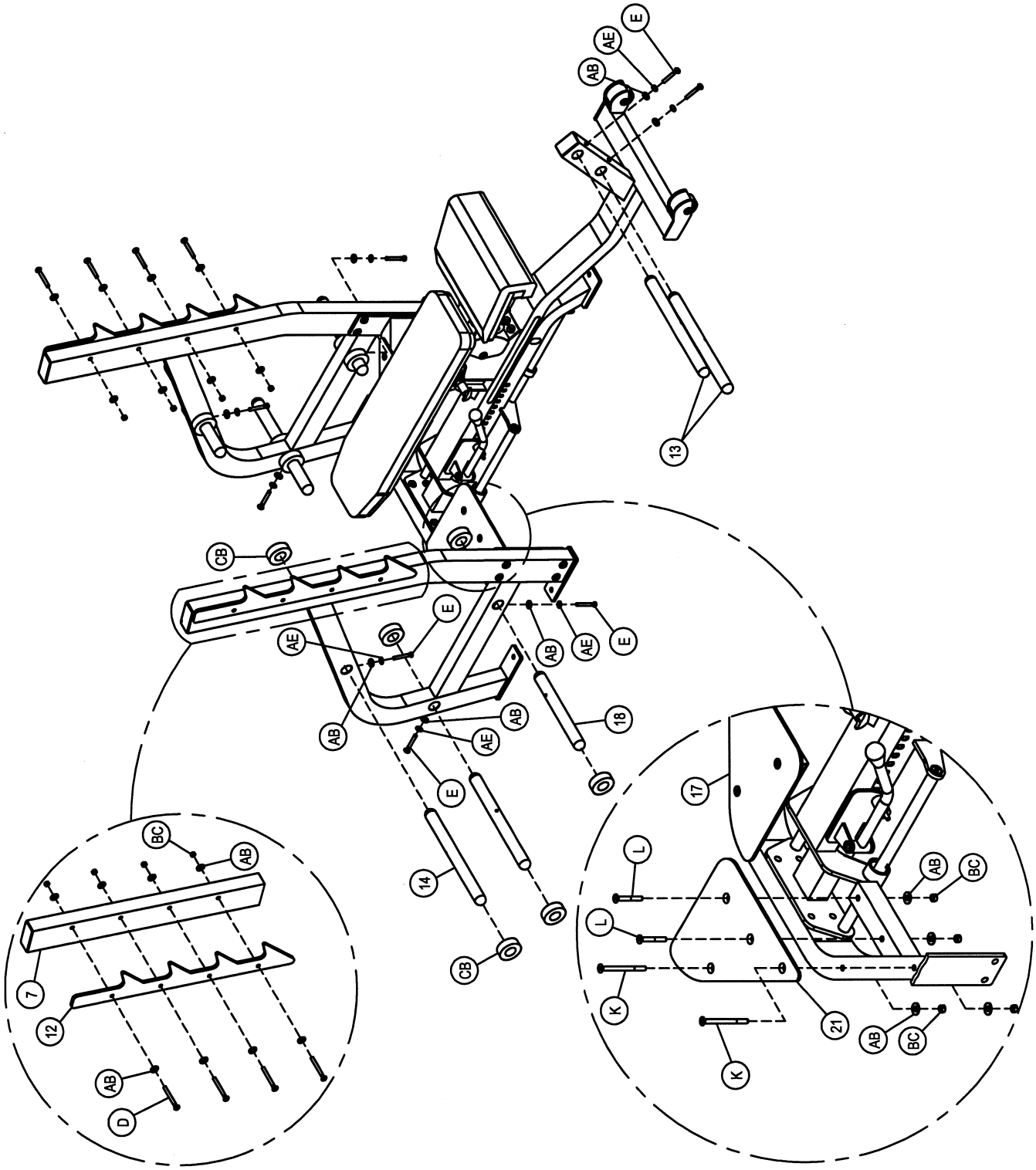
NOTES: DUPLICATE ASSEMBLY FOR THE OTHER SIDE
REPEAT PROCESS FOR (17).
(SHOWN ASSEMBLED FOR CLARITY.)
E
AE
AB
13
CB
18
17
14
7
12
D
BC
L
K
21

PRE-ASSEMBLY

Part Descriptions

2 - Back Adjuster Assembly
3 - Pivoting Seat Mount Assembly
4 - Base Frame
6 - Cross Base Assembly
7 - Upright Stand Assembly
8 - Linkage Assembly
9 - Handle Assembly

Hardware Descriptions

B - 5/16-18 x 2 3/4" Button Head Screw
AC -5/16" USS Flat Washer
AF - 5/16 SAE Flat Washer
BB - 5/16" Nylok Nut
CA - Ø3.00" Polyurethane Wheel
CC - 2" x 4" Flat End Cap
CD - 2" x 3" Flat End Cap
CF - 2" x 3" Elliptical End Cap
CG - Knob Handle
CH - Ø1.375 Black Delrin
CJ - 0.75" Flanged Bearing
CK - 1/2" Oillite
CL - Plug Bumper
CM - Wheel Axle
CR - Pull Pin
CS - Spring
CT - Pull Pin Nut
CW - 2" X 2" Flat End Cap
CX - Plastic Bushing
CY - C-Clip
CZ - T-Handle
DA - Pullpin Hex Head Cap
DB - Lee Spring
DC - Heavy Duty Pullpin Plunger

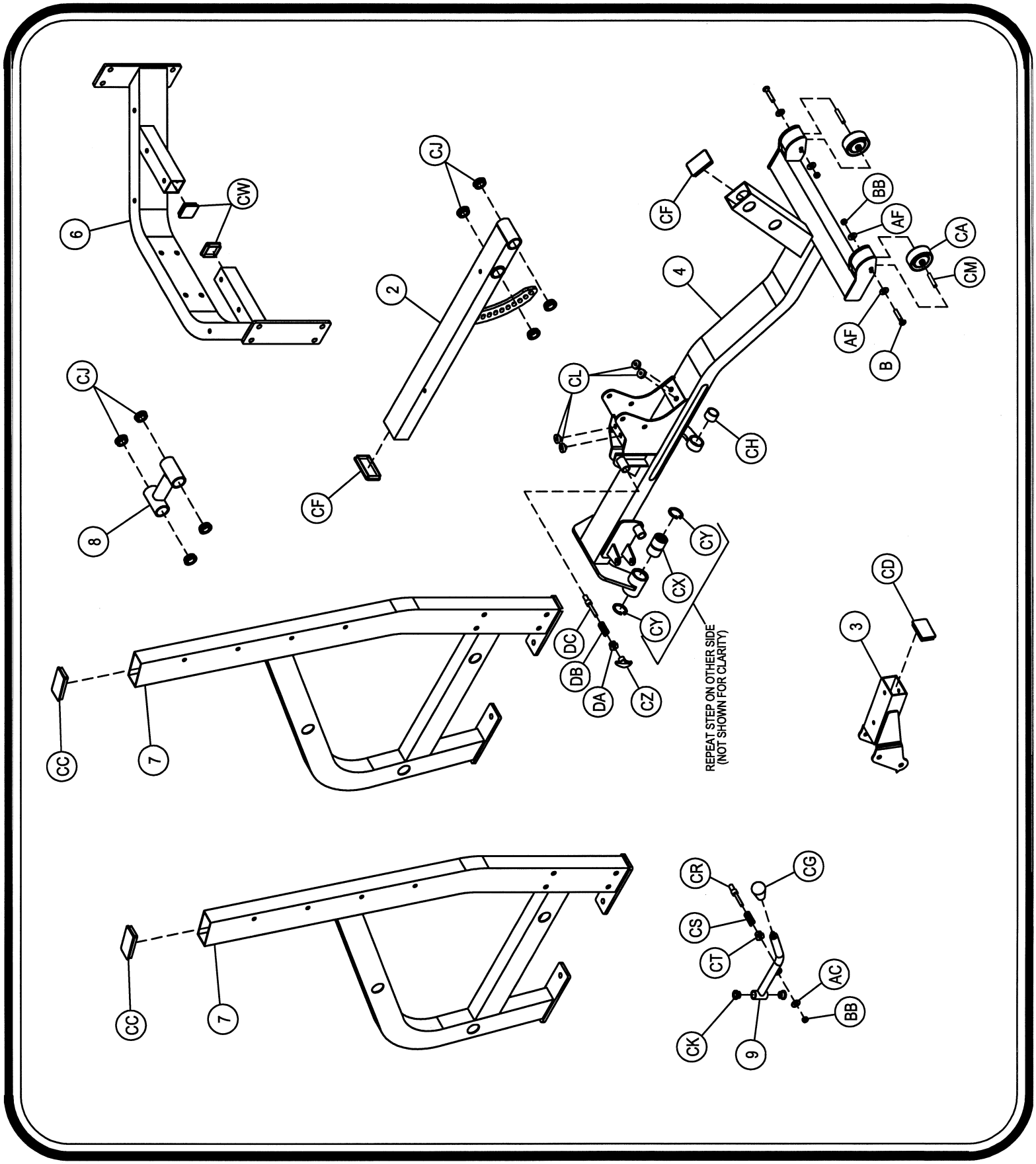
6
CW
CJ
2
CF
CJ
8
CC
7
CC
7
CF
4
CL
CH
CY
CX
CY
DC
DB
DA
CZ
REPEAT STEP ON OTHER SIDE
(NOT SHOWN FOR CLARITY)
BB
AF
CA
CM
AF
B
CD
3
CR
CG
CS
CT
AC
BB
CK
9

IMPORTANT

Now that the CF2179B Olympic Bench is completely assembled take time to assure that your unit is assembled square and perpenduclar. If the bench are not square and perpendicular, it will be necessary to loosen some frame hardware to re-align the frame and retighten bolts.

PART LISTING

Key#	Qty.	Part Number	Description
2	1	026-01X1378	Back Adjuster Assembly
3	1	026-01X1381	Pivoting Seat Mount Assembly
4	1	026-01X1382	Base Frame
5	1	026-01X1393	Base Mount Assembly
6	1	026-01X1394	Cross Brace Assembly
7	2	026-01X1395	Upright Stand Assembly
8	1	026-01X1396	Linkage Assembly
9	1	026-01X1397	Handle Assembly
10	1	022-01PD0104-A	Back Pad Assembly
11	1	022-01PD0105-A	Seat Pad Assembly
12	2	026-01P1377	Gun Rack
13	2	026-01M0475	Foot Peg
14	4	026-01M0476	Weight Peg
15	1	026-01P1422	Decal Plate
16	4	026-01M0753	Ø.75" x 3.598" Axle
17	1	026-01P1659	.25" Aluminun Deck Plate
18	2	026-01M0844	Weight Peg
19	2	026-01G0180	Ø25mm x 468.08mm Guide Rod
20	1	026-01G0181	Ø25mm x 434.97mm Guide Rod
21	1	026-01P1660	.25" Aluminum Deck Plate

HARDWARE LISTING

NOTE: SOME OF THESE PARTS MAY COME PRE-INSTALLED

Key#	Qty.	Part Number	Description
A	13	011-0101019	1/2-13 x 3" BHS (WZ)
B	2	011-0101068	5/16-18 x 2 3/4" BHS (WZ)
C	4	011-0101033	5/16-18 x 3" BHS (WZ)
D	8	011-0101048	3/8-16 x 3" BHS (WZ)
E	8	011-0101034	3/8-16 x 1 3/4" BHS (WZ)
H	4	011-0101079	1/2-13 x 4 1/2" BHS (WZ)
J	4	011-0102002	1/2-13 x 1" FHS (WZ)
K	4	011-0303012	3/8-16 x 4 3/4" FHS (WZ)
L	4	011-0303013	3/8-16 x 2 3/4" FHS (WZ)
M	1	011-0101034	3/8-16 x 1 1/4" BHS (WZ)
AA	34	013-0102003	1/2" Flat Washer (WZ)
AB	33	013-0102010	3/8" Flat Washer (WZ)
AC	4	013-0002004	5/16" USS Flat Washer (WZ)
AD	4	013-0102021	5/16" Internal Lock Washer (WZ)
AE	9	013-0102010	3/8" Internal Lock Washer (WZ)
AF	5	013-0002001	5/16" SAE Flat Washer (WZ)
BA	17	012-0304011	1/2" Thin Nylok Nut (WZ)
BB	3	012-0102006	5/16" Nylok Nut (WZ)
BC	16	012-0304004	3/8" Nylok Nut (WZ)
CA	2	020-0014026	Ø3.00 Polyurethane Wheel
CB	12	026-01PL264	Weight Bumper
CC	3	06-0192	2" x 4" Flat End Cap
CD	1	06-0108	2" x 3" Flat End Cap
CF	2	06-0193	2" x 3" Elliptical End Cap
CG	1	020-0007004	Knob Handle
CH	1	026-01PL379	Ø1.375 Black Delrin
CJ	8	014-0005001	0.75" Flanged Bearing
CK	2	014-0101004	1/2" Oil Lite
CL	4	06-0536	Plug Bumper
CM	2	014-0016006	Wheel Axle
CR	1	026-01M128-3	Pull Pin
CS	1	020-0011009	Spring
CT	1	026-01M128-1	Pull Pin Nut
CU	4	026-01PL296	Rectangular Rubber Foot Pad
CV	2	026-01PL195	Square Rubber Foot Pad
CW	2	016-0201012	2" x 2" Flat End Cap
CX	2	014-0016016	Plastic Bushing
CY	4	014-0015016	C-Clip Ø43.5mm x 1.75mm T
CZ	1	026-01PL138	T-Handle
DA	1	026-01M0846	Pullpin Hex Head Cap
DB	1	020-0011009	Lee Spring
DC	1	026-01M0845	Heavy Duty Pullpin Plunger

ABBREVIATION LISTING

BZ = Black Zinc

WZ = White Zinc

FHS = Flat Head Screw

BHS = Button Head Screw

SHS = Socket Head Screw

HHB = Hex Head Bolt

5/16" HEX BOLT

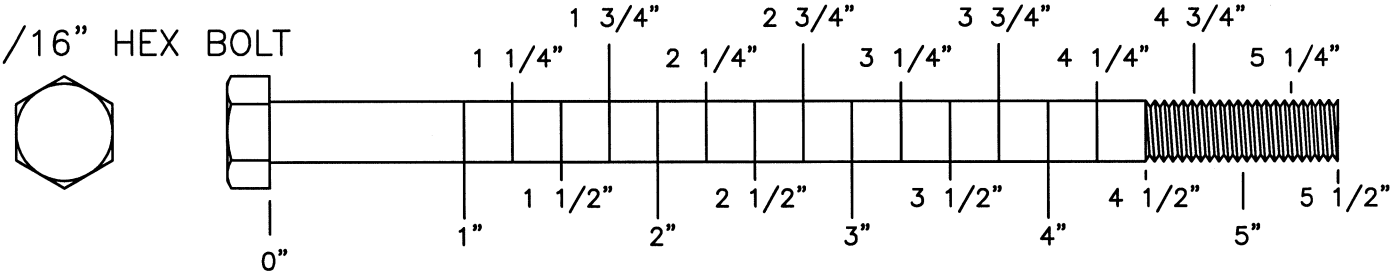

3/8" HEX BOLT

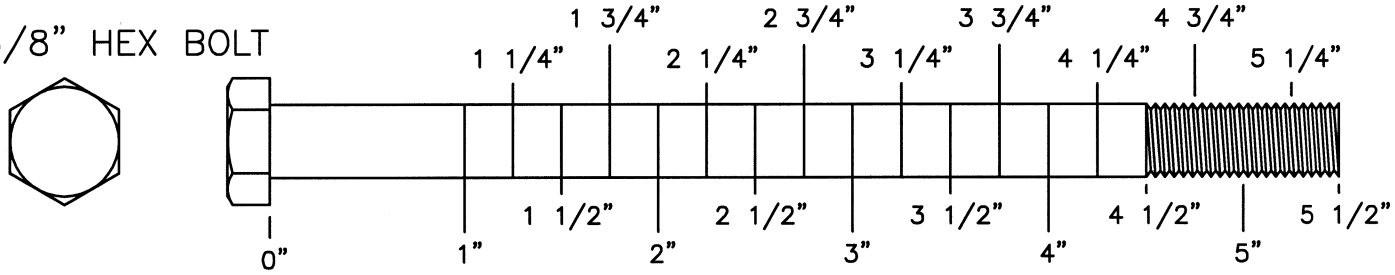

1/2" HEX BOLT

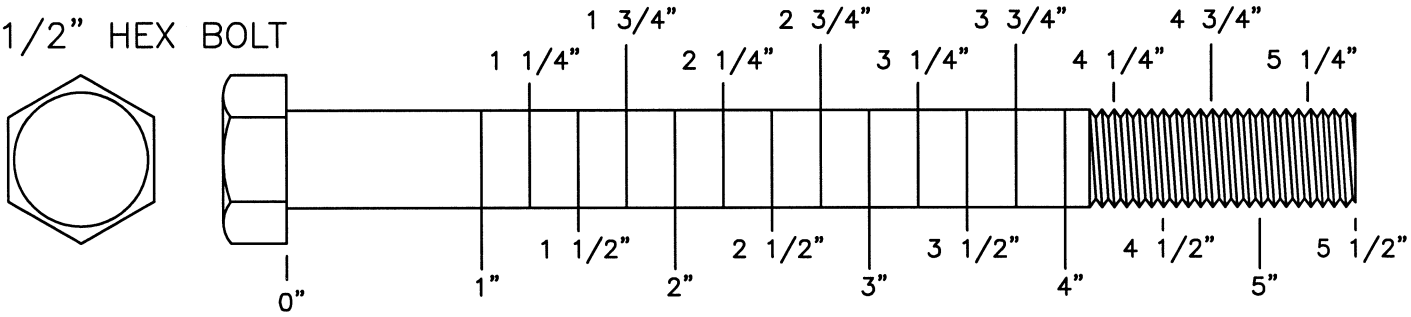

1/2" SHOULDER BOLT

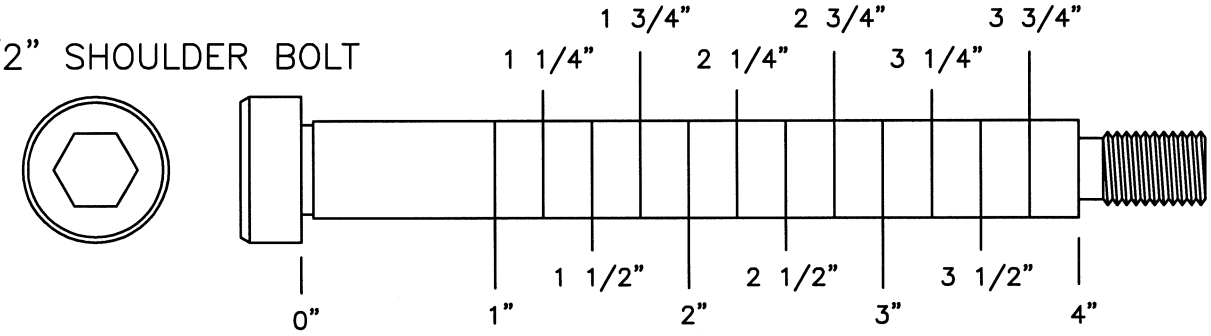

3/8" FLATHEAD
SOCKET CAP SCREW

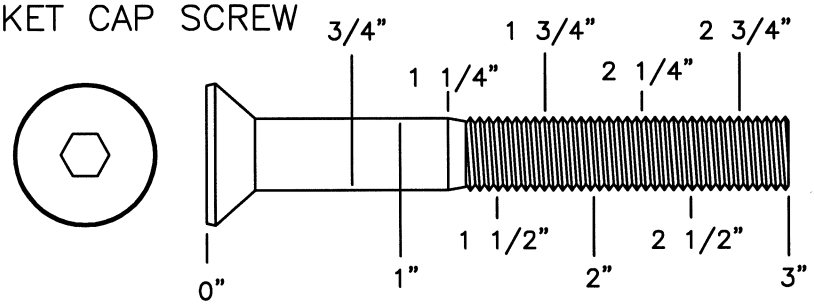

3/8" SOCKET
CAP SCREW

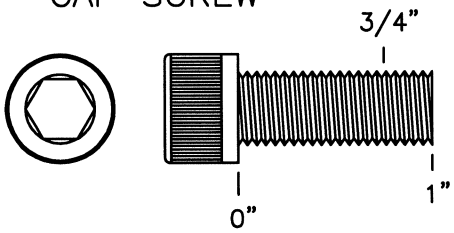

3/8" BUTTON
HEAD CAP SCREW

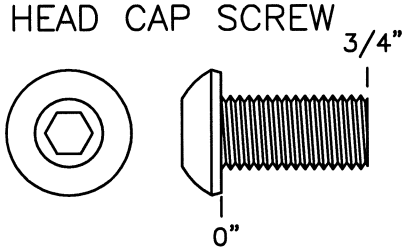

1/4" HEX
BOLT

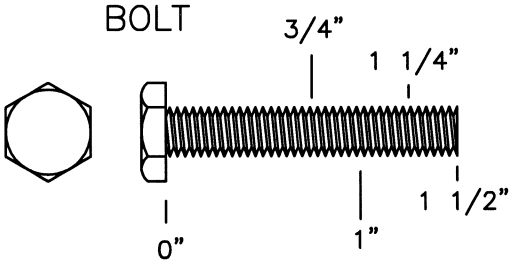

1/2" FLATHEAD
SOCKET CAP SCREW

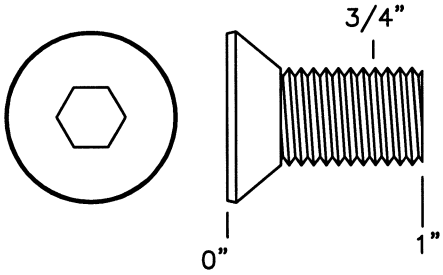

5/16"
FLAT WASHER
LARGE, USS, 25mm

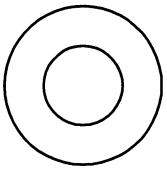

3/8"
FLAT
WASHER

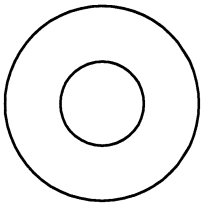

1/2"
FLAT WASHER
SMALL, SAE, 26mm

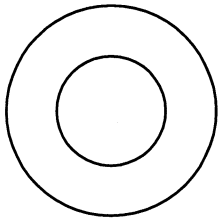

1/2"
FLAT WASHER
LARGE, USS, 34mm

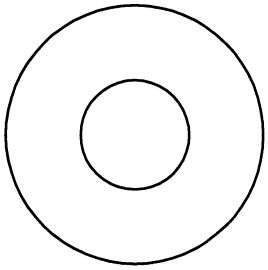

1/4"
LOCK WASHER

3/8"
LOCK WASHER

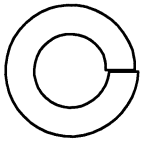

1/2"
LOCK WASHER

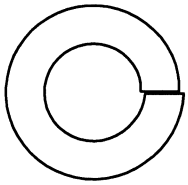

1" SHIM WASHER

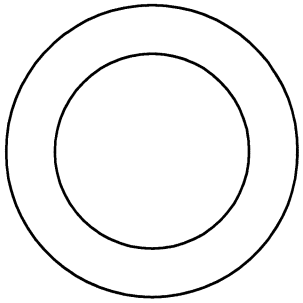

3/8" FENDER WASHER

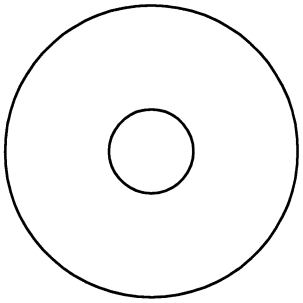

1 1/16"
FENDER WASHER

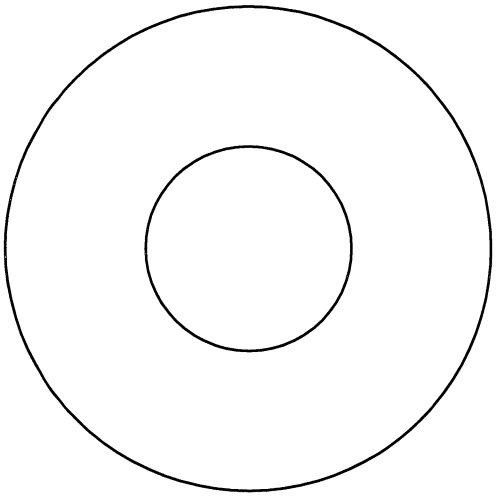

PLASTIC 1 1/16"
FENDER WASHER

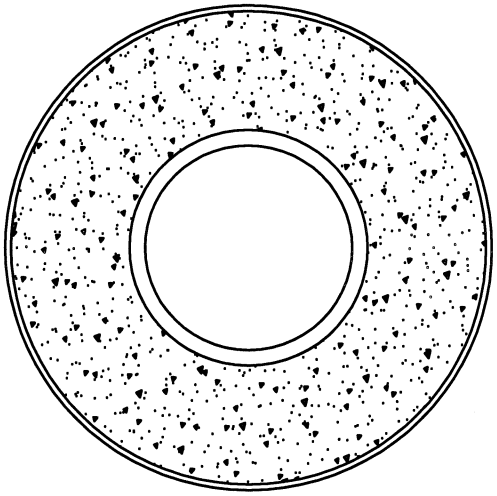

1/4" LONG
FLANGED SPACER

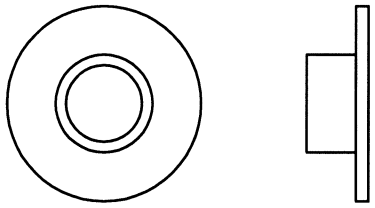

1/2" LONG
FLANGED SPACER

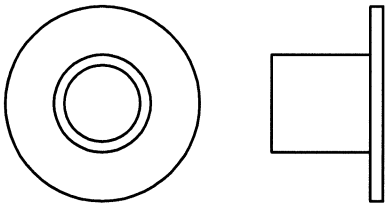

1/4" LONG HEAVY
FLANGED SPACER

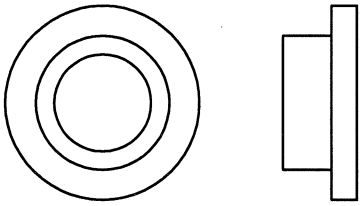

11/16" LONG HEAVY
FLANGED SPACER

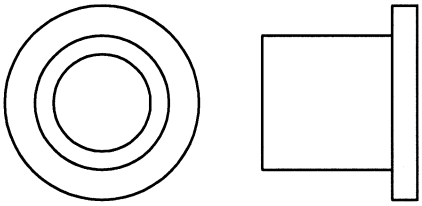

1" LONG HEAVY
FLANGED SPACER

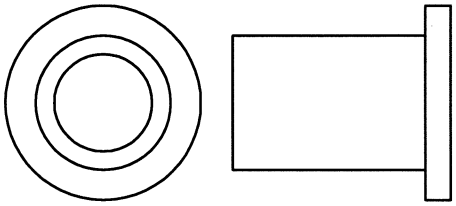

1/2" LONG
SPACER

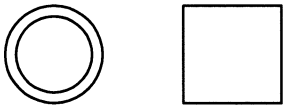

1" LONG
SPACER

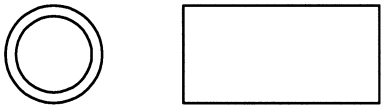

1 3/8" ALUMINUM
FLATHEAD CAP

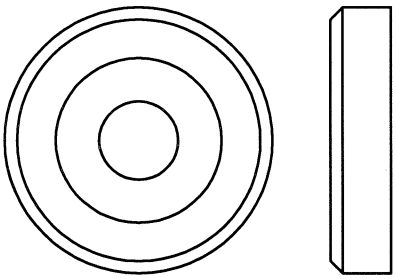

1 5/8" ALUMINUM
FLATHEAD CAP

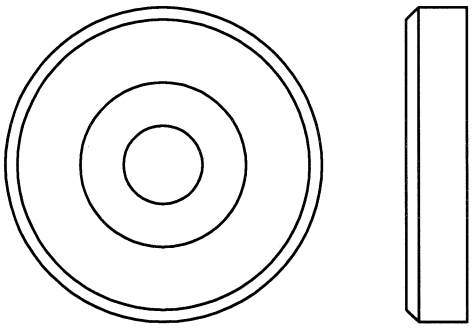

WEIGHT TRAINING TIPS

Always consult your physician before starting any exercise program.

Hoist equipment is designed to maximize your time spent working out. Having an exercise routine planned out in advance will allow you to get the most benefit out of the time spent exercising, and will also enable you to work all the major muscle groups.

Warm up properly before engaging in weight resistance training. Stretching, yoga, jogging, calisthenics or other cardiovascular exercise can help prepare your body for the heavier workload of lifting weights.

Learn how to perform the exercise correctly before using heavy weight. Correct form is important to avoid injury and to ensure that you work the proper muscle groups.

Know your limitations. If you are new to weight training or are embarking on an exercise regimen after a long layoff, start slowly and build foundational strength over a longer period of time.

Pay attention to your breathing. Exhale when you exert is a general rule of thumb. Never hold your breath.

WEIGHT TRAINING EXERCISE LOG

S = Sets R = Repetition per set W = Weight used

| Date | | |

DECAL PLACEMENTS

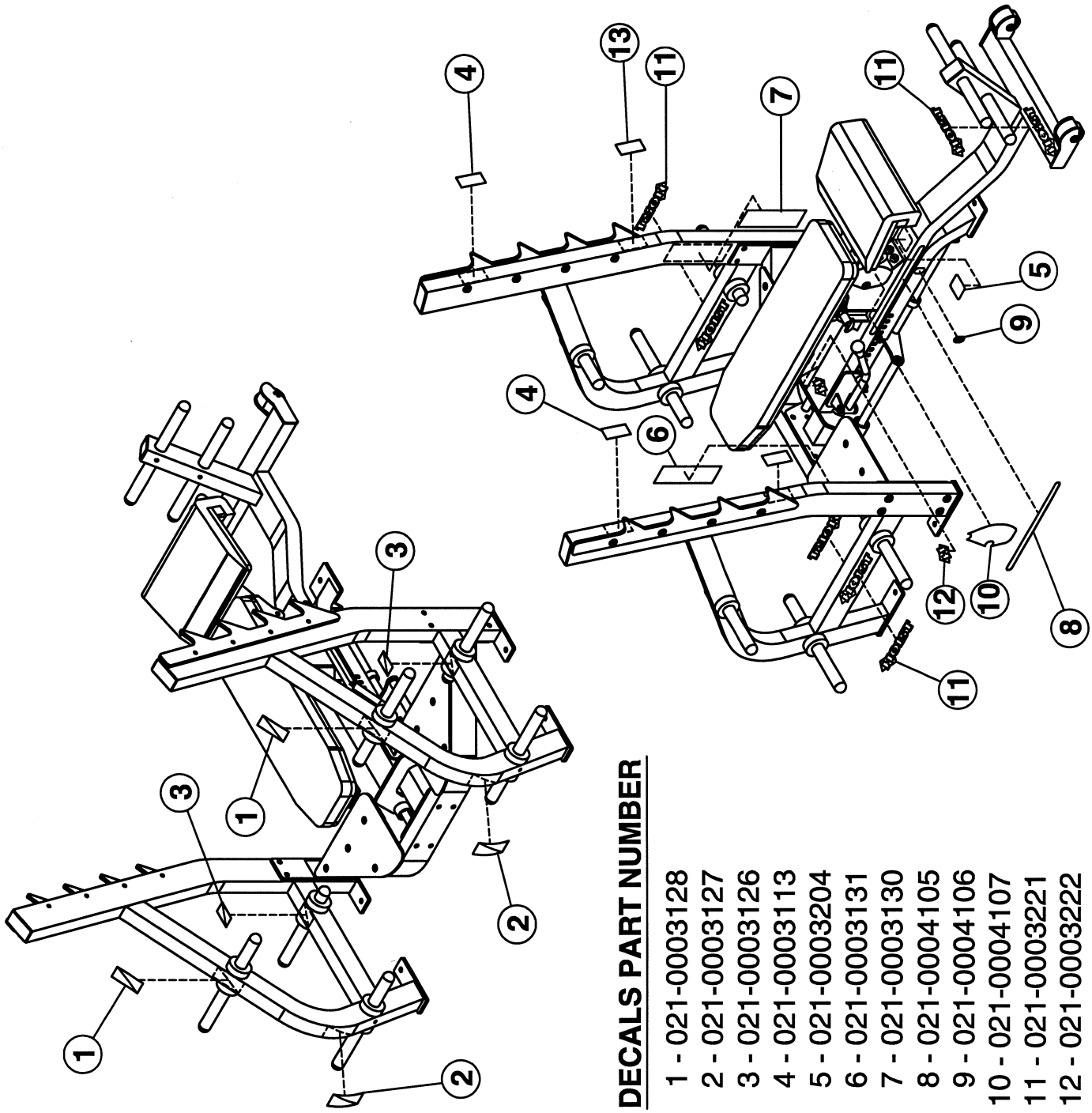

DECALS PART NUMBER

1 - 021-0003128
2 - 021-0003127
3 - 021-0003126
4 - 021-0003113
5 - 021-0003204
6 - 021-0003131
7 - 021-0003130
8 - 021-0004105
9 - 021-0004106
10 - 021-0004107
11 - 021-0003221
12 - 021-0003222
13 - 021-0003282

DECAL REFERENCE

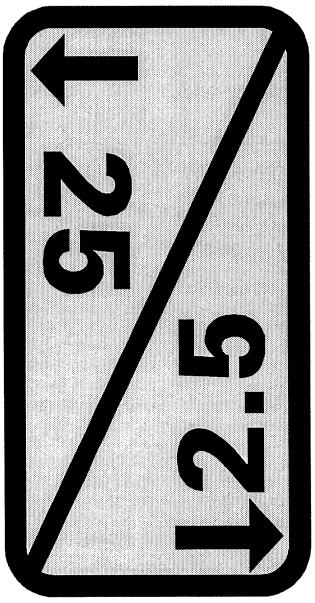

021-0003126

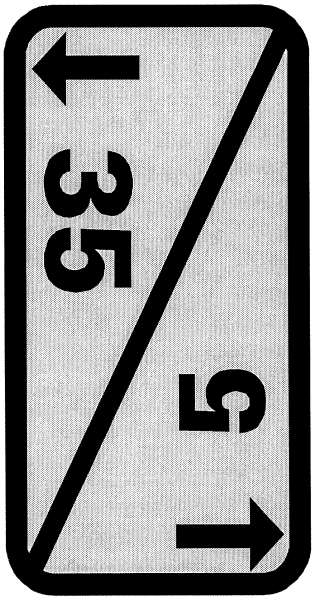

021-0003127

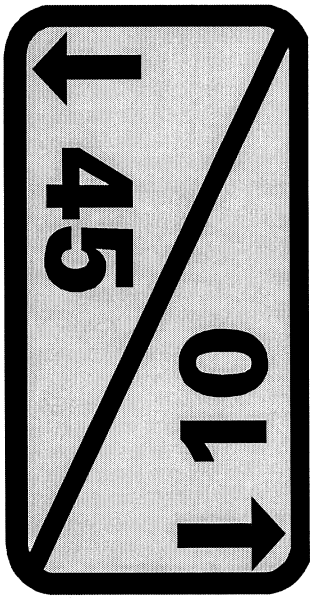

021-0003128

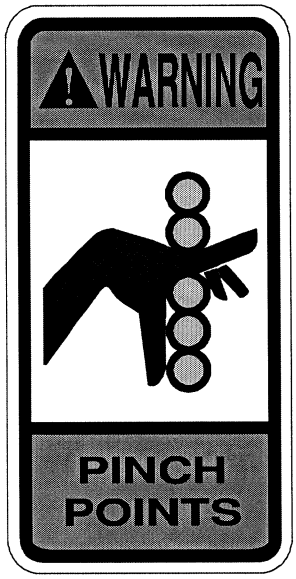

021-0003113

021-0003204

021-0003222

DECAL REFERENCE

NOTICE

COMMERCIAL MAINTENANCE	Daily	Weekly	Monthly	6 Months	Yearly
Inspect; Links, Pull Pins, Snap Locks, Swivels, Weight Stack Pins	X				
Clean; Upholstery	X				
Inspect; Cables or Belts and their tension	X				
Inspect; Accessory Bars and Handles		X			
Inspect; All Decals		X			
Inspect; All Nuts and Bolts, Tighten if Needed		X			
Inspect; Anti- Skid Surfaces		X			
Clean & Lubricate; Guide Rods with a Teflon (PTFE) based lubricant (Superlube)			X		
Lubricate; Seat Sleeves, Turcite Bushings, Linear Bearings			X		
Clean and Wax; All Glossy Finishes				X	
Repack with Grease; Linear Bearings				X	
Replace; Cables, Belts and Connecting Parts					X

021-0003131

WARNING

USE ONLY GENUINE HOIST REPLACEMENT PARTS. FAILURE TO DO SO WILL VOID WARRANTY AND COULD RESULT IN PERSONAL INJURY OR EVEN DEATH. THERE IS A RISK ASSUMED BY INDIVIDUALS WHO USE THIS TYPE OF EQUIPMENT. TO MINIMIZE THE RISK ALWAYS FOLLOW THESE SIMPLE RULES.

1. READ & UNDERSTAND ALL ENCLOSED INSTRUCTIONS before using this equipment.

2. INSPECT EQUIPMENT BEFORE EACH USE. Replace all parts at the first signs of wear or damage. If in doubt about a certain part, DO NOT use the equipment until the part is replaced. Failure to replace worn or damaged parts may result in injury.

3. FOLLOW ROUTINE MAINTENANCE SCHEDULE

4. CONSULT YOUR PHYSICIAN BEFORE STARTING ANY EXERCISE PROGRAM. Warm up properly before engaging in weight resistance training. Stop exercising if you feel faint or dizzy.

5. TO PREVENT THE POSSIBILITY OF SERIOUS INJURY, KEEP CLEAR OF ALL MOVING PARTS. Do not attempt to free any jammed part by yourself. Obtain assistance in order to avoid possible injury.

6. Take your time and do not rush the exercise. Practice proper breathing. NEVER hold your breath.

7. CHILDREN SHOULD NOT BE ALLOWED TO USE THIS EQUIPMENT. To avoid possible injury, children should be kept at a safe distance when this equipment is in use. Teenagers should not use this equipment without adult supervision.

8. CALL YOUR AUTHORIZED HOIST DISTRIBUTOR if you have any questions on the proper use or maintenance of this equipment.

021-0003130

DECAL REFERENCE

1 2 3 4 5 6 7 8 9 10 11 12 13 14 15 16

021-0004105

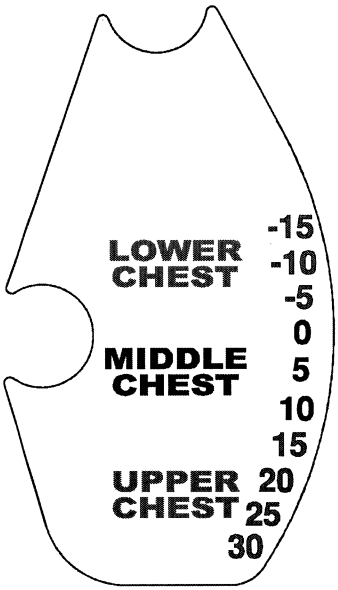

021-0004107

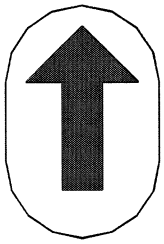

021-0004106

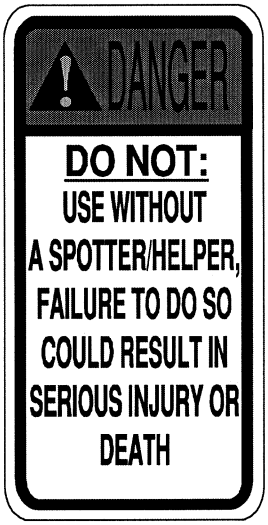

021-0003282

021-0003221

MAINTENANCE SCHEDULE

ROUTINE	COMMERCIAL MAINTENANCE	HOME MAINTENANCE	LATEST DATE ENTRY								
Inspect; Links, Pull Pins, Snap Locks, Swivels, Weight Stack Pins	DAILY	WEEKLY									
Clean; Upholstery	DAILY	WEEKLY									
Inspect; Cables or Belts and their tension	DAILY	WEEKLY									
Inspect; Accessory Bars, and Handles	WEEKLY	3 MONTHS									
Inspect; All Decals	WEEKLY	3 MONTHS									
Inspect; All Nuts and Bolts, Tighten if needed	WEEKLY	3 MONTHS									
Inspect; Anti-Skid Surface	WEEKLY	3 MONTHS									
Clean & Lubricate; Guide Rods with a Teflon (PTFE) based lubricant (Superlube)	MONTHLY	3 MONTHS									
Lubricate; Seat Sleeves, Turcite Bushings, Linear Bearing	MONTHLY	3 MONTHS									
Clean and Wax; All Glossy Finishes	6 MONTHS	YEARLY									
Repack with Grease; Linear Bearings	6 MONTHS	YEARLY									
Replace; Cables, Belts and Connecting Parts	YEARLY	3 YEARS									

Your equipment comes with a commercial maintenance decal.
For personal, in home use, please follow the home maintenance schedule listed above.

HOIST FITNESS SYSTEMS
GENERAL MAINTENANCE INFORMATION

Links, Pull-Pins, Snap Locks, Swivels, Weight Stack Pins:

**Check all pieces for signs of visible wear or damage.*

**Check springs in snap hooks and pull-pins for proper tension and alignment.*

**If the spring sticks or has lost its rigidity, replace it immediately.*

Upholstery:

**To ensure prolonged upholstery life and proper hygiene, all upholstered pads should be wiped down with a damp cloth after every workout.*

**Periodically take the time to use a mild soap or an approved vinyl upholstery cleaner to deter the onset of cracking or drying. Avoid using any abrasive cleaners or cleaners not intended for use on vinyl.*

**Replace ripped or warn upholstery immediately.*

**Keep sharp or pointed objects clear of all upholstery.*

Guide Rods:

**Wipe clean with a dust free rag. Lubricate once a week with a Silicon or Teflon based lubricant.*

Decals:

**Inspect and familiarize yourself with any safety warnings or other user information posted on each decal.*

Nuts and Bolts:

**Inspect all nuts and bolts for any loosening and tighten if needed.*

**Go through a re-tightening sequence periodically to ensure that all hardware is tensioned proper.*

Anti-Skid Surfaces:

**These surfaces are designed to supply secure footing and need to be replaced if they appear worn or become slippery.*

Belts and Cables:

**Hoist uses only high quality belt, and mil-spec cables.*

**Visually inspect the belts and cables for fraying, cracking, peeling or discoloration.*

**While the machine is not in use, carefully run your fingers along the belt or cable to feel for thinning or bulging areas.*

**Replace belts and cables immediately at the first signs of damage or wear. Do not use equipment until belts or cables have been replaced.*

GENERAL MAINTENANCE INFORMATION
(CONTINUED)

Belt and Cable Tension:

**Referring to the Owners Manual, when belts or cables are used check all bolts attachments to be sure they are properly attached.*

**Check slack in cables and re-adjust cable tension if needed.*

Seat Sleeves, Turcite Bushings:

**Wipe down adjusting tubes with a dust free rag before applying lubricant.*

**Lubricate seat sleeves and turcite bushings with a Silicon or Teflon based lubricant spray.*

Linear Bearings:

**Referring to the Owners Manual carefully dis-assemble the bearing from its housing and place a finger full of light grease (lithium, super lube, etc.) into the inside of the bearing. Using your finger, press the grease into the ball-bearings and their tracks. repeat until the ball-bearing tracks are full of grease. Insert the shaft back into the bearing and wipe off excess grease.*

PLEASE KEEP THIS FOR YOUR RECORDS

HOIST FITNESS SYSTEMS
LIMITED LIFETIME WARRANTY

Hoist Fitness Systems warrants this product to the **original purchaser** to be free from defects in workmanship and/or materials under normal use or service. If at any time a component part is defective, Hoist Fitness Systems shall repair or replace it (at Hoist Fitness Systems option) within a reasonable period of time. This warranty does not cover costs of removal, transportation or reinstallation. This warranty shall not apply if the defect was caused by misuse, neglect or normal wear and tear.

WARRANTY CLAIMS. All claims require: Model number, Serial number, Date of installation, and any information supporting the existence of the alleged defect.

To complete Warranty Registration visit:
www.HOISTFITNESS.com
and click on the Warranty Registration link

Starting from the original date of purchase, normal wear and tear shall be considered as the following:

COMMERCIAL USE: All malfunctions of upholstery, grips, and coatings that occur up to one year; all malfunctions of belts, or cables up to one year; all malfunctions of pulleys, bearings, or bushings that occur up to three years. The frame and body components are warranted for ten years, with structural moving parts warranted for five years.

LIGHT COMMERCIAL USE: All malfunctions of upholstery, grips, and coatings that occur up to one year; all malfunctions of belts, or cables up to one year; all malfunctions of pulleys, bearings, or bushings that occur up to three years. The frame and body components are warranted for ten years, with structural moving parts warranted for five years.

HOME USE: All malfunctions of grips, paint, and chrome that occur up to ten years; all malfunctions of electronic components, belts, cables, or upholstery that occur up to ten years; all malfunctions of pulleys, bearings, or bushings that occur up to ten years. The frame and all welded components are warranted for the life of the product.

PLEASE NOTE THAT NOT ALL HOIST PRODUCTS ARE MADE FOR COMMERCIAL USE. Refer to the instructions page of your owners manual or consult with you fitness product dealer to establish if a product is made for commercial use or not. Using a non-commercial product in a commercial setting can result in serious injury or death! Hoist Fitness Systems sole responsibility shall be to repair or replace the component within the terms stated above. Hoist Fitness Systems shall not be liable for any loss or damage of any kind including any incidental or consequential damages resulting, directly or indirectly from any warranty expressed or implied or any other failure of this product.

LIGHT COMMERCIAL USE: Our Light Commercial warranty applies to facilities that **DO NOT** charge monthly membership dues and where the equipment would be used by **no more than 50** people per day. Examples of Light Commercial facilities include hotels, apartment complexes, personal training studios, fire stations, police stations, etc., that meet the criteria stated above.

WHAT IS NOT COVERED BY THIS WARRANTY: Hoist's sole obligation under this warranty is limited to either repair or replacement of parts, subject to the additions below. This warranty neither assumes nor authorizes any person to assume obligations other than expressly covered by this warranty.

NO CONSEQUENTIAL DAMAGES: Hoist is not responsible for economic loss; profit loss; or special, indirect, or consequential damages.

WARRANTY IS NOT TRANSFERABLE: This warranty is not assignable and applies only in favor of the original purchaser/user to whom delivered. Any such assignment or transfer shall void the warranties herein made and shall void all warranties, expressed, implied or statutory, except the one (1) and five (5) year warranties described above. These warranties are exclusive and in lieu of all other warranties, including implied warranty and merchantability or fitness for a particular purpose. There are no warranties which extend beyond the description on the face hereof.

TRANSPORTATION COSTS: Hoist will accept parts covered under this warranty freight collect, provided that shipment has received prior approval. Hoist is not responsible for any other transportation costs, but will ship freight collect parts either repaired or replaced under these warranties.

Hoist Fitness Systems
11900 Community Rd.
Poway, CA. 92064
(800)548-5438

PLEASE KEEP THIS FOR YOUR RECORDS