TUFFSTUFF FITNESS INTERNATIONAL

OWNER'S MANUAL

Maintenance & Assembly Instructions

IMPORTANT: KEEP THIS MANUAL FOR FUTURE REFERENCE

⚠ WARNING

Read and understand the Owner's Manual, all danger, warning and caution labels before using this equipment.

*Shown with AXT-RIG Cable Outrigger Arms (Sold separately)

AXT-225

Deluxe Home Gym

AXT-225_Rev1
Revision Date 12-17-2015

Table of Contents

OVERHEAD SPECIFICATIONS ..... Page 3
DANGER, WARNING, & CAUTION LABELS INFORMATION ..... Page 4-9
IMPORTANT SAFETY INSTRUCTIONS ..... Page 10-11
REGISTRATION, SERVICE & ASSEMBLY ..... Page 12
INSPECTION/MAINTENANCE ..... Page 13
CABLE INSPECTION ..... Page 14
STEP 1-6 ..... Page 15-20
STEP 7 LAT CABLE ROUTING ..... Page 21
STEP 8 ABDOMINAL CABLE ROUTING ..... Page 22-23
STEP 9 ANTI-TWIST CABLE ROUTING ..... Page 24
STEP 10 LEG EXTENSION/CURL CABLE ROUTING ..... Page 25
IMPORTANT NOTE ..... Page 26
STEP 10 TENSION CABLE ROUTING ..... Page 27
STEP 12-15 ..... Page 28-31
PARTS LIST ..... Page 32-33
PRE ASSEMBLED COMPONENTS ..... Page 34-37
BASIC EXERCISE GUIDE ..... Page 38-39
WARRANTY ..... Page 40

TuffStuff Fitness International Inc. continually engages in research related to product improvements. Please take the time to carefully read through this owner's manual thoroughly. Instructions contained in this owner's manual are not intended to cover all details or variations possible with equipment, or to cover every contingency that may be met in conjunction with assembly, installation, operation, maintenance or troubleshooting of the equipment. Even though we have prepared this owner's manual with extreme care, neither the manufacturer nor the author can accept responsibility for any errors in, or omission from, the information given. Should additional information be required, or should situations arise that are not covered by this owner's manual, the matter should be directed to Customer Service at TuffStuff Fitness International Inc. in Chino, California.

OVERHEAD SPECIFICATIONS

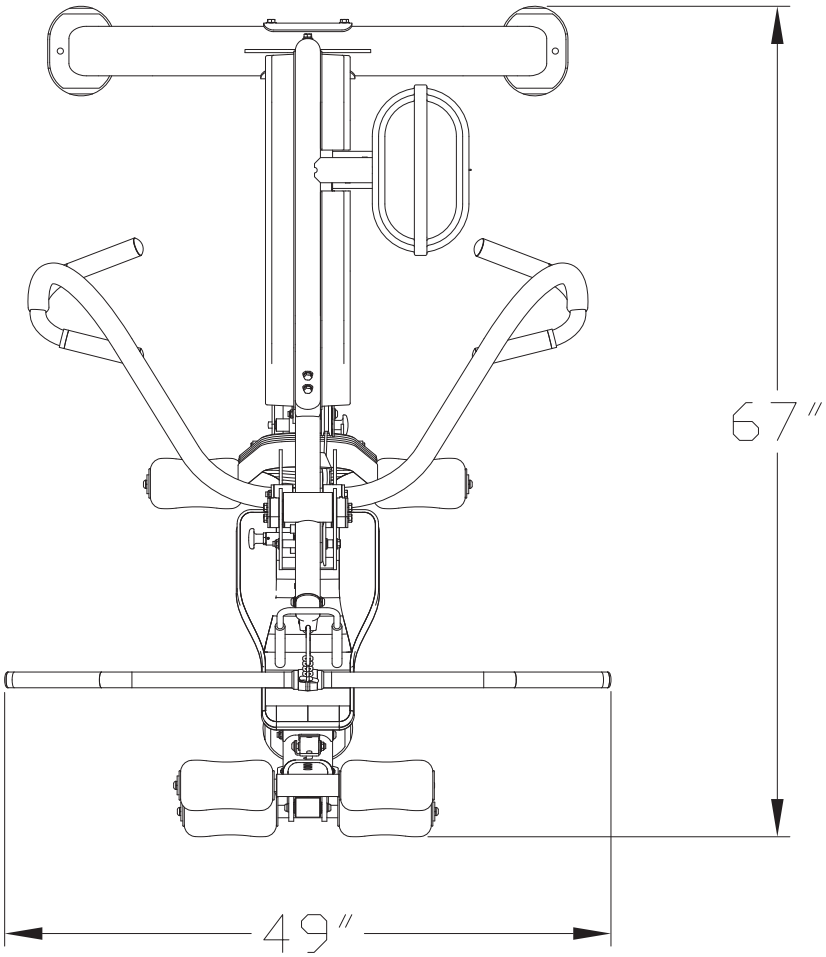

L 67″ X W 49″ X H 84″
PRODUCT WEIGHT 480 lbs.
MAX-LOAD WEIGHT LIMIT - 200 lbs.

Carefully read ALL Danger, Warning & Caution labels posted on the machine

142

WARNING

DO NOT Use for Chinning
(Lat bar holder only)

BNH2923

127

131

IMPORTANT

CHECK CABLES
Be sure cables run between the pulleys and working properly.

BNH3113

138

INSPECTIONS

Home Use Only Recommended Inspection	DAILY	WEEKLY	MONTHLY	6-MONTH
INSPECT: Links, pull-pins, snap locks, swivels, connectors, selector pin, and welded-joints.	X			
CLEAN: Upholstery with lanolin-base cleaner. Do not use Windex.	X			
INSPECT: Cables and tension (adjust if needed).	X			
INSPECT: All labels		X		
INSPECT: All nuts and bolts (tighten if needed).		X		
INSPECT: Accessory bars, handles, rubber grips.		X		
INSPECT: All anti-skid surfaces.		X		
CLEAN & LUBRICATE: Clean guide rods with Super Lube® spray lubricant and lubricate with Super Lube® (PTFE) grease.			X	
LUBRICATE: Seat sleeves, pull-pin sliding mechanism, bushings and linear bearings.			X	
CLEAN & WAX: All powder-coat finishes.				X

Use only genuine TuffStuff replacement parts. Failure to do so will void warranty and could result in serious injury or death.

TuffStuff Fitness International
Chino, CA 91710, USA
www.tuffstuffitness.com

BNH3155

125

WARNING

Serious injury or death can occur if these rules are not followed:

Home Use Only

1. **Read and Understand the Owner's Manual,** all danger, warning and caution labels before using this equipment. If you need further assistance, call TuffStuff.
2. **Obtain a medical examination** before beginning any form of exercise program.
3. **Stop exercising** if you feel faint or dizzy. Call for help if you are experiencing pain.
4. **Inspect equipment** prior to use for wear and tear, loose fittings, worn or frayed cables and frame welds. Do not attempt to fix or free any jammed parts yourself. Call your TuffStuff Dealer.
5. **Use this equipment** only for the intended use and for exercises shown in the exercise label.
6. **Keep body, clothing and hair** clear from all moving parts.
7. **Children must not be allowed** near this machine. Teenager must be supervised.
8. **Make sure** the selector pin is fully inserted. Use only the factory selector pin provided.
9. **Do not modify** weight stack with any add-on weights.
10. **Do not remove** any labels on the machine. Replace if damaged.

TuffStuff Fitness International
Chino, CA 91710, USA.

BNH3157

136

IMPORTANT

ADJUST
Cable Tension Here

BNH2924

143

WARNING

Keep body, hands and fingers clear of all moving parts.

BNH2926

136

IMPORTANT

ADJUST
Cable Tension Here

BNH2924

89

WARNING

Keep body, hands and fingers clear of all moving parts

BNH2908

Carefully read ALL Danger, Warning & Caution labels posted on the machine

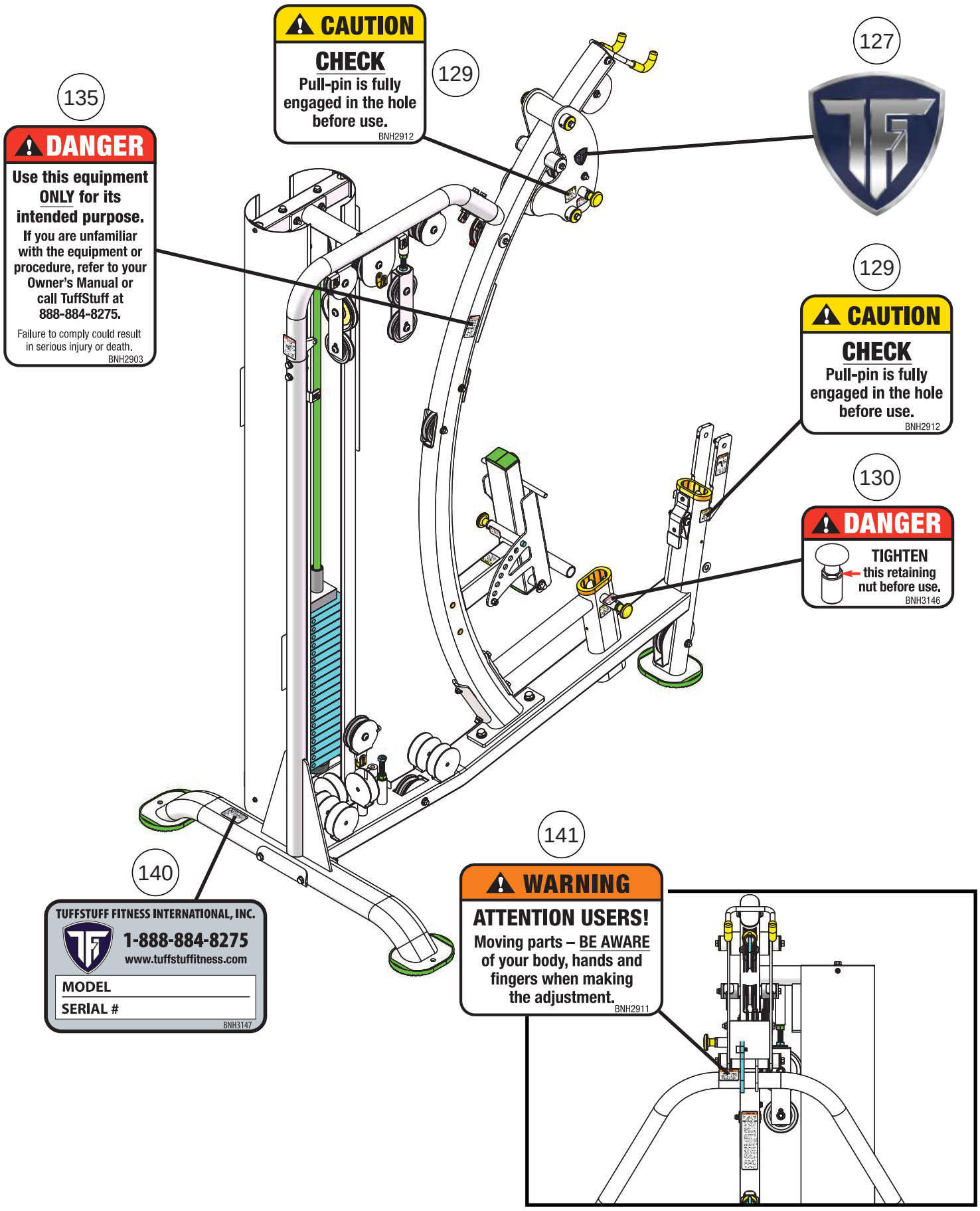

Carefully read ALL Danger, Warning & Caution labels posted on the machine

34

WARRANTY

HOME LIFETIME*

For the **LIFE** of the product while owned by the original purchaser from defects in material and workmanship.

***This warranty does not cover:**

1. TuffStuff products sold for and used in a commercial or institutional environment.
2. Any misuse, neglect, abuse, improper assembly & maintenance, or failure to follow instructions or warnings in the Owner's Manual and warning labels posted on the machines.
3. Use of this apparatus in a manner for which it was not designed.
4. Original product that is altered, or the use of replacement parts and components parts of another manufacturer other than TuffStuff.

All warranty periods begin to run from the date of purchase to the original purchaser. The obligation of TuffStuff under this warranty is limited to repairing or replacing warranted defective parts, as TuffStuff may elect, at TuffStuff's facility in Chino, California, without charge to the Purchaser for either parts or labor. Purchaser is responsible for installation of repaired or replaced parts, and all transportation and insurance costs to and from TuffStuff's facility in Chino. For a detailed copy of the warranty, please contact:

TuffStuff Fitness International
Chino, CA 91710, USA
www.tuffstuffitness.com

BNH3156

136

IMPORTANT

ADJUST
Cable Tension Here

BNH2924

123

137

IMPORTANT

For smooth performance, clean guide rods with Super Lube® spray lubricant and lubricate with Super Lube® (PTFE) grease.

BNH2925

98

CAUTION

Adjust LEVELER to the floor surface for stability.

BNH3119

132

IMPORTANT

For smooth performance, lubricate all gliding surfaces with silicone spray lubricant.

BNH2916

124

DANGER

Do Not REMOVE This Safety Bolt.

BNH2906

128

TOP PLATE 10 lbs.	TOP PLATE 4.5 kgs.
20 lbs.	9.1 kgs.
30 lbs.	13.6 kgs.
40 lbs.	18.1 kgs.
50 lbs.	22.7 kgs.
60 lbs.	27.2 kgs.
70 lbs.	31.8 kgs.
80 lbs.	36.3 kgs.
90 lbs.	40.8 kgs.
100 lbs.	45.4 kgs.
110 lbs.	49.9 kgs.
120 lbs.	54.4 kgs.
130 lbs.	59.0 kgs.
140 lbs.	63.5 kgs.
150 lbs.	68.0 kgs.
160 lbs.	72.6 kgs.
170 lbs.	77.1 kgs.
180 lbs.	81.6 kgs.
190 lbs.	86.2 kgs.
200 lbs.	90.7 kgs.

Carefully read ALL Danger, Warning & Caution labels posted on the machine

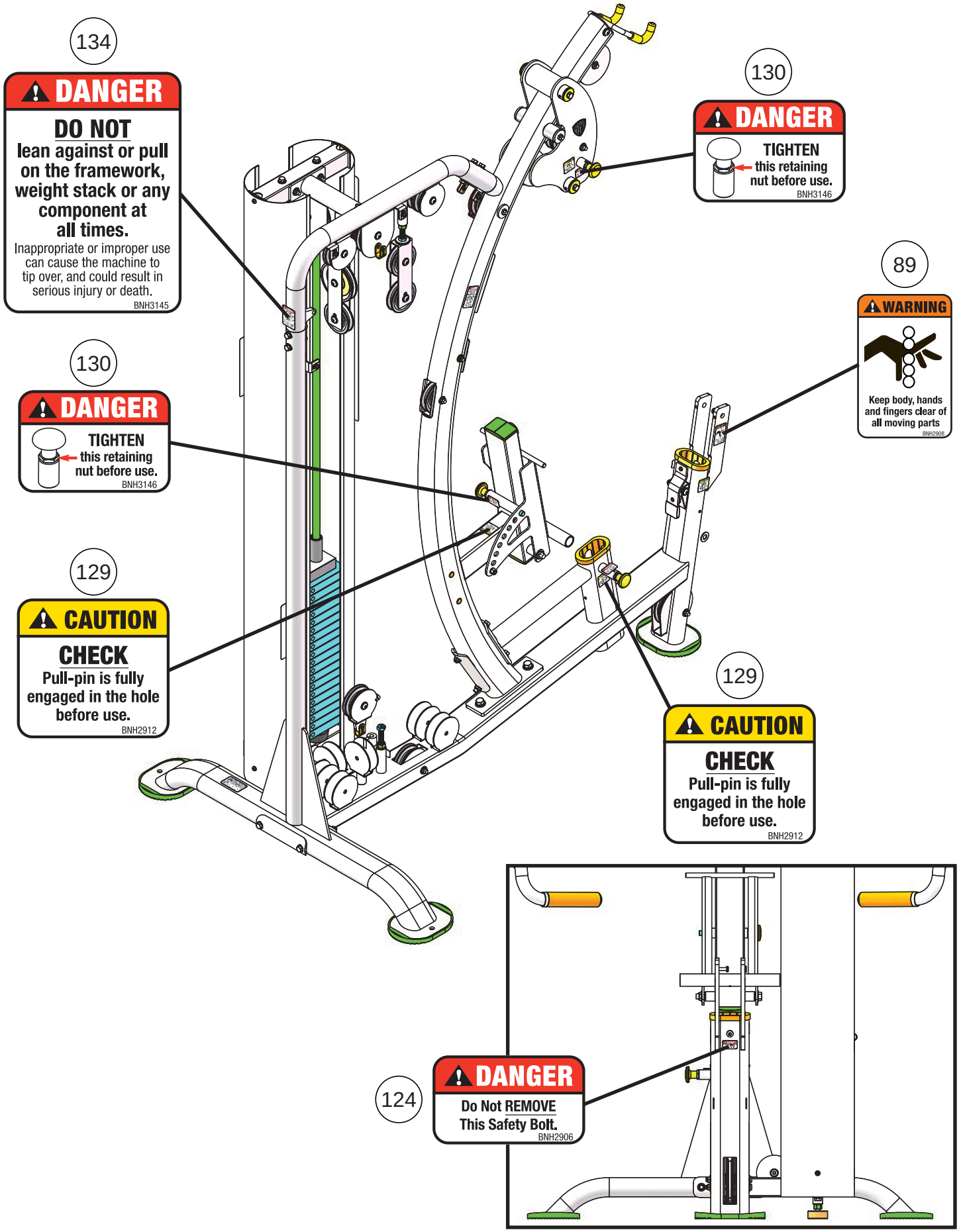

34

WARRANTY

HOME LIFETIME*

For the **LIFE** of the product while owned by the original purchaser from defects in material and workmanship.

***This warranty does not cover:**

1. TuffStuff products sold for and used in a commercial or institutional environment.
2. Any misuse, neglect, abuse, improper assembly & maintenance, or failure to follow instructions or warnings in the Owner's Manual and warning labels posted on the machines.
3. Use of this apparatus in a manner for which it was not designed.
4. Original product that is altered, or the use of replacement parts and components parts of another manufacturer other than TuffStuff.

All warranty periods begin to run from the date of purchase to the original purchaser. The obligation of TuffStuff under this warranty is limited to repairing or replacing warranted defective parts, as TuffStuff may elect, at TuffStuff's facility in Chino, California, without charge to the Purchaser for either parts or labor. Purchaser is responsible for installation of repaired or replaced parts, and all transportation and insurance costs to and from TuffStuff's facility in Chino. For a detailed copy of the warranty, please contact:

TuffStuff Fitness International
Chino, CA 91710, USA
www.tuffstuffitness.com

BNH3156

125

WARNING

Serious injury or death can occur if these rules are not followed:

Home Use Only

1. **Read and Understand the Owner's Manual,** all danger, warning and caution labels before using this equipment. If you need further assistance, call TuffStuff.
2. **Obtain a medical examination** before beginning any form of exercise program.
3. **Stop exercising** if you feel faint or dizzy. Call for help if you are experiencing pain.
4. **Inspect equipment** prior to use for wear and tear, loose fittings, worn or frayed cables and frame welds. Do not attempt to fix or free any jammed parts yourself. Call your TuffStuff Dealer.
5. **Use this equipment** only for the intended use and for exercises shown in the exercise label.
6. **Keep body, clothing and hair** clear from all moving parts.
7. **Children must not be allowed** near this machine. Teenager must be supervised.
8. **Make sure** the selector pin is fully inserted. Use only the factory selector pin provided.
9. **Do not modify** weight stack with any add-on weights.
10. **Do not remove** any labels on the machine. Replace if damaged.

TuffStuff Fitness International
Chino, CA 91710, USA.

BNH3157

138

INSPECTIONS

Home Use Only Recommended Inspection	DAILY	WEEKLY	MONTHLY	6-MONTH
INSPECT: Links, pull-pins, snap locks, swivels, connectors, selector pin, and welded-joints.	X			
CLEAN: Upholstery with lanolin-base cleaner. Do not use Windex.	X			
INSPECT: Cables and tension (adjust if needed).	X			
INSPECT: All labels		X		
INSPECT: All nuts and bolts (tighten if needed).		X		
INSPECT: Accessory bars, handles, rubber grips.		X		
INSPECT: All anti-skid surfaces.		X		
CLEAN & LUBRICATE: Clean guide rods with Super Lube® spray lubricant and lubricate with Super Lube® (PTFE) grease.			X	
LUBRICATE: Seat sleeves, pull-pin sliding mechanism, bushings and linear bearings.			X	
CLEAN & WAX: All powder-coat finishes.				X

Use only genuine TuffStuff replacement parts. Failure to do so will void warranty and could result in serious injury or death.

TuffStuff Fitness International
Chino, CA 91710, USA
www.tuffstuffitness.com

BNH3155

123

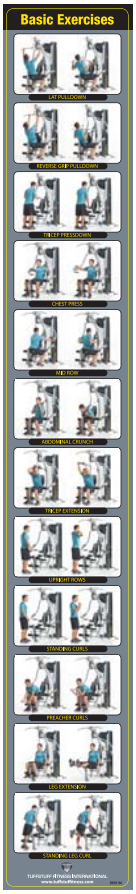

137

IMPORTANT

For smooth performance, clean guide rods with Super Lube® spray lubricant and lubricate with Super Lube® (PTFE) grease.

BNH2925

136

IMPORTANT

ADJUST
Cable Tension Here

BNH2924

132

IMPORTANT

For smooth performance, lubricate all gliding surfaces with silicone spray lubricant.

BNH2916

131

IMPORTANT

CHECK CABLES
Be sure cables run between the pulleys and working properly.

BNH3113

134

DANGER

DO NOT
lean against or pull on the framework, weight stack or any component at all times.

Inappropriate or improper use can cause the machine to tip over, and could result in serious injury or death.

BNH3145

135

DANGER

Use this equipment ONLY for its intended purpose.

If you are unfamiliar with the equipment or procedure, refer to your Owner's Manual or call TuffStuff at 888-884-8275.

Failure to comply could result in serious injury or death.

BNH2903

130

DANGER

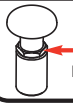

TIGHTEN this retaining nut before use.

BNH3146

124

DANGER

Do Not REMOVE This Safety Bolt.

BNH2906

140

TUFFSTUFF FITNESS INTERNATIONAL, INC.

1-888-884-8275
www.tuffstuffitness.com

MODEL _____

SERIAL # _____

BNH3147

Carefully read ALL Danger, Warning & Caution labels posted on the machine

142

WARNING

DO NOT Use for Chinning
(Lat bar holder only)

BNH2923

141

WARNING

ATTENTION USERS!
Moving parts – BE AWARE of your body, hands and fingers when making the adjustment.

BNH2911

143

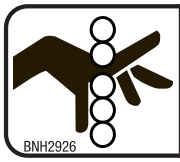

WARNING

Keep body, hands and fingers clear of all moving parts.

BNH2926

128

TOP PLATE 10 lbs.	TOP PLATE 4.5 kgs.
20 lbs.	9.1 kgs.
30 lbs.	13.6 kgs.
40 lbs.	18.1 kgs.
50 lbs.	22.7 kgs.
60 lbs.	27.2 kgs.
70 lbs.	31.8 kgs.
80 lbs.	36.3 kgs.
90 lbs.	40.8 kgs.
100 lbs.	45.4 kgs.
110 lbs.	49.9 kgs.
120 lbs.	54.4 kgs.
130 lbs.	59.0 kgs.
140 lbs.	63.5 kgs.
150 lbs.	68.0 kgs.
160 lbs.	72.6 kgs.
170 lbs.	77.1 kgs.
180 lbs.	81.6 kgs.
190 lbs.	86.2 kgs.
200 lbs.	90.7 kgs.

89

WARNING

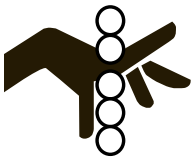

Keep body, hands and fingers clear of all moving parts

BNH2908

127

98

CAUTION

Adjust LEVELER to the floor surface for stability.

BNH3119

129

CAUTION

CHECK
Pull-pin is fully engaged in the hole before use.

BNH2912

114

BE ALERT!

THE FITNESS EQUIPMENT YOU HAVE JUST PURCHASED PRESENTS HAZARDS WHICH, IF NOT AVOIDED, COULD CAUSE SERIOUS INJURY OR DEATH.

Prior to using the equipment, READ the OWNER'S MANUAL thoroughly, all danger, warning & caution labels and instruction placards affixed to the machine.

If you are unsure on how to use the equipment, seek the assistance of a certified training instructor, TuffStuff authorized dealer or TuffStuff customer service personnel.

Immediately report any piece of equipment that is not functioning properly. DO NOT ATTEMPT to use or fix any piece of equipment yourself. Contact TuffStuff immediately.

ASTM F1749-96 TUFFSTUFF FITNESS INTERNATIONAL, CHINO, CA 91710

BNH3139

It is extremely important that the **BE ALERT! Sign** shown to the left be installed in plain view of the unit.

You should have received it along with this Owner's Manual. If you did not receive this Sign with your order, you can obtain one at no cost to you from TuffStuff Fitness by contacting our service department at:

1 (888) 884-8275
service@tuffstuff.net
service1@tuffstuff.net

Important Safety Instructions

DANGER

DO NOT pull or perform any exercises to the sides or to the back of the machine. Excessive pulling or force can cause the machine to tip over, and may result in serious injuries of death

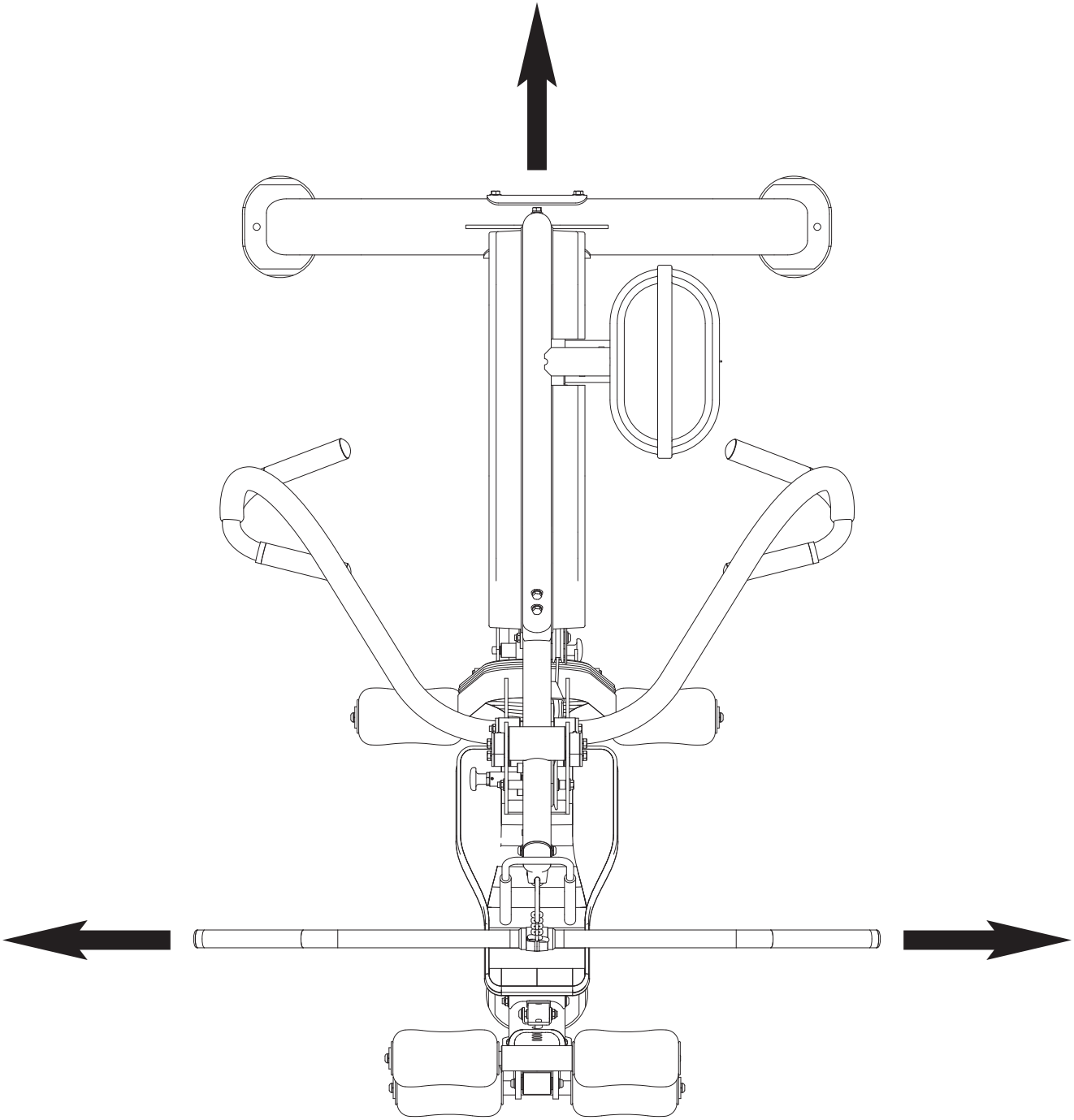

Important Safety Instructions

If you have not participated in a regular exercise program, smoke or have signs of high blood pressure, you must obtain a medical exam or consult with your personal physician before performing any AXT-225 exercises illustrated in this manual.

⚠ WARNING SERIOUS INJURY OR DEATH CAN OCCUR IF THESE SAFETY PRECAUTIONS ARE NOT OBSERVED:

1. **Read and understand Owner's Manual** and all Danger, Warning and Caution labels before using this equipment. If you still need help, call TuffStuff Fitness International.
2. Inspect the equipment before each use for wear and tear, loose fittings, worn or frayed cables and frame welds. DO NOT USE if it appears to be inoperable or damaged.
3. Stop exercising if you feel faint or dizzy. Call your doctor immediately if you are experiencing pain.
4. Use this equipment only for the intended use and for exercise(s) shown on pages 37-38.
5. Keep body, clothing and hair clear from all moving parts. Do not attempt to free any jammed parts by yourself.
6. Do not lean against or pull on the framework, weight stack or any component, whether the machine is in use or at rest.
7. Do not use accessories or accessory attachments that are not recommended by TuffStuff.
8. Children must not be allowed near the equipment. Teenager must be supervised.
9. Make sure selector pin is completely inserted and never pin the weights in an elevated position. Use only the selector pin provided by the manufacturer.
10. Do not remove any decals affixed to the machine. Replace if damaged.
11. Do not alter or modify the original manufacturer's 200 lbs. weight stack with any add-on incremental weights, weight plates or dumbbells except those with standard factory installed option.
12. Perform regular maintenance (see INSPECTION Label). Pay special attention to areas most susceptible to wear and tear, including but not limited to cables, pulleys and rubber grips.
13. Replace immediately all parts at first sign of wear or damage. Use only genuine TuffStuff replacement parts. Failure to do so will void warranty and could result in serious injury or death to you.

Training Safety

1. Always warm-up before and cool-down after weight training. Warm-up for 10-15 minutes with stretching and cardiovascular exercises. Cool-down should include light stretching exercises for 5-15 minutes.
2. Never hold your breath – will limit the flow of oxygen to your brain and may cause dizziness. The most often used breathing pattern is inhaling during least resistance and exhaling during maximum resistance.
3. Always choose a light resistance when using the machine the first time.
4. Trained at a controlled rate of speed

⚠ DANGER

DANGER: indicates an imminently hazardous situation which, if not avoided, will result in death or serious injury.

⚠ WARNING

WARNING: indicates a potentially hazardous situation which, if not avoided, will result in death or serious injury.

⚠ CAUTION

CAUTION: indicates a hazardous situation which, if not avoided, could result in minor or moderate injury.

Registration, Service & Assembly

Thank you for purchasing the AXT-225 Deluxe Home Gym. This machine is part of the TuffStuff line of quality strength training equipment. To maximize your use of the equipment, please study the Owner's Manual thoroughly.

Registration

To avoid unnecessary delays on warranty parts and to insure that a permanent record of your purchase is on file with our company, be sure to register online at http://www.tuffstuffitness.com or mail to address shown below within 10 days of purchase.

Obtaining Service

Please use this Owner's Manual as your guide to all parts included in your shipment. When ordering parts, you must specify the part number and description from this owner's manual. **Use only genuine TuffStuff replacement parts when servicing the equipment.** Failure to do so will void warranty and could result in serious injury or death.

For information about product operation or service:

Phone:	909-629-1600 Toll Free 888-884-8275
Fax:	909-629-4967
E-mail:	service@tuffstuff.net or service1@tuffstuff.net
Hours:	M–F 8:00 – 4:30 PST
Or write to:	TuffStuff Fitness International Inc. Customer Service 13971 Norton Avenue, Chino, CA 91710

Retain this Owner's Manual for future reference when ordering service or parts. To assist you better, please be prepared to provide the following information:

1. Model Number **2. Place of Purchase**
3. Serial Number **4. Part # and Description**

Required Tools

The basic tools that you will need to assemble the AXT-225 but are not limited to:

- 9/16", 3/4", 1/2" combination wrenches
- Adjustable wrench
- Ratchet wrench with 9/16", 3/4", 1/2" sockets
- External retaining ring pliers
- Rubber mallet, measuring tape & utility knife
- Super Lube® spray lubricant and grease
- Windex or household glass cleaner

Assembly Requirements

Follow these installation requirements when assembling the AXT-225. Use the overhead view on the Content Page to layout your floor plan before assembling.

Set up the AXT-225 on a clean, solid, flat surface. A smooth, flat surface under the machine helps keep it level.

Allow ample space around the machine for safe unrestricted use and easier access.

Insert all bolts in the same direction. For aesthetic appearance, insert all bolts in the same direction unless specified (in text or illustration) to do otherwise.

Leave room for adjustments. Do not fully tighten fasteners until instructed in the assembly steps to do so (to prevent any difficulty with alignment of parts during the assembly process). When not instructed, tighten fasteners such as bolts, nuts and screws so the unit is stable, but leave room for adjustments.

Assembly Tips

Read all "Notes" on each page before beginning each step.

While you may be able to assemble the AXT-225 using the illustrations only, IMPORTANT safety notes and other tips are included in the text.

Some pieces may have extra holes that you will not use. Use only those holes indicated in the instructions and illustration.

NOTE: With so many assembled parts, proper alignment and adjustment is critical. While tightening the nuts and bolts, be sure to leave room for final adjustments.

CAUTION: Obtain assistance from TFI if you have difficulty assembling the AXT-225. Please do not attempt to complete the assembly as this could result in equipment failure and serious injuries to the users.

Symbols & Description

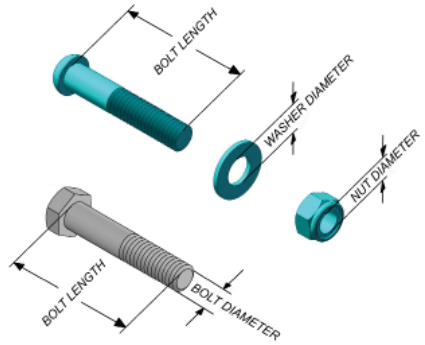

70%

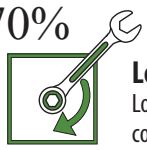

Loosely Fasten
Loosely tighten all hardware in this step. DO NOT fully tighten. Some component(s) may need pre-assembly and or alignment during the assembly process.

100%

Fully Fasten
Wrench tighten all hardware in this step.

Inspection/Maintenance

Perform regular maintenance (see Inspection Label). Pay special attention to areas most susceptible to wear and tear, including but not limited to cables, pulleys and rubber grip. TFI recommends you maintain a service contract with a TFI Authorized Dealer or a Professional Service Company approved by TFI. Keep a service log of all maintenance and repair activities. Extra copies can be downloaded from our website www.tuffstuffitness.com

INSPECTIONS

Home Use Only Recommended Inspection	DAILY	WEEKLY	MONTHLY	6-MONTH
INSPECT: Links, pull-pins, snap locks, swivels, connectors, selector pin, and welded-joints.	X			
CLEAN: Upholstery with lanolin-base cleaner. Do not use Windex.	X			
INSPECT: Cables and tension (adjust if needed).	X			
INSPECT: All labels		X		
INSPECT: All nuts and bolts (tighten if needed).		X		
INSPECT: Accessory bars, handles, rubber grips.		X		
INSPECT: All anti-skid surfaces.		X		
CLEAN & LUBRICATE: Clean guide rods with Super Lube® spray lubricant and lubricate with Super Lube® (PTFE) grease.			X	
LUBRICATE: Seat sleeves, pull-pin sliding mechanism, bushings and linear bearings.			X	
CLEAN & WAX: All powder-coat finishes.				X

Use only genuine TuffStuff replacement parts. Failure to do so will void warranty and could result in serious injury or death.

TuffStuff Fitness International
Chino, CA 91710, USA
www.tuffstuffitness.com

BNH3155

INSPECTION / MAINTENANCE RECORDS

DATE	REPLACEMENT	REPAIRS	INSPECTED BY

WARRANTY REPAIRS

DATE	REPLACEMENT	REPAIRS	INSPECTED BY

Cable Inspection

WARNING:

THE FOLLOWING CONDITIONS MAY INDICATE A WORN CABLE. REPLACE IMMEDIATELY.

"NECKING", STRETCHED CABLE COVERING

A CRACK IN THE CABLE COVER

A TEAR IN THE CABLE COVER

A BREAK ON THE CABLE

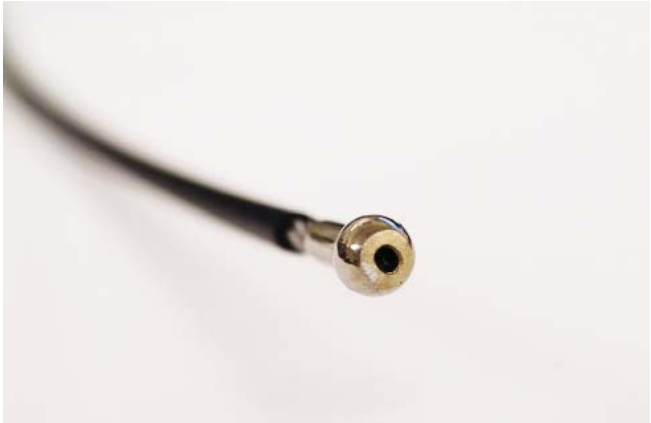

CABLE END SLIPPING OUT

IMPORTANT NOTE:

DAMAGED OR WORN CABLE (AS SHOWN ABOVE) MAY DAMAGE THE PULLEY(S). YOU MUST INSPECT THE PULLEYS AT THIS TIME FOR WEAR AND TEAR. REPLACE IF NEEDED.

Step 1

Step 1 Assembly List		
Item #	**Description**	**Qty.**
***7**	**BASE FRAME**	**1**
***23**	**REAR FRAME**	**1**
71	HEX HEAD CAP SCREW Z/P 3/8-16 X 5 1/8	2
83	NYLON INSERT THIN PATTERN LOCK NUT Z/P 3/8-16	2
126	OVAL WASHER Z/P 3/8”	4

NOTE:

1. It is strongly recommended that 2 people participate in the assembly of this unit.

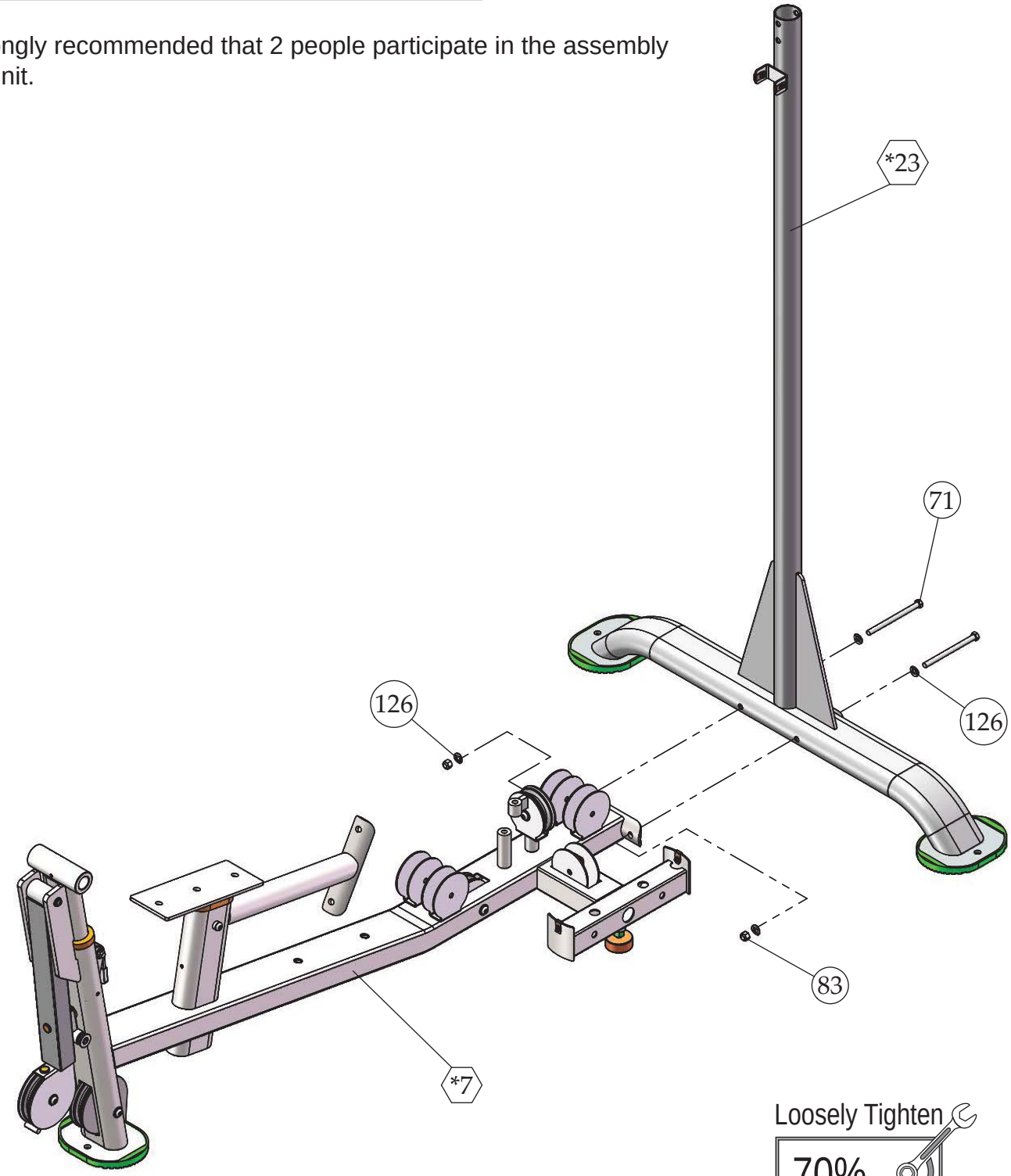

Loosely Tighten

70%

Loosely Tighten

Loosely tighten all hardware in this step.

Step 2

Step 2 Assembly List		
Item #	**Description**	**Qty.**
***12**	**FRONT UPRIGHT**	**1**
***24**	**TOP FRAME**	**1**
61	FLAT WASHER SAE Z/P 1/2”	2
66	HEX HEAD CAP SCREW Z/P 1/2-13 X 1 1/4	2
68	HEX HEAD CAP SCREW Z/P 3/8-16 X 1	7
71	HEX HEAD CAP SCREW Z/P 3/8-16 X 5 1/8	2
83	NYLON INSERT THIN PATTERN LOCK NUT Z/P 3/8-16	2
113	SPLIT LOCK WASHER Z/P 1/2”	2
115	SPLIT LOCK WASHER Z/P 3/8”	7
126	OVAL WASHER Z/P 3/8”	11

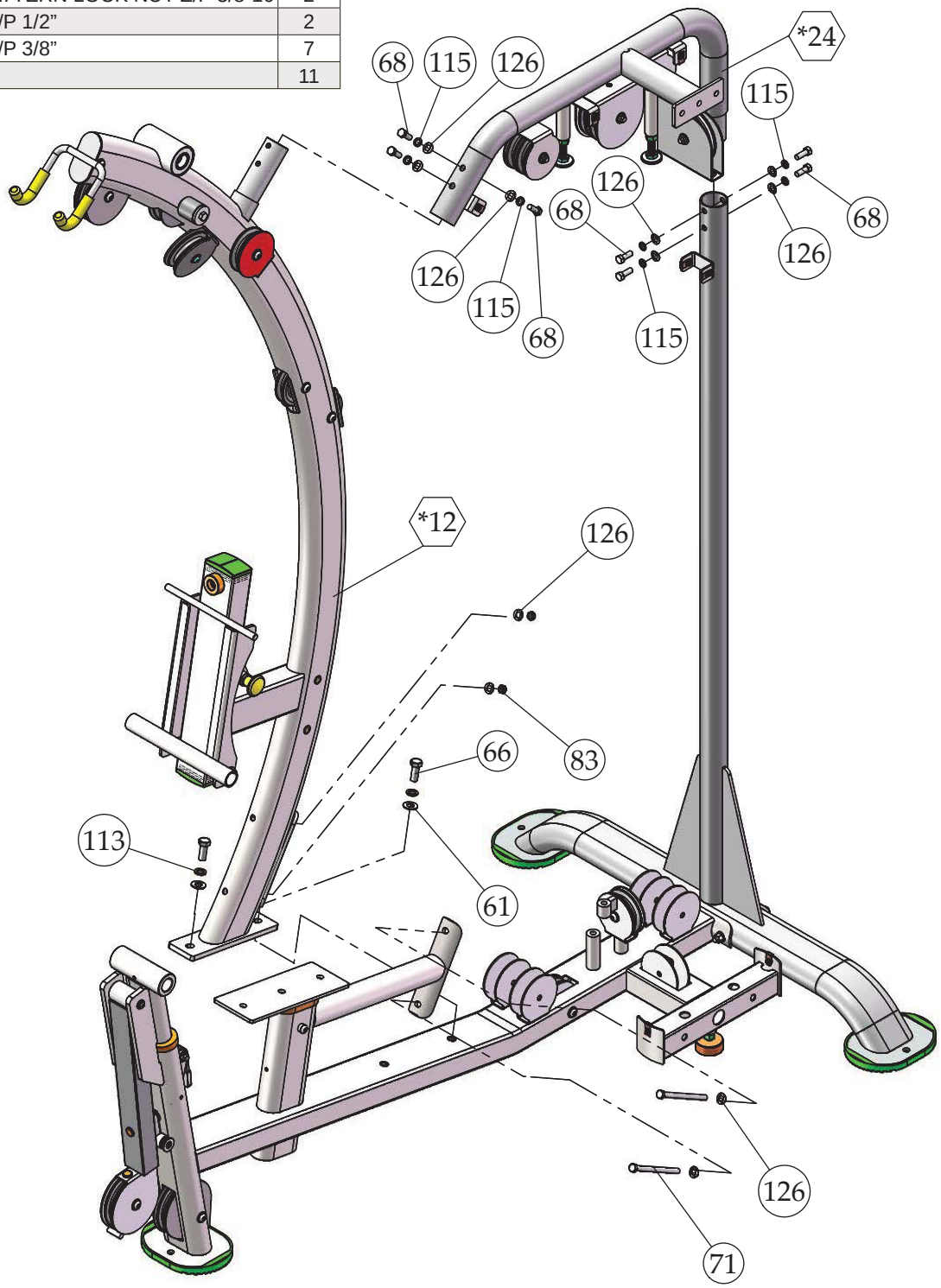

Fully Tighten

100%

Fully Tighten
Wrench tighten all hardware in this and previous loosely tighten steps.

Step 3

Step 3 Assembly List		
Item #	**Description**	**Qty.**
19	**PIVOT AXLE SS 1 RD CR X 6 1/32**	**1**
***21**	**PRESS BAR HOUSING**	**1**
41	SUPPORT WASHER Z/P 3/8 ID X 1 1/2 OD X 3/16	2
68	HEX HEAD CAP SCREW Z/P 3/8-16 X 1	2
109	SOCKET SET SCREW ALLOY 1/4-20 X 1/4	2
115	SPLIT LOCK WASHER Z/P 3/8”	2

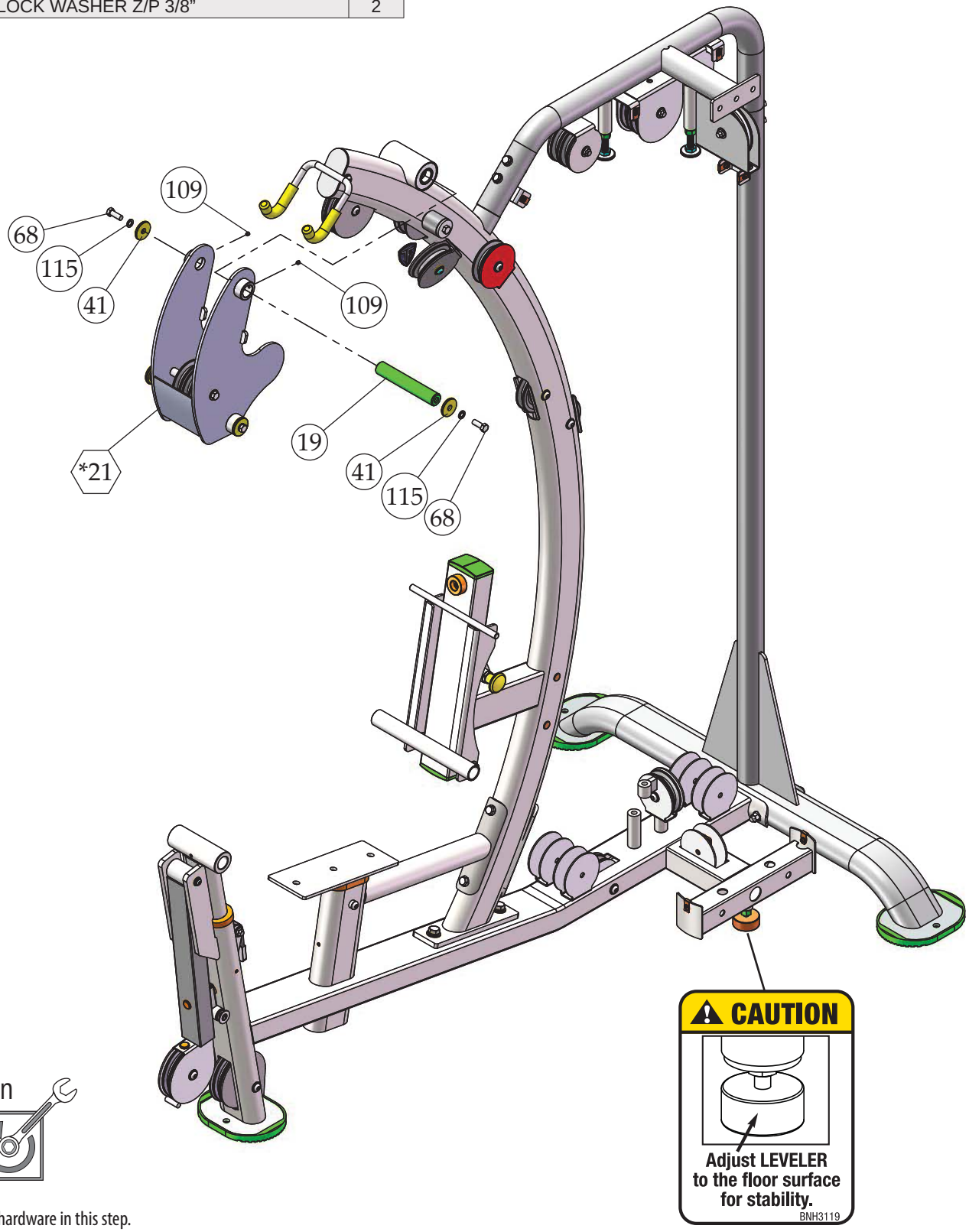

Fully Tighten

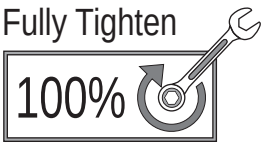

Fully Tighten
Wrench tighten all hardware in this step.

Step 4

Step 4 Assembly List		
Item #	**Description**	**Qty.**
19	**PIVOT AXLE SS 1 RD CR X 6 1/32**	**1**
***20**	**PRESS BAR**	**1**
41	SUPPORT WASHER Z/P 3/8 ID X 1 1/2 OD X 3/16	2
68	HEX HEAD CAP SCREW Z/P 3/8-16 X 1	2
109	SOCKET SET SCREW ALLOY 1/4-20 X 1/4	2
115	SPLIT LOCK WASHER Z/P 3/8”	2

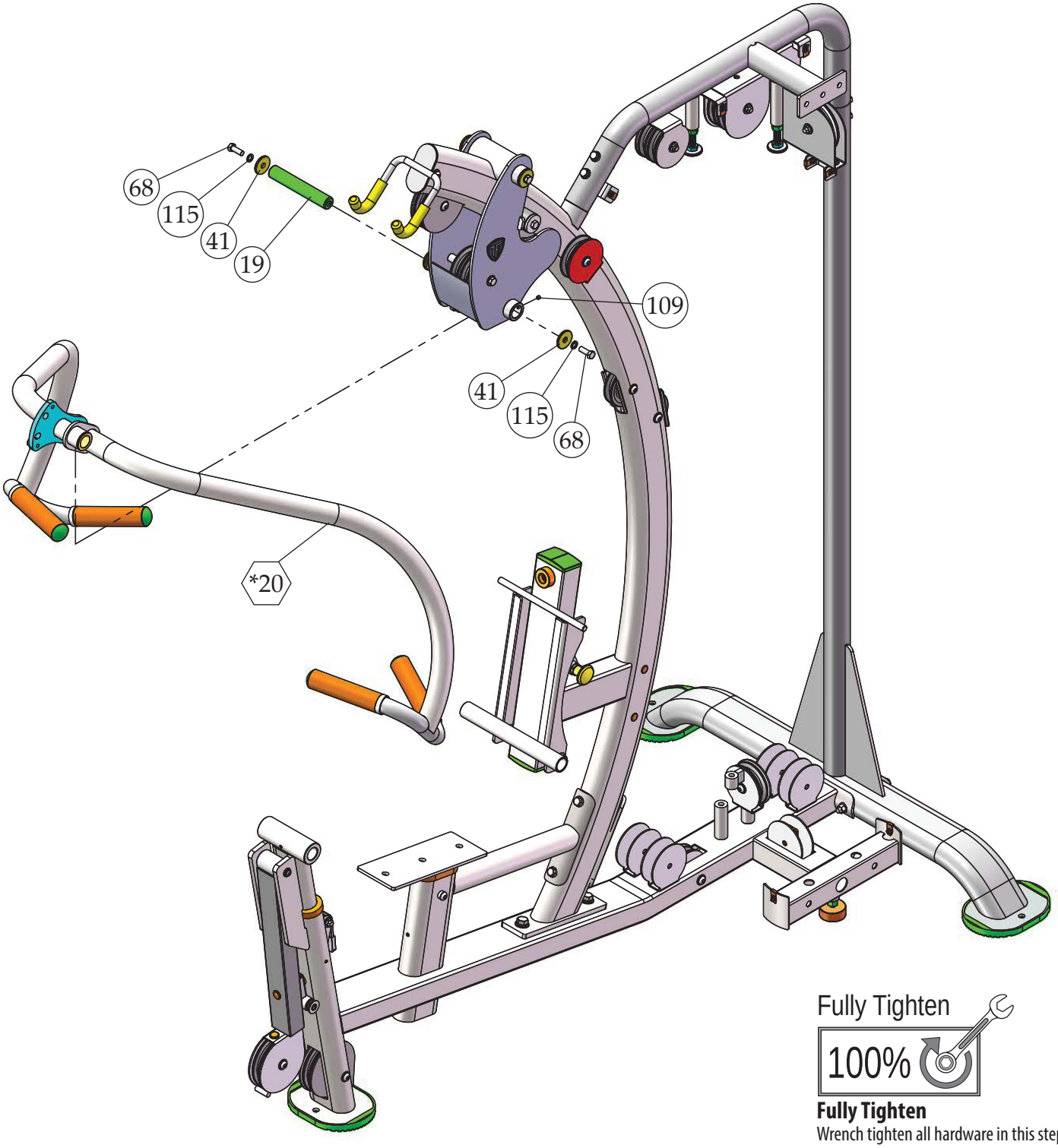

Fully Tighten

100%

Fully Tighten
Wrench tighten all hardware in this step.

Step 5

Step 5 Assembly List		
Item #	**Description**	**Qty.**
13	**GUIDE ROD 3/4" X 73 13/16**	**2**
27	**SELECTOR PIN W/COIL 3/8 X 4 GOLD KNOB**	**1**
***32**	**TOP GUIDE ROD HOUSING**	**1**
35	10 LB STEEL WEIGHT PLATE BLACK	19
36	10 LB TOP PLATE W/ADJ. SELECTOR BAR	1
41	SUPPORT WASHER Z/P 3/8 ID X 1 1/2 OD X 3/16	2
62	FLAT WASHER SAE Z/P 3/8"	6
68	HEX HEAD CAP SCREW Z/P 3/8-16 X 1	4
69	HEX HEAD CAP SCREW Z/P 3/8-16 X 3	2
83	NYLON INSERT THIN PATTERN LOCK NUT Z/P 3/8-16	2
97	RUBBER DONUT 3/4 X 2 1/2	4
115	SPLIT LOCK WASHER Z/P 3/8"	4

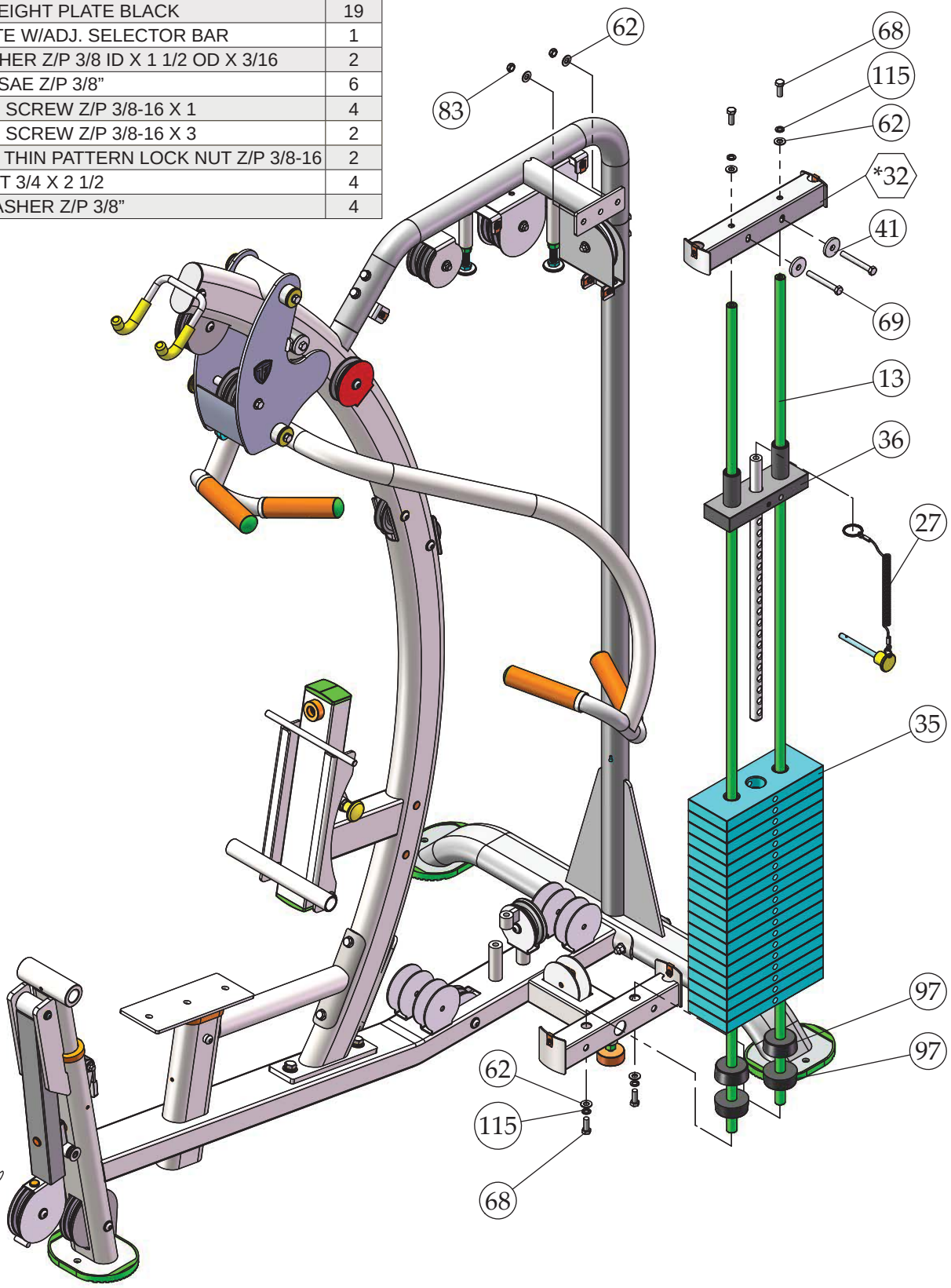

Fully Tighten

100%

Fully Tighten

Wrench tighten all hardware in this step.

Step 6

Step 6-7 Assembly List		
Item #	**Description**	**Qty.**
***3**	**ADJUSTABLE DOUBLE PULLEY BRACKET**	**1**
15	**LAT CABLE**	**1**
36	10 LB TOP PLATE W/ADJ. SELECTOR BAR	1
37	7/8 RD X 1 5/8 LINK 3/16 CABLE	1
56	CABLE STOPPER SHELL 1 1/2 X 1 3/4	1
58	COIL CHAIN Z/P 3/16 X 8	1
60	FINISHED HEX NUT Z/P 1/2-13	1
73	LAT BAR 1 1/4 ALUMINUM	1
86	OVAL HEAD PHILLIPS MACHINE SCREW Z/P #10-32 X 1 1/8	1
104	SNAP LINK Z/P 8MM X 80MM	2
112	SPLIT HEX TAP BOLT Z/P 1/2 -13 X 3 1/2	1
113	SPLIT LOCK WASHER Z/P 1/2”	1
128	DECAL NUMBERS 10-200 LBS/KGS 7/8 X 3 YELLOW	1

NOTE:

1. TOP PLATE LABEL GOES ON HOLE OFF CENTER AS SHOWN. LABEL WILL COVER HOLE ON CENTER.

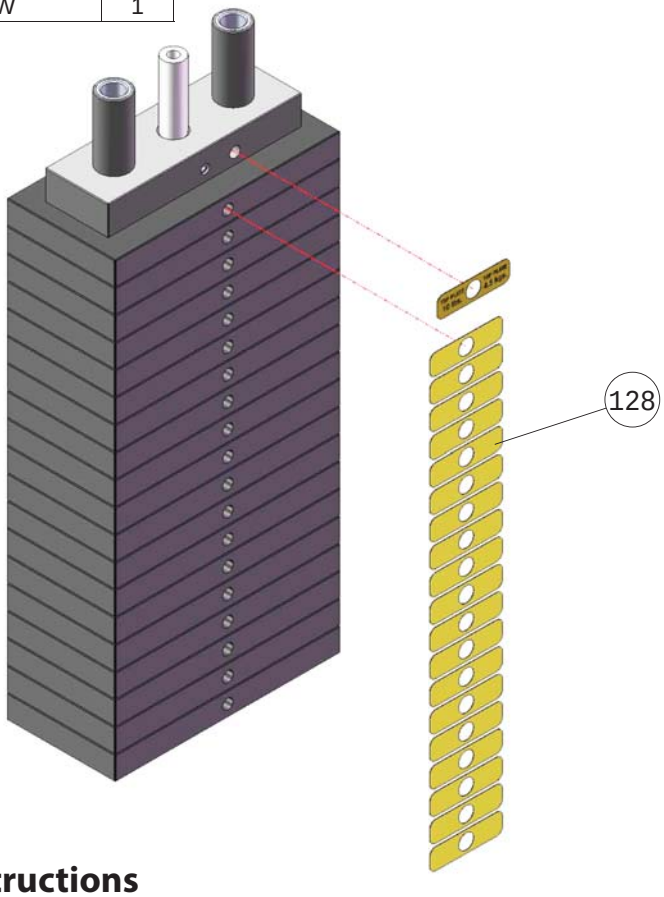

Weight stack label and lubrication instructions

1. Wipe front surface of weight stack with rubbing alcohol and wipe dry.
2. Peel off back sheet (adhesive side) from label (#128) and make sure that the label remains attached to the application tape.
3. Line up left edge of label sheet with outside edge of weight holes.
4. Line up the first label to hole on top plate.
5. Make sure label is straight and slowly press into place.
6. Gently remove application tape and rub each label firmly against the weight stack.
7. Allow labels to stand for 2 days to allow adhesive to cure fully.
8. Open the lube package provided and apply a thin film of lubricant around the first 3 inches of the guide rods above the top plate.
9. After the cables are installed, do a set of reps to spread the lubricant thoroughly.

Step 7 Lat Cable Routing

NOTE:

1. SOME PARTS CUT OUT/NOT SHOWN FOR CLARITY.
2. FOLLOW THE TRIANGLE BALLOONS TO PROPERLY ROUTE THE CABLE.
3. USE GUIDE WIRE TO RUN CABLE BETWEEN PULLEYS.

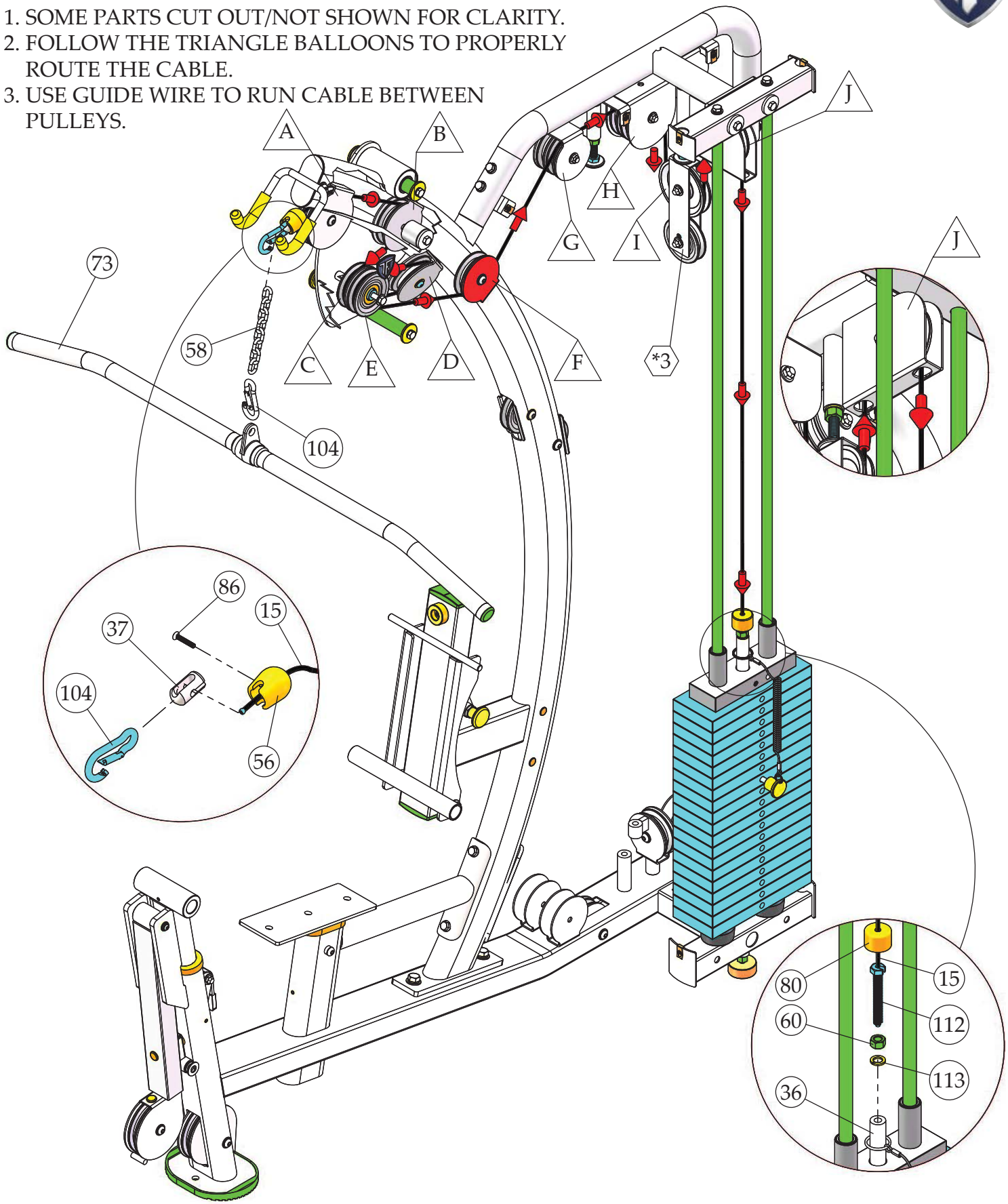

Step 8 Abdominal Cable Routing

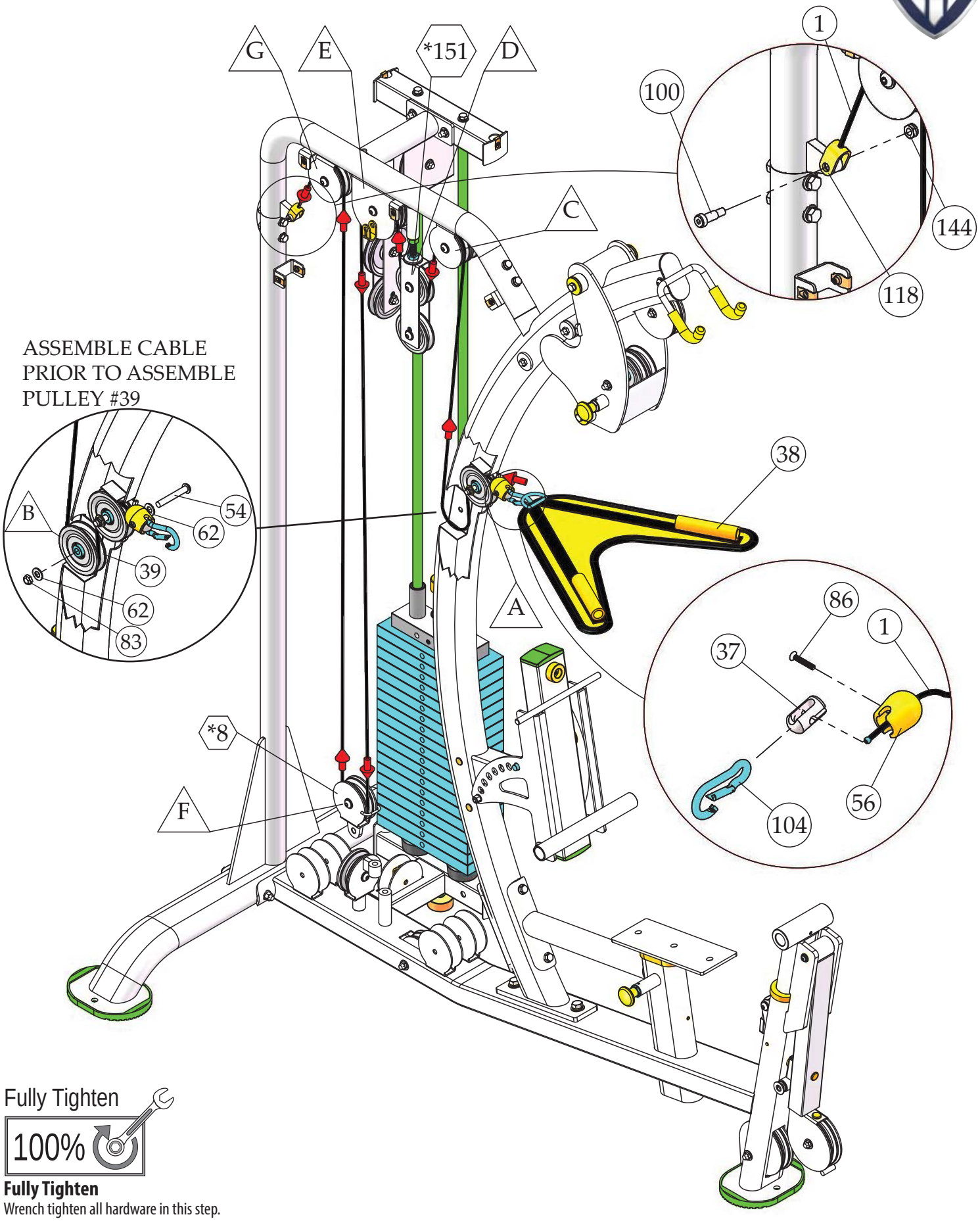

Fully Tighten

100%

Fully Tighten

Wrench tighten all hardware in this step.

Step 8 Assembly List

Item #	Description	Qty.
1	**ABDOMINAL CABLE**	**1**
***8**	**FLOATING PULLEY BRACKET**	**1**
37	7/8 RD. X 1 5/8 LINK 3/16 CABLE	1
38	ABDOMINAL CRUNCH HARNESS	1
39	BLK NYLON PULLEY 12.5MM X 26.3MM X 90MM	1
54	BUTTON HEAD SOCKET CAP SCREW Z/P 3/8-16 X 2 1/2	1
56	CABLE STOPPER SHELL 1 1/2 X 1 3/4	1
86	OVAL HEAD PHILLIPS MACHINE SCREW Z/P #10-32 X 1 1/8	1
100	SHOULDER BOLT Z/P 3/8 X 3/4	1
104	SNAP LINK Z/P 8MM X 80MM	1
118	STRAP BRACKET 20 #SF20 STAINLESS STEEL	1
144	NYLON INSERT LOCK NUT Z/P 5/16-18	1
*151	ADJUSTABLE DOUBLE PULLEY BRACKET	1

NOTE:

1. SOME PARTS CUT OUT/NOT SHOWN FOR CLARITY.
2. FOLLOW THE TRIANGLE BALLOONS TO PROPERLY ROUTE THE CABLE.

Fully Tighten

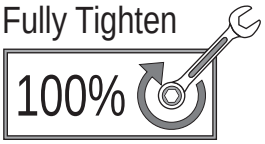

Fully Tighten

Wrench tighten all hardware in this step.

Step 9 Anti-Twist Cable Routing

Step 9 Assembly List		
Item #	**Description**	**Qty.**
***8**	**FLOATING PULLEY BRACKET**	**1**
60	FINISHED HEX NUT Z/P 1/2-13	1
113	SPLIT LOCK WASHER Z/P 1/2”	1
145	ANTI-TWIST CABLE	1

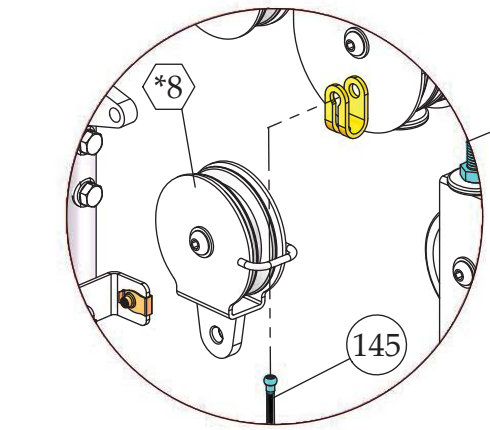

STEP 1

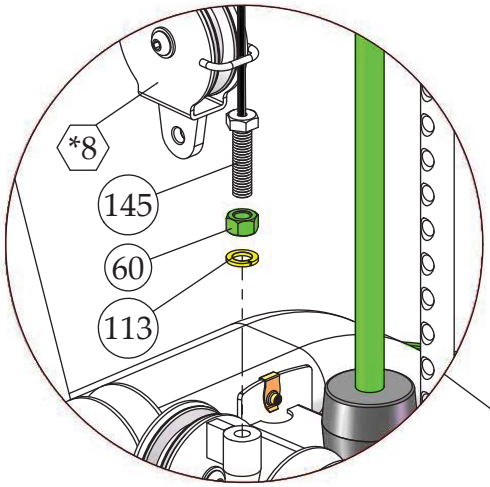

STEP 2

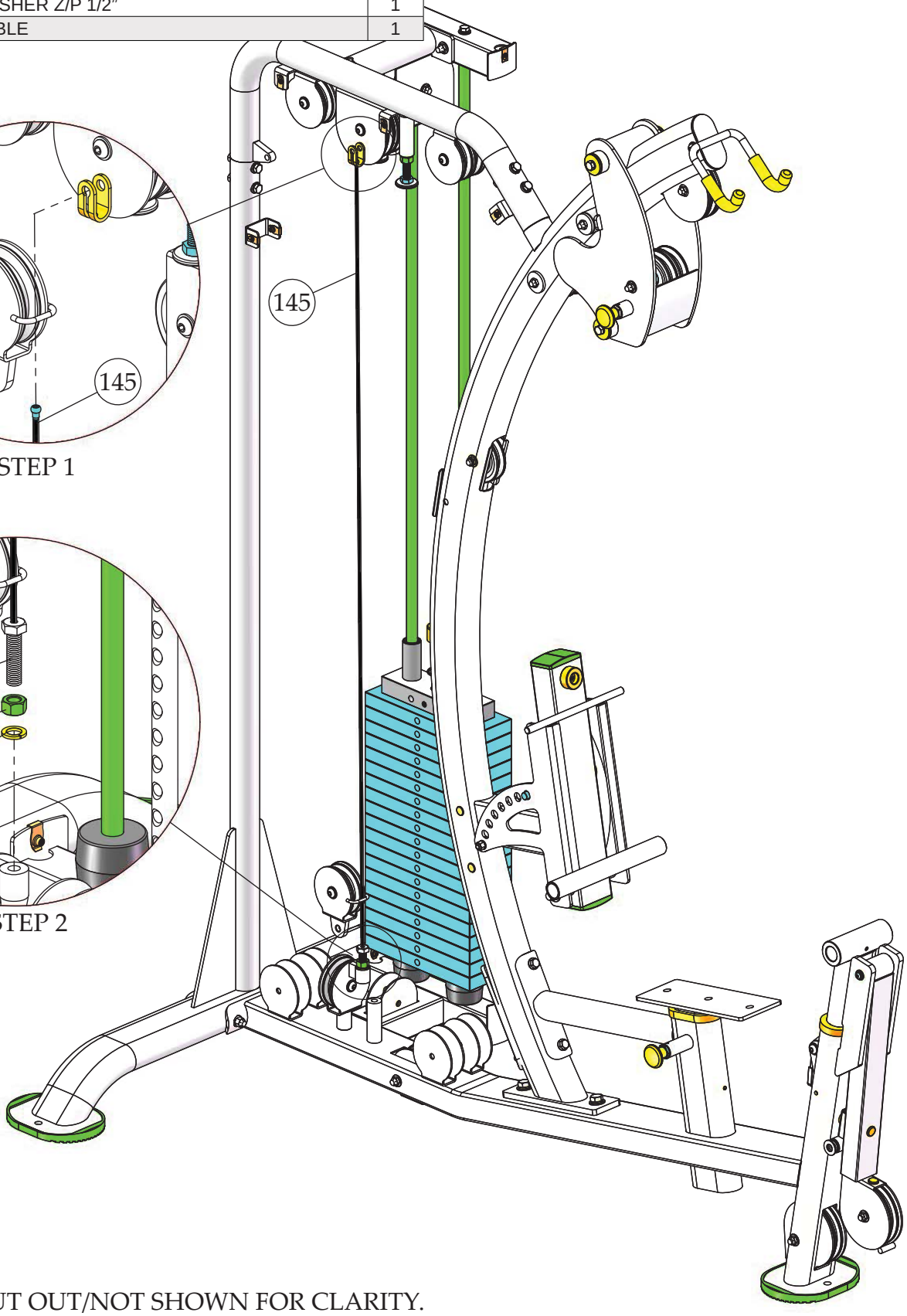

NOTE:

1. SOME PARTS CUT OUT/NOT SHOWN FOR CLARITY.

Step 10 Leg Extension/Curl Cable Routing

NOTE:

1. SOME PARTS CUT OUT/NOT SHOWN FOR CLARITY.

Step 10 Assembly List

Item #	Description	Qty.
16	**LEG EXT/CURL CABLE**	**1**
37	7/8 RD X 1 5/8 LINK 3/16 CABLE	1
56	CABLE STOPPER SHELL 1 1/2 X 1 3/4	1
60	FINISHED HEX NUT Z/P 1/2-13	1
76	LOW ROW BAR 1 1/4 ALUMINUM	1
86	OVAL HEAD PHILLIPS MACHINE SCREW Z/P #10-32 X 1 1/8	1
104	SNAP LINK Z/P 8MM X 80MM	2
105	NYLON ANKLE STRAP	1
112	SPLIT HEX TAP BOLT Z/P 1/2 -13 X 3 1/2	1
113	SPLIT LOCK WASHER Z/P 1/2”	1
117	COIL CHAIN Z/P 3/16 X 12	1
*151	ADJUSTABLE DOUBLE PULLEY BRACKET	1

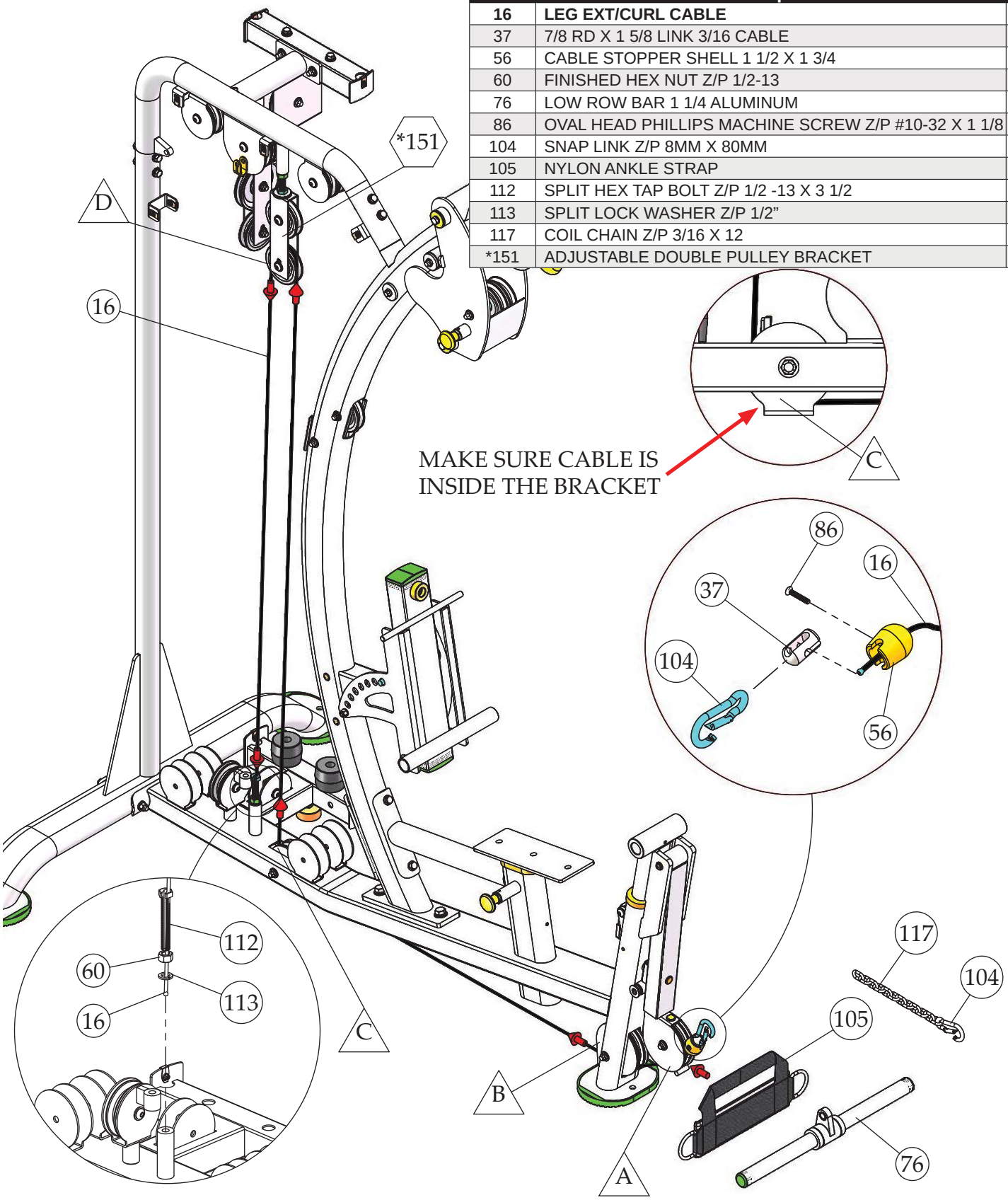

Important Note

NOTE:

(FOR CUSTOMERS WHO WILL BE ATTACHING AN SXT-LP UNIT ONLY)

1. DO NOT ASSEMBLE THE TENSION CABLE #31 ON THE FOLLOWING STEP AS THE LEG PRESS CABLE WILL REPLACE IT.
2. SKIP TO THE SXT-LP OWNER'S MANUAL TO CONTINUE WITH ASSEMBLY.
3. AFTER COMPLETING SXT-LP ASSEMBLY, COME BACK TO THIS MANUAL AND CONTINUE ON STEP 12.

Step 11 Tensin Cable

NOTE:

1. SOME PARTS CUT OUT/NOT SHOWN FOR CLARITY.
2. FOLLOW THE TRIANGLE BALLOONS TO PROPERLY ROUTE THE CABLE.

Step 11 Assembly List

Item #	Description	Qty.
***3**	**ADJUSTABLE DOUBLE PULLEY BRACKET**	**1**
***8**	**FLOATING PULLEY BRACKET**	**1**
31	**TENSION CABLE**	**1**
53	BUTTON HEAD SOCKET CAP SCREW Z/P 3/8-16 X 1 3/4	1
62	FLAT WASHER SAE Z/P 3/8”	2
83	NYLON INSERT THIN PATTERN LOCK NUT Z/P 3/8-16	1
100	SHOULDER BOLT Z/P 3/8 X 3/4	1
118	STRAP BRACKET 20 #SF20 STAINLESS STEEL	1
144	NYLON INSERT LOCK NUT Z/P 5/16-18	1

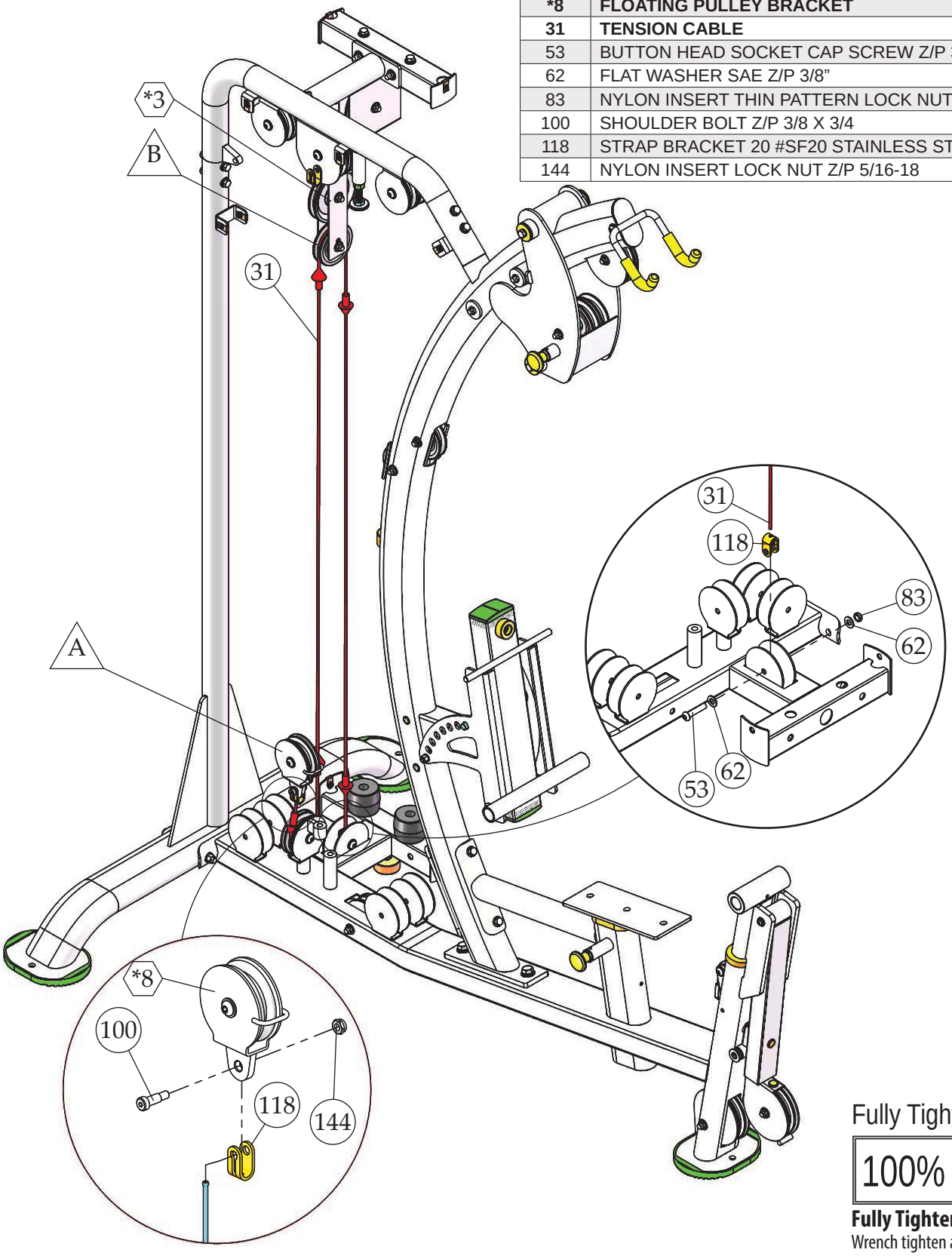

Fully Tighten

100%

Fully Tighten

Wrench tighten all hardware in this step.

Step 12

Step 12 Assembly List		
Item #	**Description**	**Qty.**
29	**SPACER 9/16 RD X 4 (2X 1/4-20 TAP HOLES)**	**2**
47	BUTTON HEAD SOCKET CAP SCREW Z/P 1/4-20 X 3/4	12
64	FLAT WASHER USS Z/P 1/4”	12
101	SIDE INNER COVER LG	1
102	SIDE INNER COVER S	1
103	SIDE OUTER COVER	1

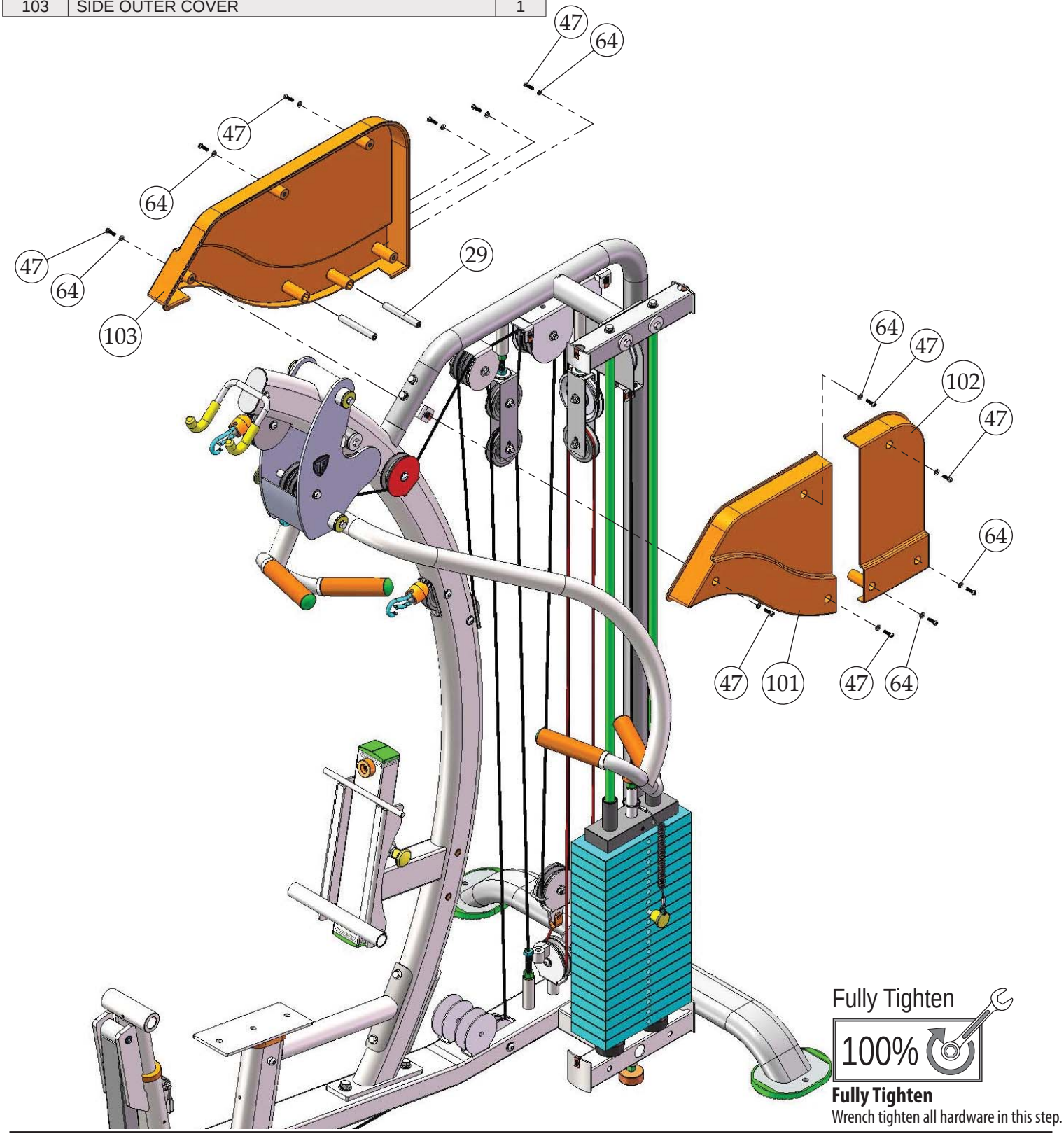

Fully Tighten
Wrench tighten all hardware in this step.

Step 13

Step 13 Assembly List		
Item #	**Description**	**Qty.**
***33**	**WEIGHT SHIELD REAR**	**1**
47	BUTTON HEAD SOCKET CAP SCREW Z/P 1/4-20 X 3/4	4
64	FLAT WASHER USS Z/P 1/4”	4
121	WEIGHT STACK LID	1
***150**	**WEIGHT SHIELD FRONT**	**1**

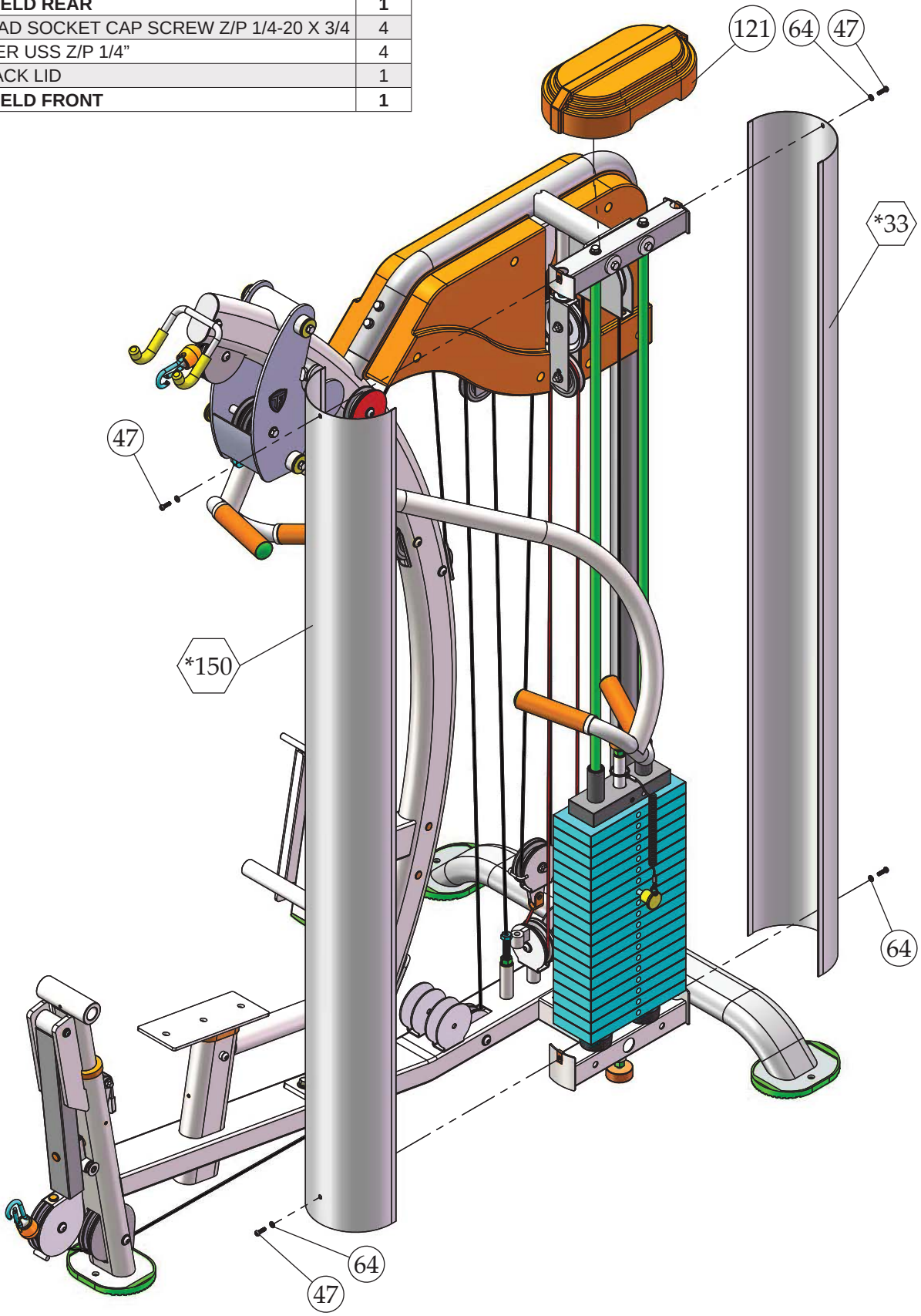

Step 14

Step 14 Assembly List		
Item #	**Description**	**Qty.**
4	**FOOT ROLL TUBE 19 7/8**	**1**
9	**FOAM FOOT ROLL 1 X 4 X 7 W/VINYL**	**6**
10	**FOOT ROLL TUBE 1 RD X 25 9/32**	**1**
30	**SWIVEL FOOT ROLL HOLDER**	**1**
41	SUPPORT WASHER Z/P 3/8 ID X 1 1/2 OD X 3/16	6
46	BUTTON HEAD SOCKET CAP SCREW Z/P 1/2-13 X 3 3/4	1
52	BUTTON HEAD SOCKET CAP SCREW Z/P 3/8-16 X 1	6
61	FLAT WASHER SAE Z/P 1/2”	2
79	NYLON FOOT ROLL BUSHING	12
82	NYLON INSERT THIN PATTERN LOCK NUT Z/P 1/2-13	1
109	SOCKET SET SCREW Z/P 1/4-20 X 1/4	2
115	SPLIT LOCK WASHER Z/P 3/8”	6

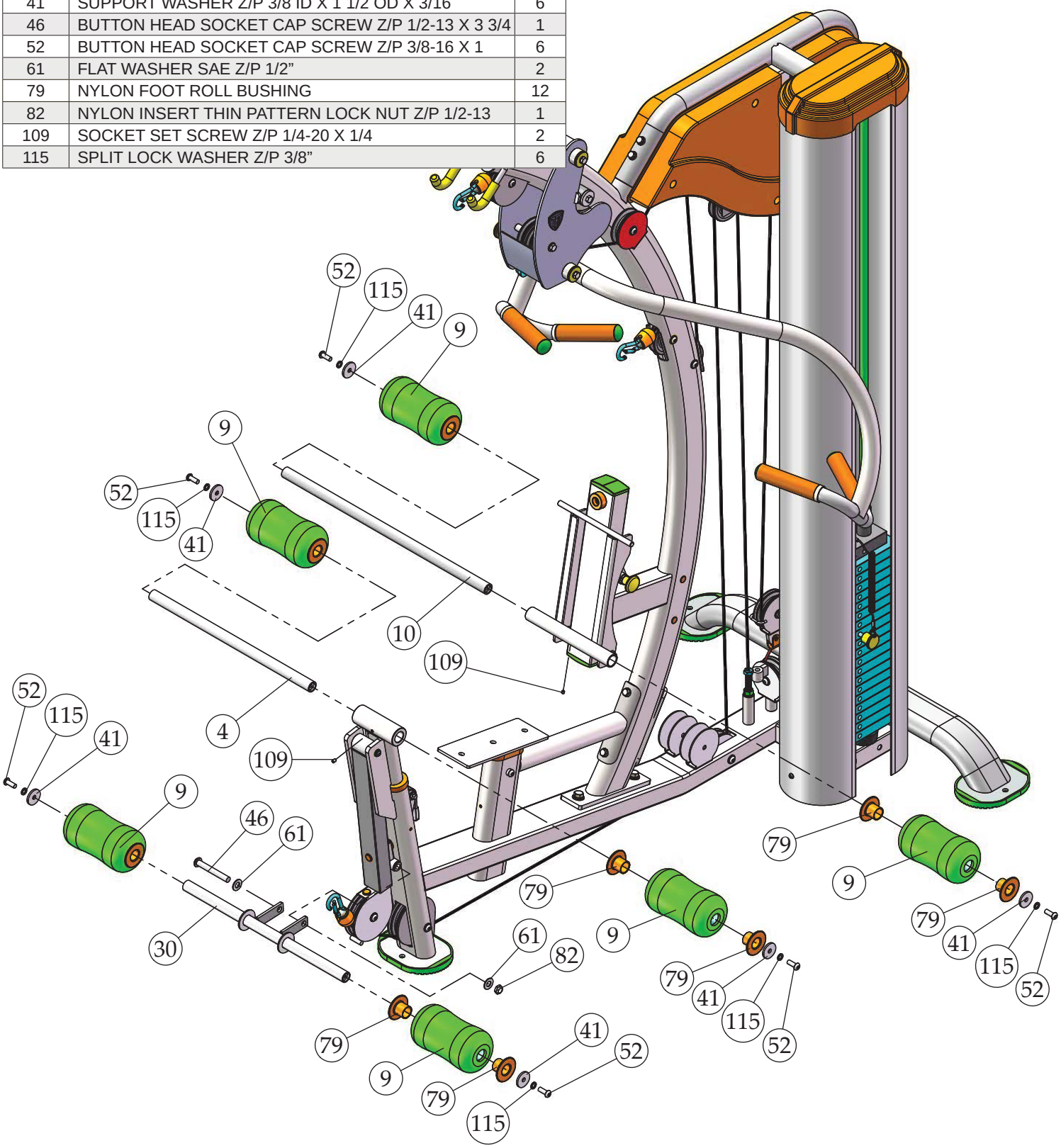

Step 15

Step 15 Assembly List		
Item #	**Description**	**Qty.**
6	**BACK PAD**	**1**
26	**SEAT PAD**	**1**
48	BUTTON HEAD SOCKET CAP SCREW Z/P 3/8-16 X 1 1/4	6
62	FLAT WASHER SAE Z/P 3/8”	6
77	METAL HINGE	2

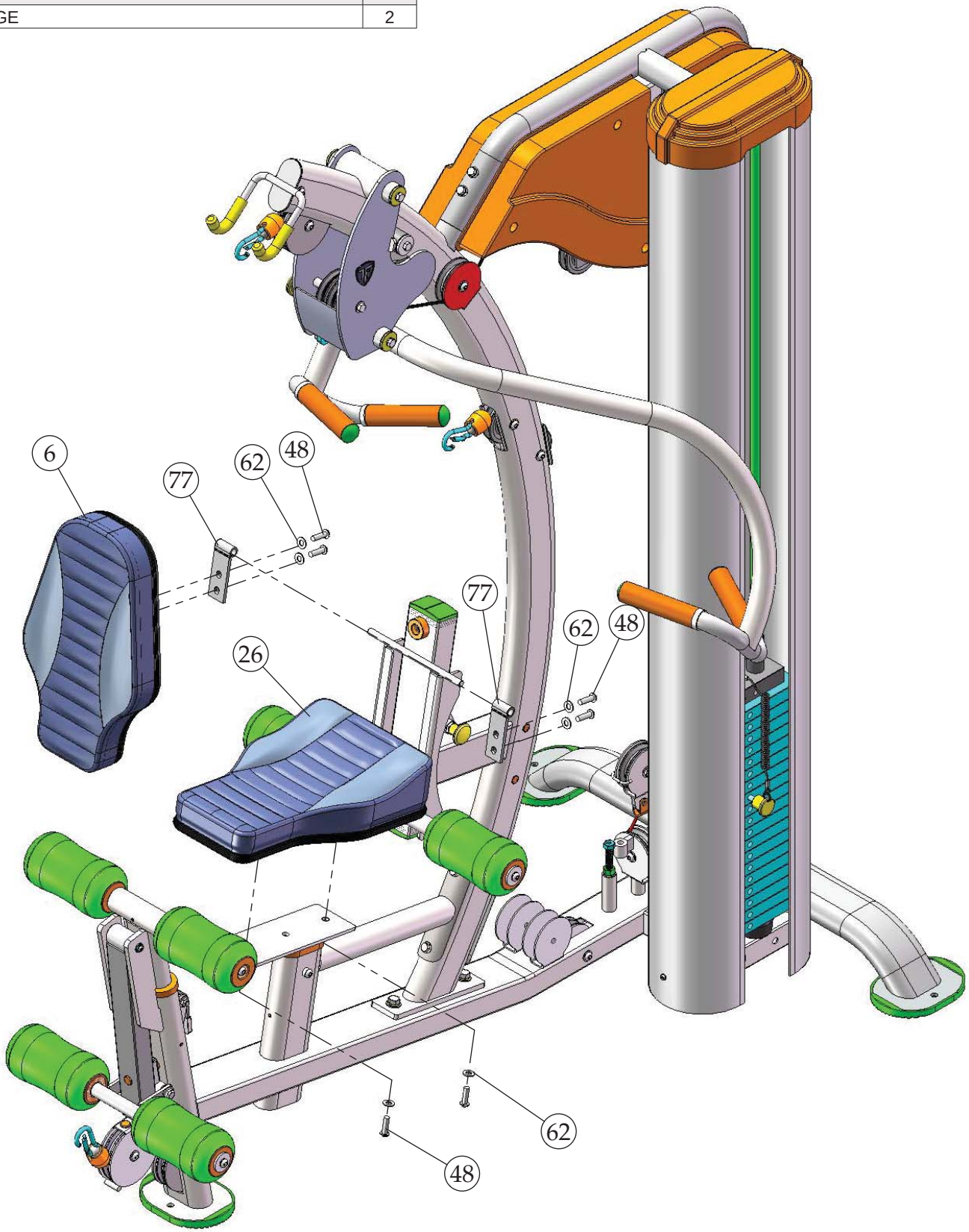

Parts List

COLOR CHART
GRAY= SUB-ASSEMBLY PARTS
BLACK= HARDWARE

AXT-225

Parts List

Item No.	Description	Rev.	Part No.	Qty.	Item No.	Description	Rev.	Part No.	Qty.
1	ABDOMINAL CABLE 3/16" X 191"	0	UP7758	1	64	FLAT WASHER USS Z/P 1/4"		BNH2105	16
2	ADJUSTABLE BACK PAD BRACKET	0	UP7869	1	65	FLAT WASHER USS Z/P 5/16"		BNH2071	2
3	ADJUSTABLE DOUBLE PULLEY BRACKET	0	UP7719	1	66	HEX HEAD CAP SCREW Z/P 1/2-13 X 1 1/4		BNH2167	2
4	FOOT ROLL TUBE 19 7/8	0	UP4241	1	67	HEX HEAD CAP SCREW Z/P 1/2-13 X 6 3/8		BNH3320	1
5	ADJUSTABLE RELEASE HANDLE	0	UP7676	1	68	HEX HEAD CAP SCREW Z/P 3/8-16 X 1		BNH2037	15
6	BACK PAD	0	UP7981	1	69	HEX HEAD CAP SCREW Z/P 3/8-16 X 3		BNH2046	2
7	BASE FRAME	1	UP7739	1	70	BUTTON HEAD SOCKET CAP SCREW Z/P 3/8-16 X 4 1/2		BNH2437	2
8	FLOATING PULLEY BRACKET	1	UP3733	1	71	HEX HEAD CAP SCREW Z/P 3/8-16 X 5 1/8		BNH3314	5
9	FOAM FOOT ROLL 1 X 4 X 7 W/VINYL	0	UP3785	6	72	HEX HEAD CAP SCREW Z/P 3/8-16 X 6 1/8		BNH3335	1
10	FOOT ROLL TUBE 1 RD X 25 9/32	0	UP7761	1	73	LAT BAR 1 1/4 ALUMINUM		BNH1770	1
11	ADJUSTABLE LEG HOLDER	0	UP7750	1	74	LEVER ADJUSTMENT M10		BNH3362	1
12	FRONT UPRIGHT	0	UP7740	1	75	LEVER ADJUSTMENT NUT M10		BNH3363	1
13	GUIDE ROD 3/4" X 73 13/16	0	UP7765	2	76	LOW ROW BAR 1 1/4 ALUMINUM		BNH1771	1
14	LAT BAR HOLDER	0	UP7727	1	77	METAL HINGE		BNH0046	2
15	LAT CABLE 3/16" X 148 1/2"	0	UP7757	1	78	NYLON BUMPER .67 DIA X .41		BNH3327	3
16	LEG EXT/CURL CABLE 3/16" X 168 1/2"	0	UP7764	1	79	NYLON FOOT ROLL BUSHING		BNH1807	12
17	LEG EXTENSION ARM	0	UP7982	1	80	BLACK NYLON BUMPER		BNH3308	1
18	PIVOT AXLE 1/2 X 3	0	UP3741	1	81	HEX NUT M8		BNH3252	2
19	PIVOT AXLE SS 1 RD CR X 6 1/32	0	UP7751	2	82	NYLON INSERT THIN PATTERN LOCK NUT Z/P 1/2-13		BNH2027	2
20	PRESS BAR	0	UP7743	1	83	NYLON INSERT THIN PATTERN LOCK NUT Z/P 3/8-16		BNH2026	29
21	PRESS BAR HOUSING	0	UP7748	1	84	NYLON SNAP-IN FINISHING PLUG 3/8"		BNH0720	4
22	PULLEY COVER 3 1/2	0	UP7663	1	85	NYLON STEM BUTTON .720" X .187"		BNH0533	2
23	REAR FRAME	0	UP7745	1	86	OVAL HEAD PHILLIPS MACHINE SCREW Z/P #10-32 X 1 1/8		BNH2793	3
24	TOP FRAME	1	UP7868	1	87	PLASTIC INSERT ELLIPTICAL GUIDE		BNH1760	2
25	SEAT ADJUSTMENT TUBE	0	UP7746	1	88	SUPER LUBE TEFLON LUBRICANT 82340		BNH0704	2
26	SEAT PAD	0	UP7749	1	89	LABEL WARNING KEEP BODY, HANDS, 1 1/2 X 2 1/4		BNH2908	2
27	SELECTOR PIN W/COIL 3/8 X 4 GOLD KNOB	0	UP3035	1	90	PLASTIC INSERT CAP 1 1/4" RD V30906		BNH3407	4
28	SHORT ADJUSTABLE STOPPER	0	UP0735	2	91	PLASTIC INSERT CAP 2 X 3 _ 11-14 GA		BNH0052	2
29	SPACER 9/16 RD X 4 (2X 1/4-20 TAP HOLES)	0	UP7728	2	92	PULL PIN 1/2 X 3 1/2 LIGHT SPRING (YELLOW KNOB)		BNH0603	2
30	SWIVEL FOOT ROLL HOLDER	0	UP7983	1	93	PULL PIN 1/2 X 5 5/8 LIGHT SPRING (YELLOW KNOB)		BNH0701	1
31	TENSION CABLE 3/16" X 122 7/16"	0	UP7763	1	94	PULL PIN STIFF SPRING 17/32 X 1 1/2 K-105SS		BNH0519	1
32	TOP GUIDE ROD HOUSING	0	UP7741	1	95	RELEASE LEVER PROTECTIVE COVER (YELLOW)		BNH1940	1
33	WEIGHT SHIELD	0	UP7762	2	96	RUBBER BUMPER W/WASHER 3/8 X 1 1/2		BNH0514	1
34	LABEL-WARRANTY HOME LIFETIME		BNH3156	1	97	RUBBER DONUT 3/4 X 2 1/2		BNH0068	4
35	10 LB STEEL WEIGHT PLATE BLACK 4 9/16 X 9 7/16 ASSY		BNH1650	19	98	LABEL-CAUTION ADJUST LEVELER TO FLOOR SURFACE		BNH3119	1
36	10 LB TOP PLATE W/ADJ SLTR BAR 19 BLK WTS ASSY		BNH1982	1	99	RUBBER GRIP 1.1875 ID X .125 X 5 7/8		BNH3367	4
37	7/8 RD X 1 5/8 LINK 3/16 CABLE		BNH4232	3	100	SHOULDER BOLT Z/P 3/8 X 3/4		BNH2392	2
38	ABDOMINAL CRUNCH HARNESS		BNH0235	1	101	SIDE INNER COVER LG		BNH3265	1
39	BLACK NYLON PULLEY 3/8 X 1 X 3 1/2		BNH0553	16	102	SIDE INNER COVER S		BNH3266	1
40	NYLON PULLEY 3/8 X 1 X 4 1/2 BLACK		BNH0506	7	103	SIDE OUTER COVER		BNH3264	1
41	SUPPORT WASHER Z/P 3/8 ID X 1 1/2 OD X 3/16		BNH3343	15	104	SNAP LINK Z/P 8MM X 80MM		BNH0065	5
42	BALL BEARING #W516, (1641-2RS-NR)		BNH0628	2	105	NYLON ANKLE STRAP		BNH3203	1
43	BUTTON HEAD SOCKET CAP SCREW GR-8 Z/P 1/4-20 X 3/4		BNH2995	1	106	HEX KEY M6		BNH3718	1
44	BRONZE BUSHING 1 X 1 1/4 X 3/4 X 1 1/2 X 1/8		BNH0527	2	107	SOCKET HEAD CAP SCREW Z/P M8X12		BNH3332	2
45	BRONZE BUSHING SAE 841 (302033) .502X.628 X 1/2 X 7/8 X 1/8		BNH0528	6	108	SOCKET HEAD CAP SCREW Z/P M8X20		BNH3326	1
46	BUTTON HEAD SOCKET CAP SCREW Z/P 1/2-13 X 3 3/4		BNH2994	1	109	SOCKET SET SCREW Z/P 1/4-20 X 1/4		BNH3263	6
47	BUTTON HEAD SOCKET CAP SCREW Z/P 1/4-20 X 3/4		BNH2995	16	110	SOCKET SET SCREW Z/P 1/4-20 X 3/8		BNH3262	2
48	BUTTON HEAD SOCKET CAP SCREW Z/P 3/8-16 X 1 1/4		BNH2034	6	111	SOCKET SET SCREW Z/P 10-32 X 1/8		BNH2088	3
49	BUTTON HEAD SOCKET CAP SCREW Z/P 3/8-16 X 2 3/4		BNH2996	2	112	SPLIT HEX TAP BOLT Z/P 1/2 -13 X 3 1/2 (RND CUT)		BNH2977	2
50	BUTTON HEAD SOCKET CAP SCREW Z/P 3/8-16 X 3 3/4		BNH3336	1	113	SPLIT LOCK WASHER Z/P 1/2"		BNH0572	9
51	BUTTON HEAD SOCKET CAP SCREW Z/P 3/8-16 X 3/4		BNH3341	2	114	ALERT SIGN FOR HOME 8 1/2 X 11		BNH3139	1
52	BUTTON HEAD SOCKET CAP SCREW Z/P 3/8-16 X 1		BNH2033	8	115	SPLIT LOCK WASHER Z/P 3/8"		BNH2520	22
53	BUTTON HEAD SOCKET CAP SCREW Z/P 3/8-16 X 1 3/4		BNH2426	12	116	SPLIT LOCK WASHER Z/P 5/16"		BNH2070	2
54	BUTTON HEAD SOCKET CAP SCREW Z/P 3/8-16 X 2 1/2		BNH3316	3	117	COIL CHAIN Z/P 3/16 X 12		BNH2055	1
55	BUTTON HEAD SOCKET CAP SCREW Z/P 5/16-18 X 1		BNH3261	2	118	STRAP BRACKET 20 #SF20 STAINLESS STEEL		BNH0562	3
56	CABLE STOPPER SHELL 1 1/2 X 1 3/4		BNH4230	3	119	URETHANE BUMPER 962		BNH0244	1
57	1" RD ID X 1 1/2 RD OD X 1 1/2 STOPPER		BNH3334	2	120	U-STYLE TAPPED HOLE NUT 1/4-20		BNH0708	12
58	COIL CHAIN Z/P 3/16 X 8		BNH1214	1	121	WEIGHT STACK LID		BNH3267	1
59	RUBBER FOOT FOR 6 X 4 1/4 PLATE		BNH1647	3	122	YELLOW GRIP .50 X 4.75 DBL DIP. PUNCHED		BNH1514	2
60	FINISHED HEX NUT Z/P 1/2-13		BNH0206	7	123	LABEL-AXT-225 EXERCISE CHART		BNH3166	1
61	FLAT WASHER SAE Z/P 1/2"		BNH2031	8	124	LABEL-DANGER DO NOT REMOVE... 7/8 X 1-1/2		BNH2906	2
62	FLAT WASHER SAE Z/P 3/8"		BNH2030	53	125	LABEL-WARNING SERIOUS INJURY OR DEATH		BNH3157	1
63	FLAT WASHER Z/P M8		BNH3366	1	126	OVAL WASHER Z/P 3/8"		BNH3349	17

Parts List Continued

COLOR CHART
GRAY= SUB-ASSEMBLY PARTS
BLACK= HARDWARE

AXT-225

Parts List

Item No.	Description	Rev.	Part No.	Qty.	Item No.	Description	Rev.	Part No.	Qty.
127	TFI EMBLEM 2.26 HIGH X 2.3770 WIDE BLUE AND CHROME		BNH4304	2	136	LABEL-IMPORTANT ADJUST CABLE TENSION HERE		BNH2924	4
128	LABEL-NUMBERS 10-200 LBS/KGS 7/8 X 3 YELLOW & BLACK		BNH4069	1	137	LABEL-IMPORTANT FOR SMOOTH PERFORMANCE		BNH2925	1
129	LABEL-CAUTION CHECK PULL-PIN IS FULLY…		BNH2912	4	138	LABEL-INSPECTIONS RECOMMENDED INSPECTION…		BNH3155	1
130	LABEL-DANGER CHECK RETAINING NUT... 1.5 X 1		BNH3146	3	139	ANTI-TWIST CABLE	0	UP8528	1
131	LABEL-IMPORTANT CHECK CABLES		BNH3113	1	140	LABEL-TFI SERIAL NO. 2.5 X 1.5		BNH3147	1
132	LABEL-IMPORTANT FOR SMOOTH PERFORMANCE...		BNH2916	2	141	LABEL-WARNING ATTENTION USERS!... 2X1.5		BNH2911	1
133	LABEL-TFI SERIAL NO. 2.5 X 1.5		BNH3147	1	142	LABEL-WARNING DO NOT USE FOR CHINNING...		BNH2923	1
134	LABEL-DANGER DO NOT LEAN AGAINST, 1.75X2.375		BNH3145	1	143	LABEL-WARNING KEEP BODY, HANDS... 1X2-5/8		BNH2926	1
135	LABEL-DANGER USE THIS EQUIPMENT ONLY...		BNH2903	1	144	NYLON INSERT LOCK NUT Z/P 5/16-18		BNH2056	2

PRE ASSEMBLED COMPONENTS

Item No.	Description	Rev.	Part No.	Qty.	Item No.	Description	Rev.	Part No.	Qty.
*3	ADJUSTABLE DOUBLE PULLEY BRACKET	0	UP7719X1	1	*23	REAR FRAME	0	UP7745X1	1
*7	BASE FRAME	1	UP7739X1	1	*24	TOP FRAME	1	UP7868X1	1
*8	FLOATING PULLEY BRACKET	1	UP3733X1	1	*32	TOP GUIDE ROD HOUSING	0	UP7741X1	1
*12	FRONT UPRIGHT	0	UP7740X1	1	*33	WEIGHT SHIELD REAR	0	UP7762X1	1
*20	PRESS BAR	0	UP7743X1	1	*150	WEIGHT SHIELD FRONT	0	UP7762X2	1
*21	PRESS BAR HOUSING	0	UP7748X1	1	*151	ADJUSTABLE DOUBLE PULLEY BRACKET	0	UP7719X2	1

Pre Assembled Components

*7 UP7739X1

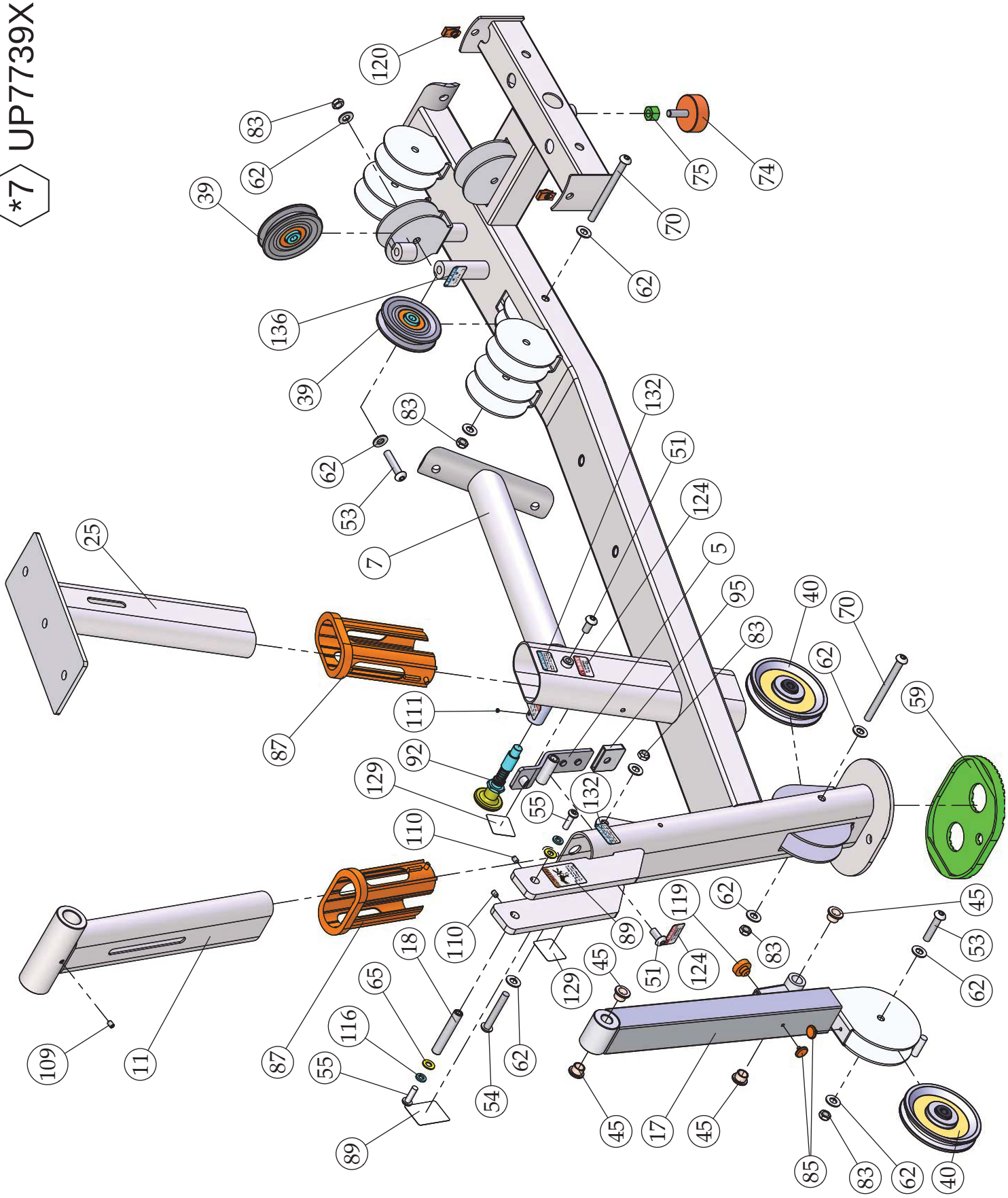

Pre Assembled Components

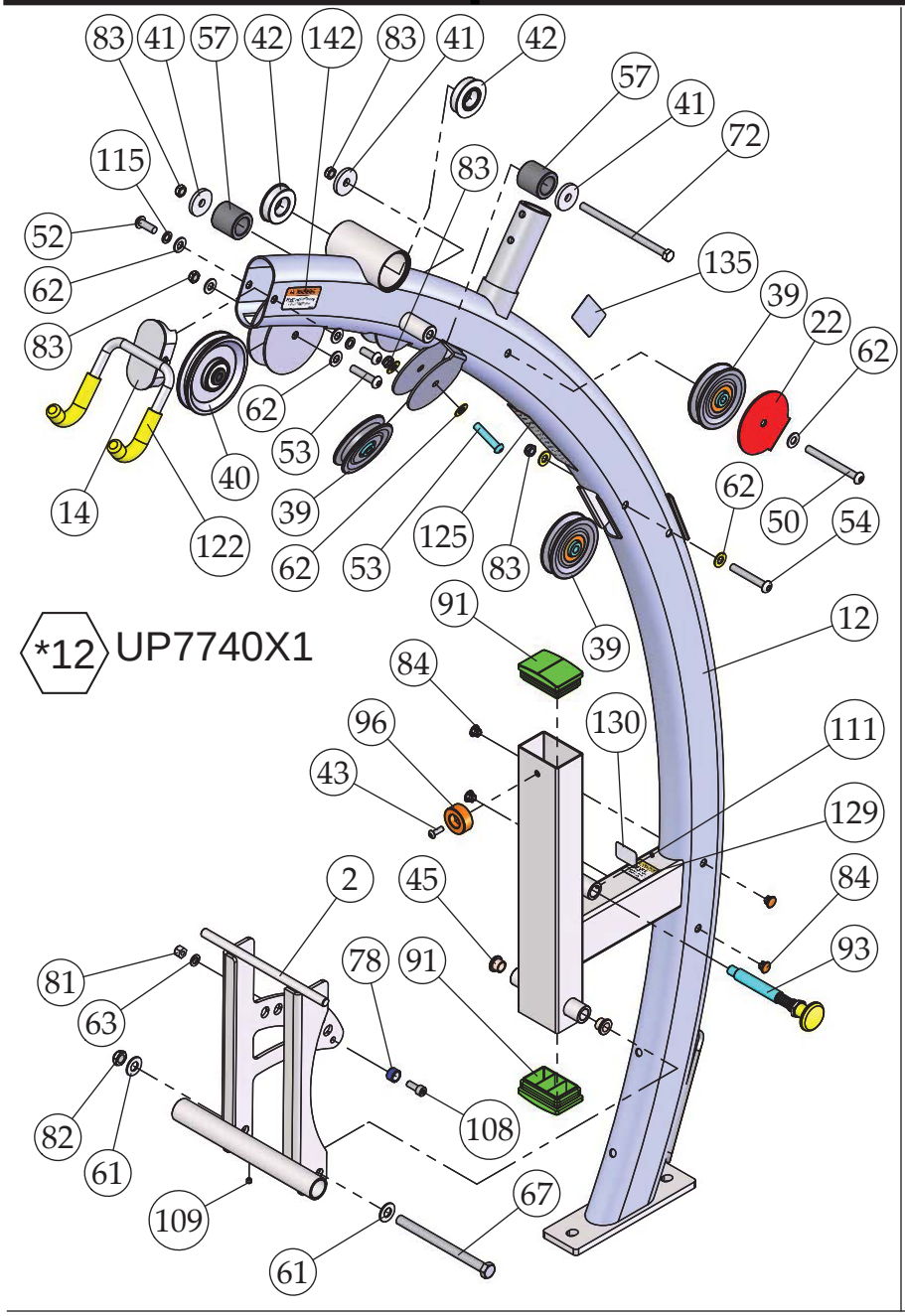

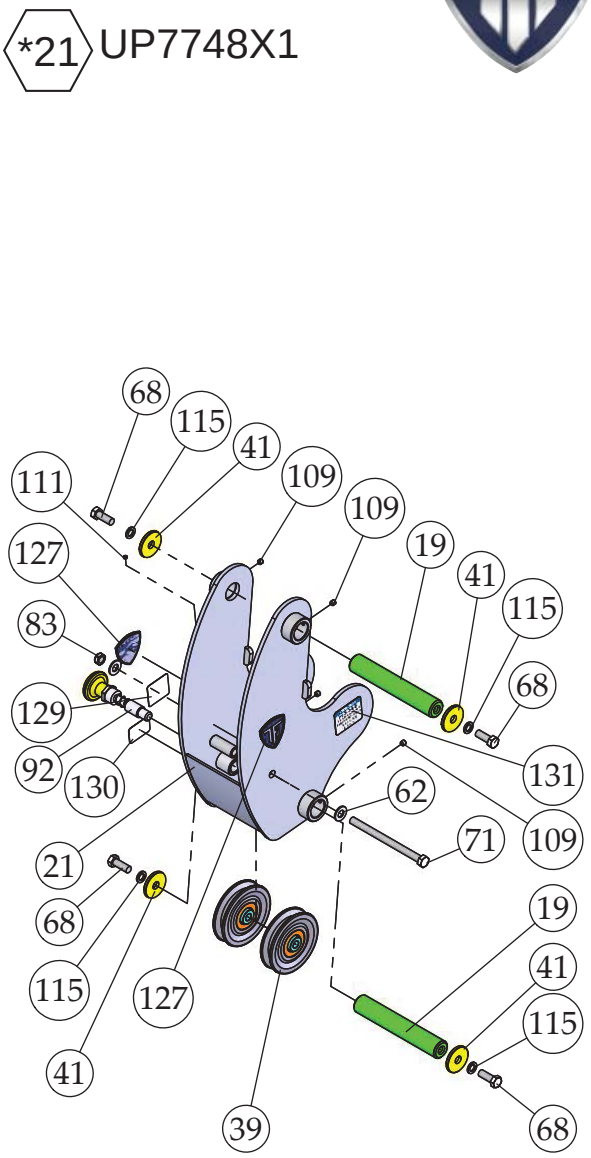

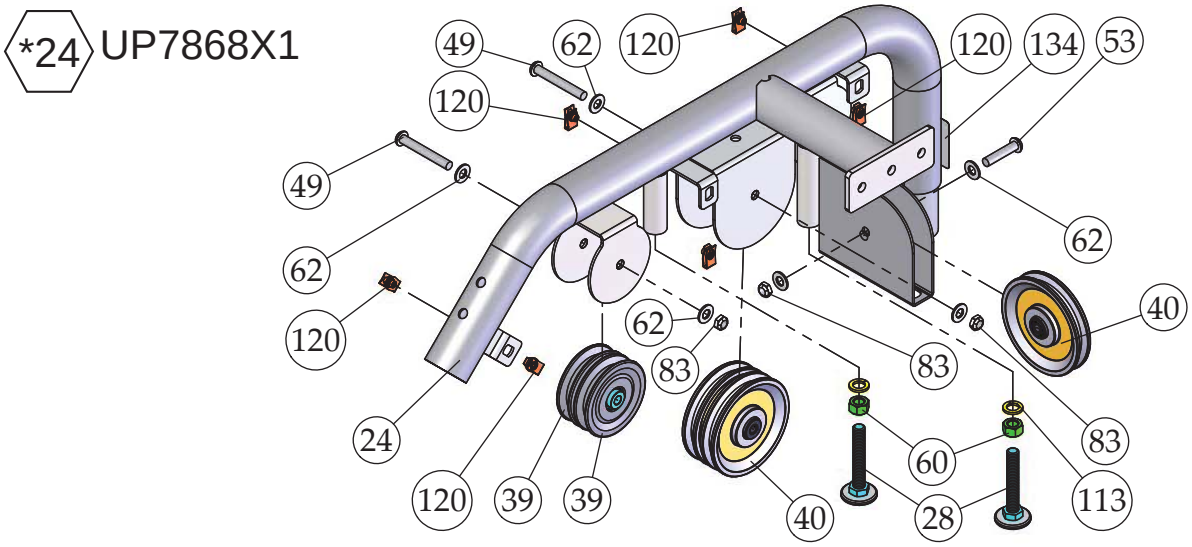

Pre Assembled Components

*20 UP7743X1

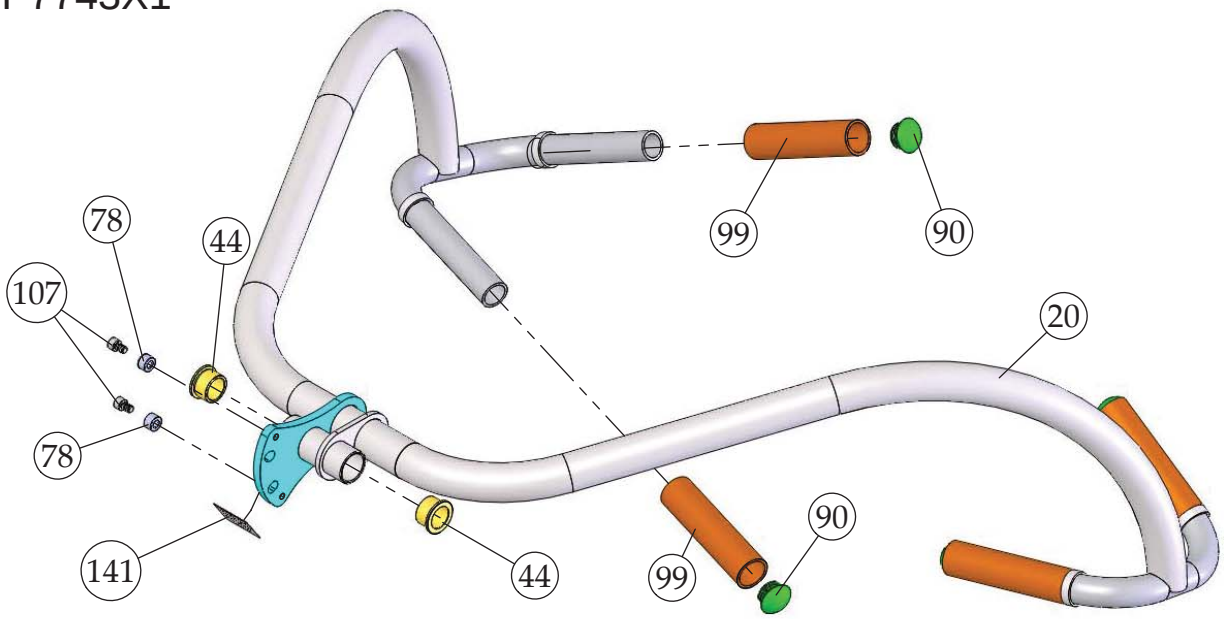

*8 UP7753X1

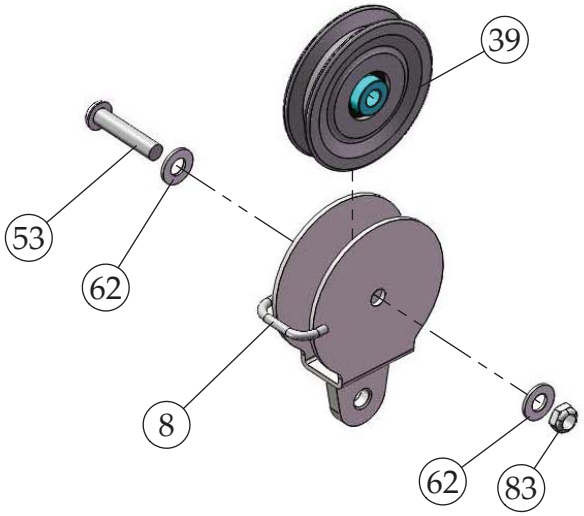

*23 UP7745X1

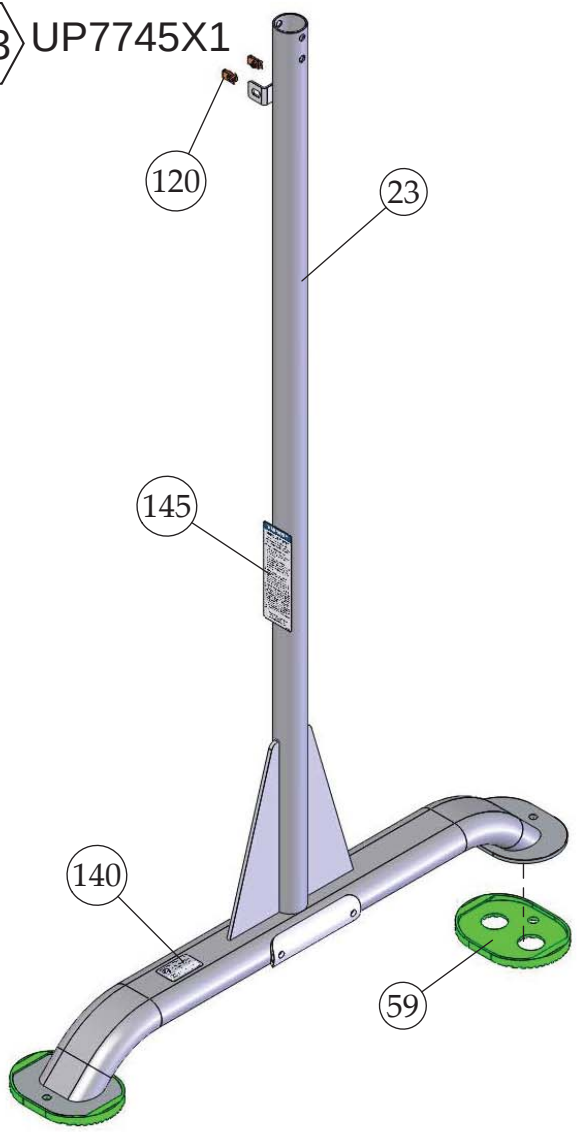

*32 UP7741X1

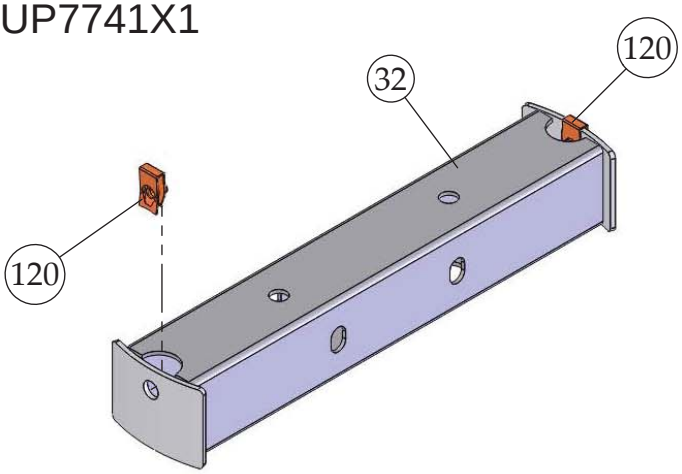

Pre Assembled Components

*3 UP7719X1

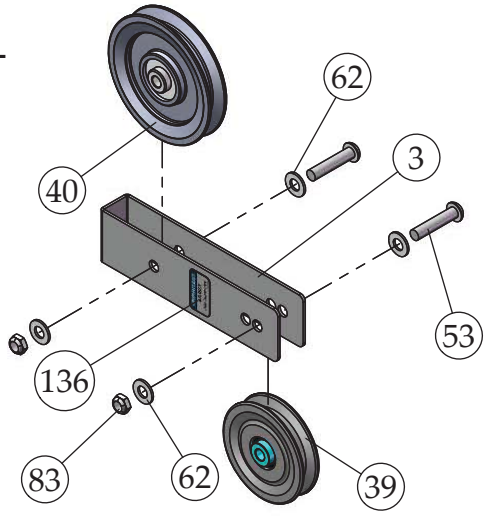

*151 UP7719X2

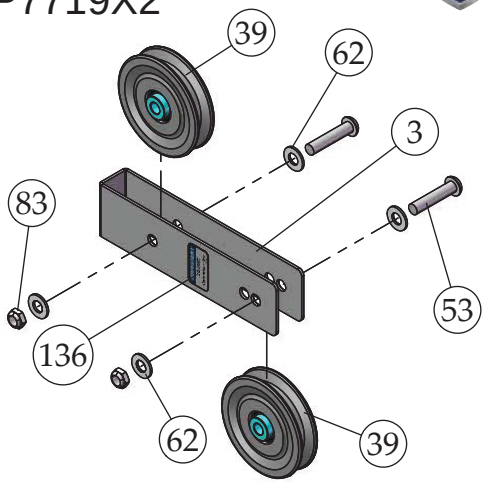

*150 UP7762X2

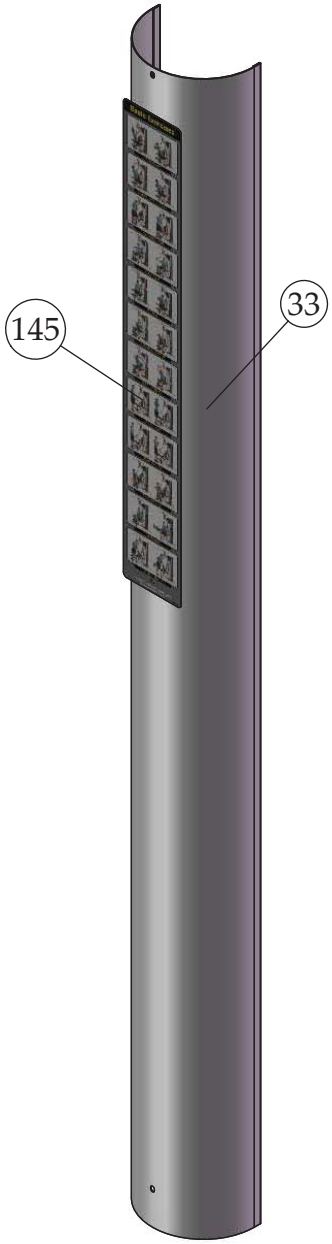

*33 UP7762X1

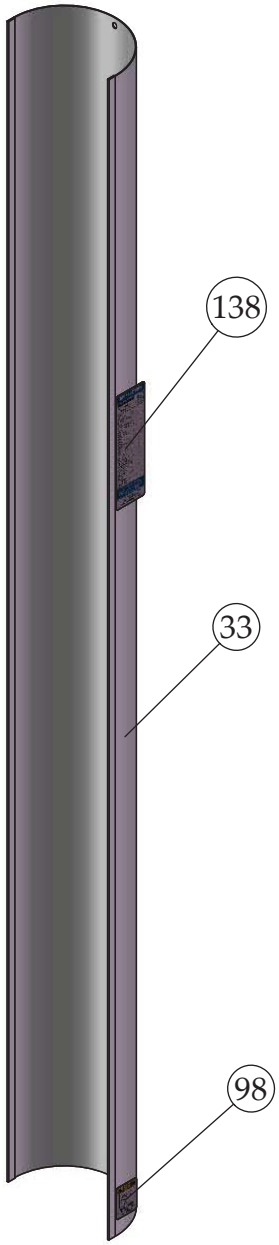

Basic Exercise Guide

Use this equipment only for the exercises as shown. Know your limitations. If you are new to weight training, always start with lighter weight, learn how to perform the exercise correctly and train at a controlled rate of speed. Warm up properly with stretchings, calisthenics or cardiovascular exercises. Never hold your breath – general rule of thumb is to exhale when you exert.

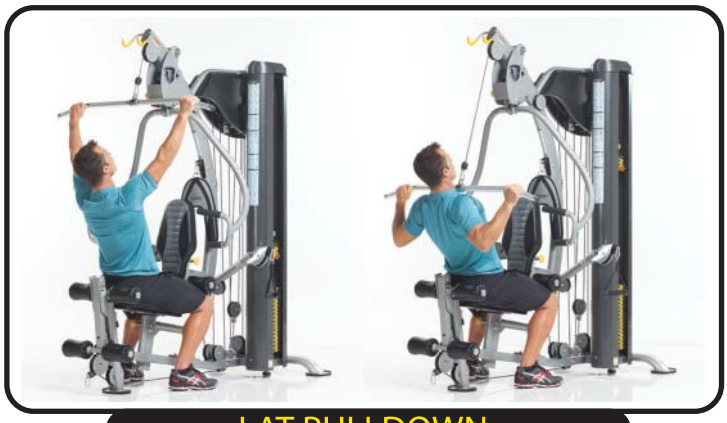

LAT PULLDOWN

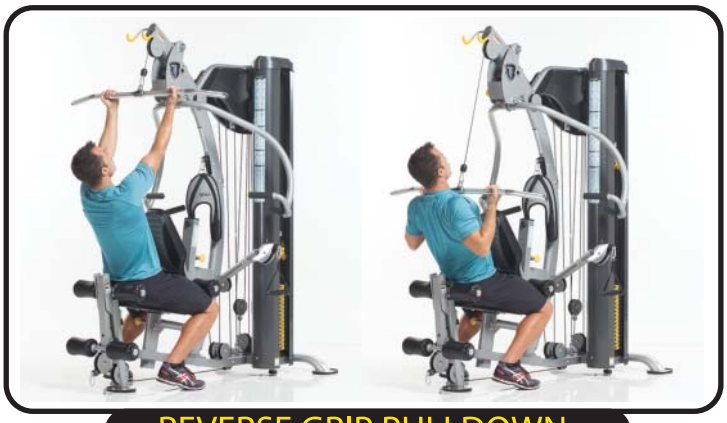

REVERSE GRIP PULLDOWN

TRICEP PRESSDOWN

CHEST PRESS

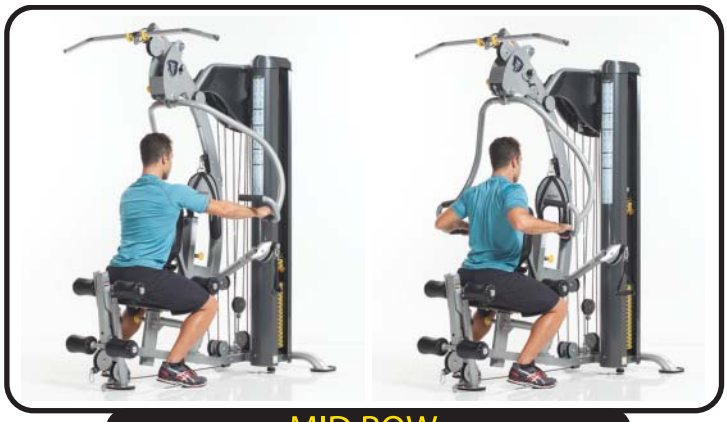

MID ROW

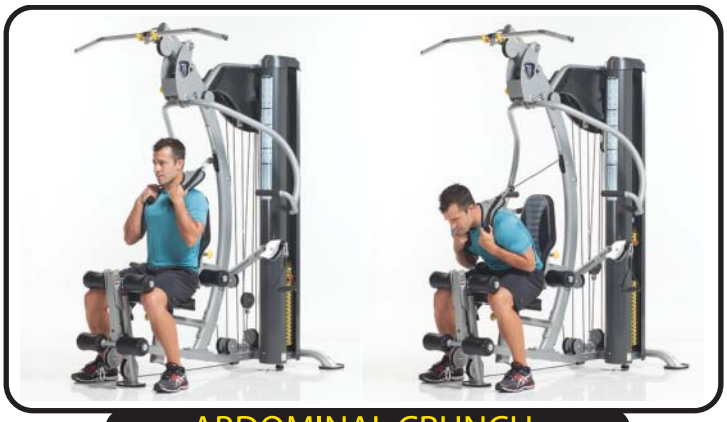

ABDOMINAL CRUNCH

Basic Exercise Guide

Use this equipment only for the exercises as shown. Know your limitations. If you are new to weight training, always start with lighter weight, learn how to perform the exercise correctly and train at a controlled rate of speed. Warm up properly with stretchings, calisthenics or cardiovascular exercises. Never hold your breath – general rule of thumb is to exhale when you exert.

TRICEP EXTENSION

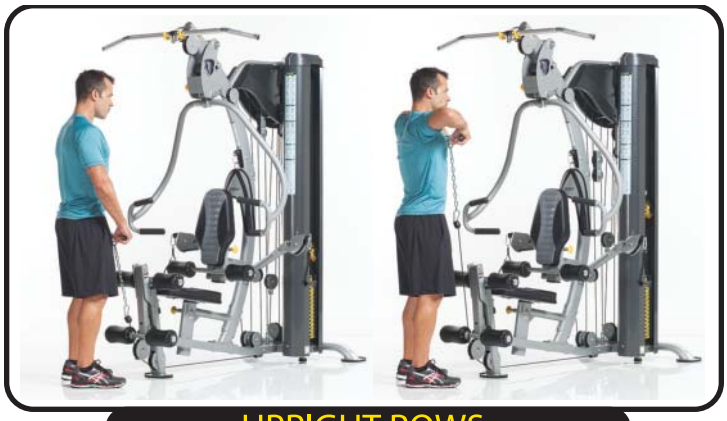

UPRIGHT ROWS

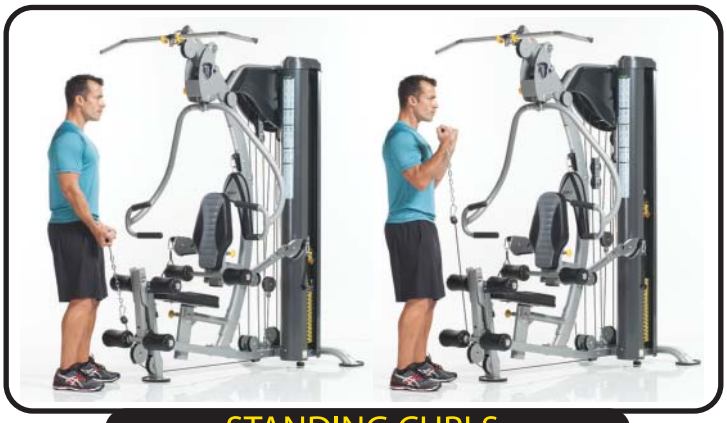

STANDING CURLS

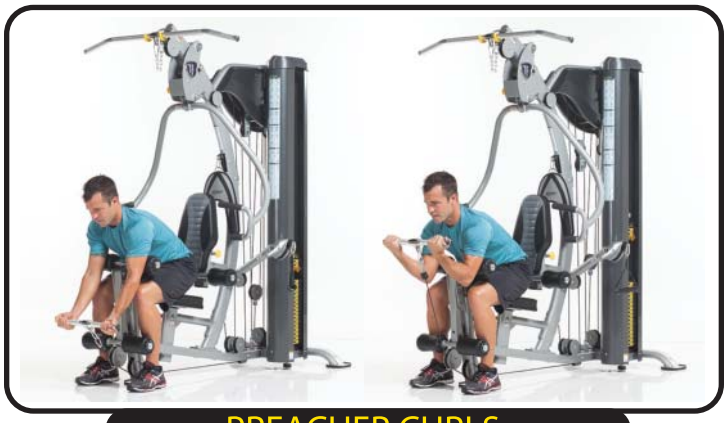

PREACHER CURLS

LEG EXTENSION

STANDING LEG CURL

TUFFSTUFF WARRANTY

TuffStuff warrants to the original purchaser that TuffStuff equipment will be free from defects in material and workmanship. All warranty periods begin to run from the date of purchase to the original purchaser. The warranty and remedies set forth herein are conditioned upon proper storage, installation, use and maintenance and conformance with any recommendations of TuffStuff. This warranty does not cover products not manufactured by TuffStuff or products which are altered without the express written consent of TuffStuff.

HOME LIFETIME WARRANTY*:

LIFETIME of the equipment while owned by the original purchaser (applies only to defects from manufacturer only).

***This warranty does not cover:**

1. TuffStuff products sold for and used in a commercial or institutional environment.
2. Any damage, failure or loss caused by accident, misuse, neglect, abuse, improper assembly, improper maintenance, or failure to follow instructions or warnings in the owner's manual and warning labels posted on the machines.
3. Use of this apparatus in a manner for which it was not designed.
4. Original product that is altered, or the use of replacement parts and components of another manufacturer other than TuffStuff.

The obligation of TuffStuff under this warranty is limited to repairing or replacing warranted defective parts as TuffStuff may elect, at TuffStuff's facility in Chino, California, without charge to the purchaser. Purchaser is responsible for installation of repaired or replaced parts, and all transportation and insurance costs on returned or replaced equipment to and from TuffStuff's facility in Chino.

THE FOREGOING SHALL CONSTITUTE THE SOLE REMEDY OF THE PURCHASER AND THE SOLE LIABILITY OF TUFFSTUFF WITH REGARD TO WARRANTY, WHETHER EXPRESS OR IMPLIED BY OPERATION OF LAW OR OTHERWISE, INCLUDING BUT NOT LIMITED TO ANY IMPLIED WARRANTIES OF MERCHANTABILITY OR FITNESS. TUFFSTUFF SHALL IN NO EVENT BE LIABLE FOR INCIDENTAL OR CONSEQUENTIAL LOSSES, DAMAGES, OR EXPENSES IN CONNECTIONS WITH EXERCISE PRODUCTS. TUFFSTUFF'S LIABILITY HERE-UNDER IS EXPRESSLY LIMITED TO THE REPAIRS OR REPLACEMENTS OF WARRANTED DEFECTIVE PARTS.

This written warranty is the final, complete and exclusive agreement of the parties with respect to the quality or performance of the equipment and no action for breach of this written warranty or any implied warranty shall be commenced more than one (1) year after the accrual of the cause of action. No modification of this warranty or waiver of its terms shall be binding on either party unless approved in writing by an authorized representative of the party. Contact TuffStuff Fitness International, Inc. at 13971 Norton Avenue, Chino, CA 91710, before returning any defective equipment.

This warranty gives you specific legal rights and you may also have other rights, which may vary from state to state.

SERIAL # _____

Write your Serial number here for future reference

_____

Purchase Date

TuffStuff Fitness International, Inc.
13971 Norton Avenue, Chino, CA 91710, USA. Ph 909-629-1600 Fx 909-629-4967
www.tuffstuffitness.com service@tuffstuff.net or service1@tuffstuff.net