TUFFSTUFF FITNESS INTERNATIONAL

OWNER'S MANUAL

Maintenance & Assembly Instructions

IMPORTANT: KEEP THIS MANUAL FOR FUTURE REFERENCE

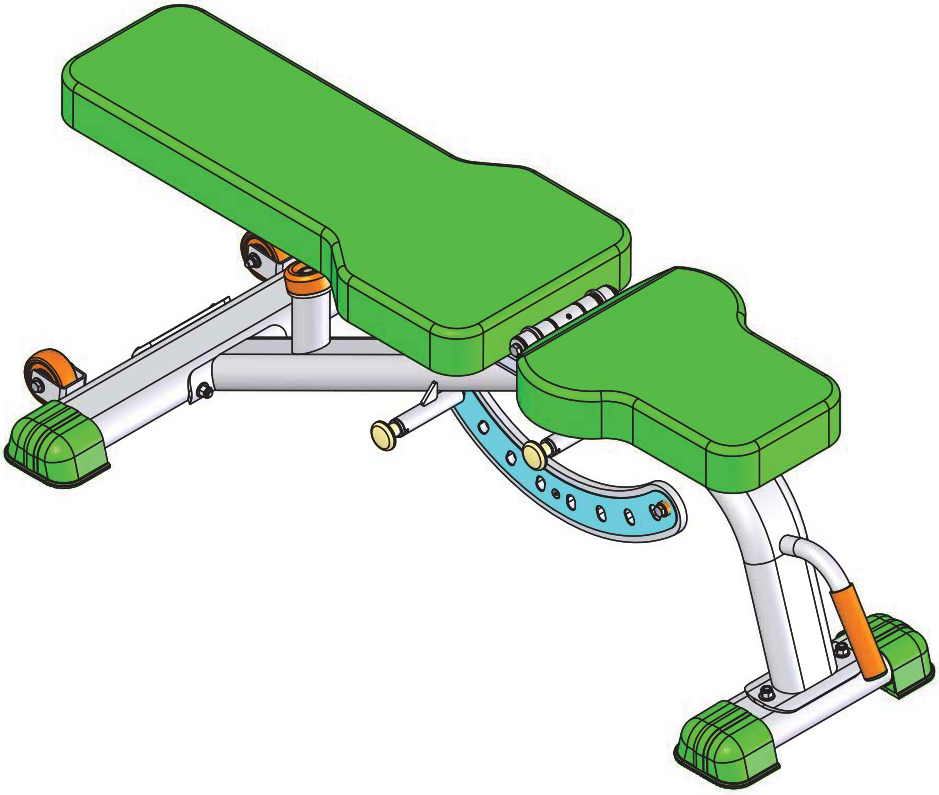

NOTICE

It is the Purchaser's/Owner's obligation:

1. To disclose and post all Rules & Regulations, Danger, Warning and Caution labels affixed on the machine to their customers/users.
2. Equipment to be installed by TFI Authorized Dealer or a service company approved by TFI.
3. Provide trained personnel, supervision and correct usage of the equipment.
4. Provide scheduled inspection, maintenance & repairs and must be performed by TFI Authorized Dealer or a service company approved by TFI.
5. Must use only genuine TuffStuff replacement parts.

CDM-400

Deluxe Flat/Incline Bench

CDM-400_Rev0
Revision Date 11-23-2015

Table of Contents

OVERHEAD SPECIFICATIONS ..... Page 3
DANGER, WARNING, & CAUTION LABELS INFORMATION ..... Page 4-6
IMPORTANT SAFETY INSTRUCTIONS ..... Page 7
REGISTRATION, SERVICE & ASSEMBLY ..... Page 8
INSPECTION/MAINTENANCE ..... Page 9
ASSEMBLY STEPS ..... Page 10-13
PARTS LIST ..... Page 14
EXPLODED VIEW ..... Page 15
WARRANTY ..... Page 16

TuffStuff Fitness International Inc. continually engages in research related to product improvements. Please take the time to carefully read through this owner's manual thoroughly. Instructions contained in this owner's manual are not intended to cover all details or variations possible with equipment, or to cover every contingency that may be met in conjunction with assembly, installation, operation, maintenance or troubleshooting of the equipment. Even though we have prepared this owner's manual with extreme care, neither the manufacturer nor the author can accept responsibility for any errors in, or omission from, the information given. Should additional information be required, or should situations arise that are not covered by this owner's manual, the matter should be directed to Customer Service at TuffStuff Fitness International Inc. in Chino, California.

Overhead Specifications

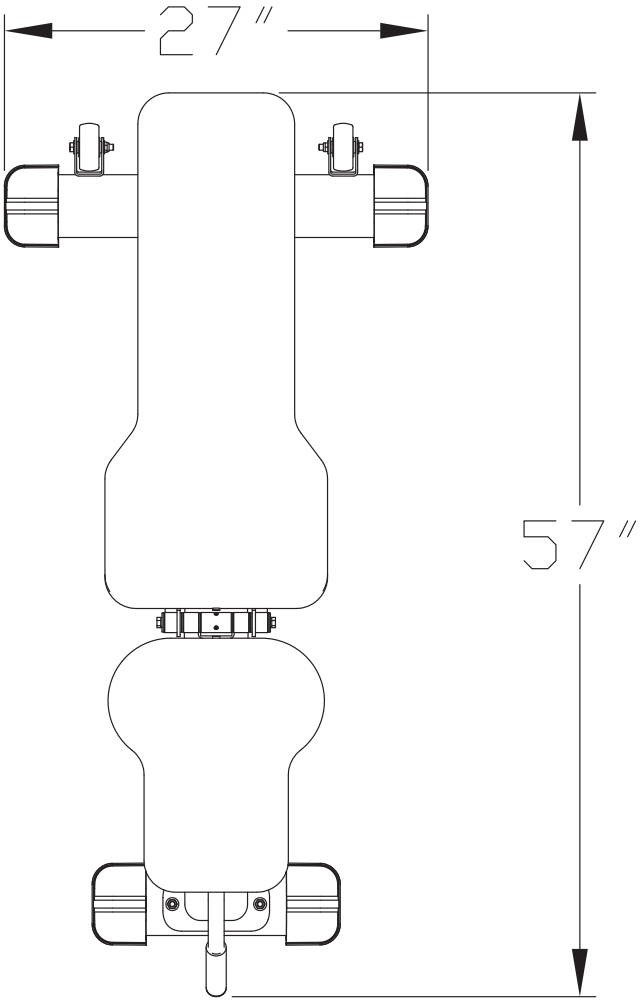

L 57″ X W 27″ X H 41″
PRODUCT WEIGHT 82 lbs.
MAX-LOAD WEIGHT LIMIT 800 lbs. W/USER

Carefully read ALL Danger, Warning & Caution labels posted on the machine

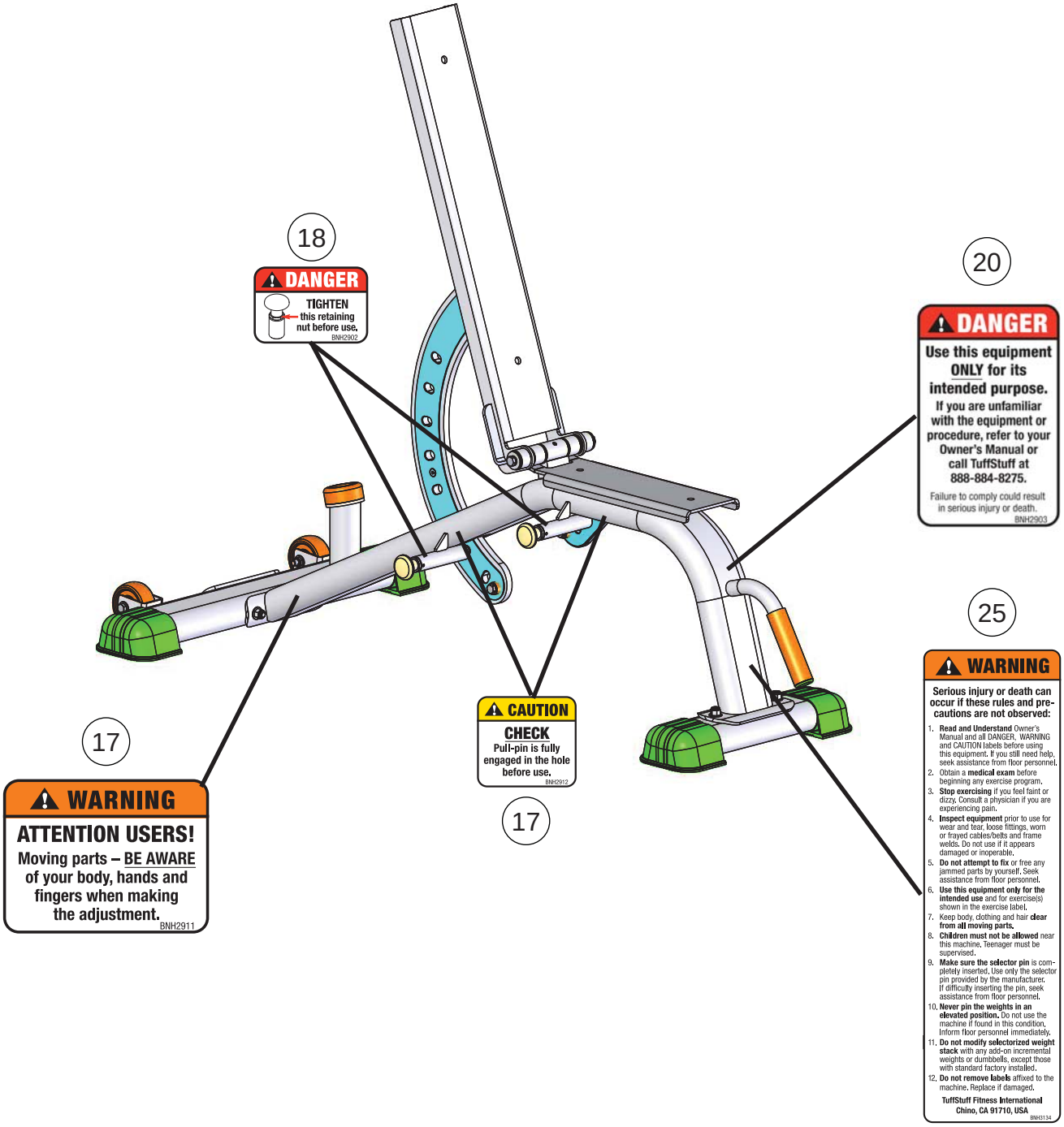

Carefully read ALL Danger, Warning & Caution labels posted on the machine

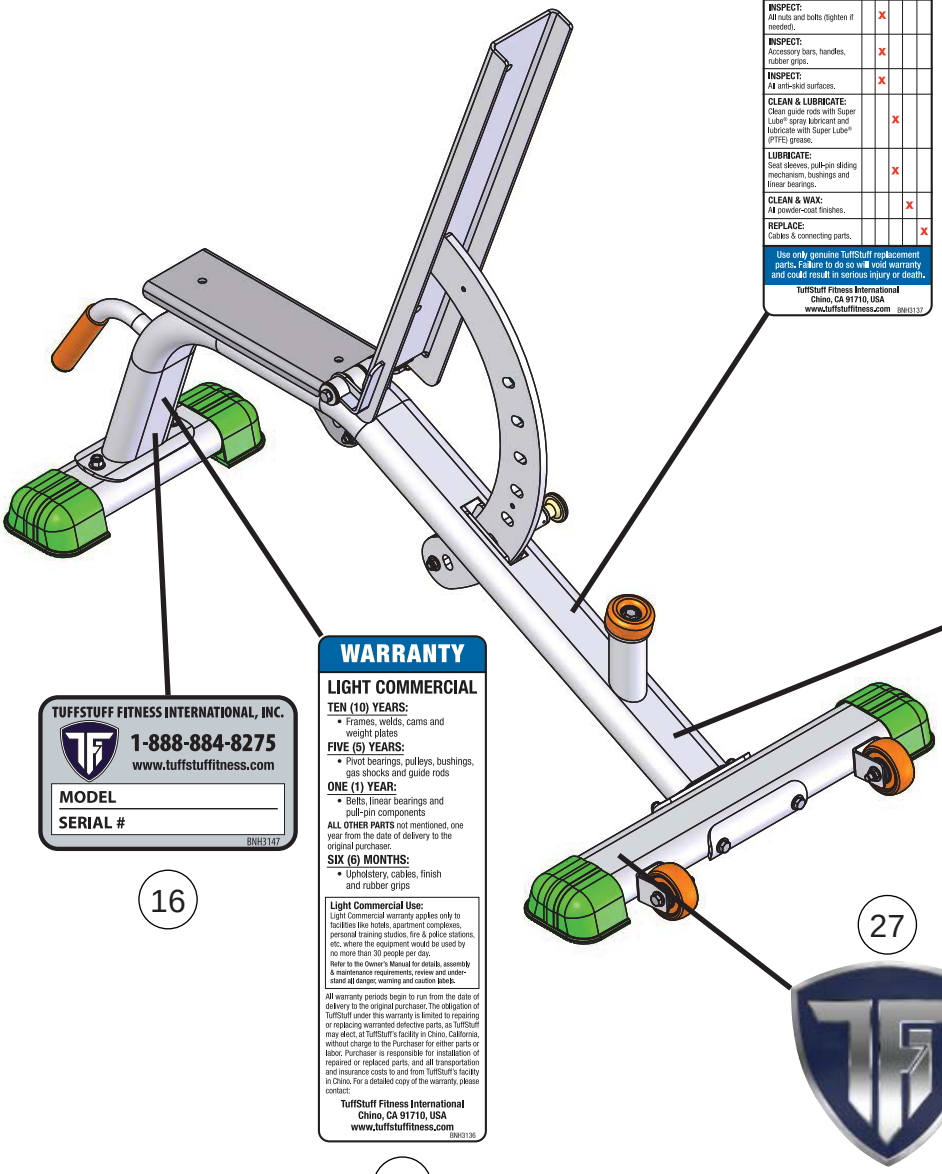

22

INSPECTIONS

Recommended Inspection Replace all parts at first signs of wear or damage.	DAILY	WEEKLY	MONTHLY	6-MONTH	YEARLY
INSPECT: Links, pull-pins, snap locks, swivels, connectors, selector pin, and welded-joints.	X				
CLEAN: Upholstery with lanolin-base cleaner. Do not use Windex.	X				
INSPECT: Cables, Belts and tension (adjust if needed).	X				
INSPECT: All labels		X			
INSPECT: All nuts and bolts (tighten if needed).		X			
INSPECT: Accessory bars, handles, rubber grips.		X			
INSPECT: All anti-skid surfaces.		X			
CLEAN & LUBRICATE: Clean guide rods with Super Lube® spray lubricant and lubricate with Super Lube® (PTFE) grease.			X		
LUBRICATE: Seat sleeves, pull-pin sliding mechanism, bushings and linear bearings.			X		
CLEAN & WAX: All powder-coat finishes.				X	
REPLACE: Cables & connecting parts.					X

Use only genuine TuffStuff replacement parts. Failure to do so will void warranty and could result in serious injury or death.

TuffStuff Fitness International
Chino, CA 91710, USA
www.tuffstuffitness.com BNH3137

23

SCHEDULE
Replacement Parts

Recommended TuffStuff Parts (replace or as needed)	9-MONTH	12-MONTH	15-MONTH	18-MONTH
Upholstery	X			
Foam Rolls	X			
Cables		X		
Rubber Grips		X		
Nylon Handles			X	
Pull-Pins			X	
Plastic Guides			X	
Weight Selector Pin			X	
Abdominal Strap			X	
Adj. Release Handle				X
Black Caster Wheels				X
Buckle Seat/Belt				X
Labels (as needed)				

Use only TuffStuff replacement parts when servicing. Failure to do so will void warranty on product and could result in personal injury.

TuffStuff Fitness International
13971 Norton Avenue
Chino, CA 91710
BNH3135

TUFFSTUFF FITNESS INTERNATIONAL, INC.
1-888-884-8275
www.tuffstuffitness.com

MODEL _____

SERIAL # _____

BNH3147

16

WARRANTY

LIGHT COMMERCIAL

TEN (10) YEARS:
- Frames, welds, cams and weight plates

FIVE (5) YEARS:
- Pivot bearings, pulleys, bushings, gas shocks and guide rods

ONE (1) YEAR:
- Belts, linear bearings and pull-pin components

ALL OTHER PARTS not mentioned, one year from the date of delivery to the original purchaser.

SIX (6) MONTHS:
- Upholstery, cables, finish and rubber grips

Light Commercial Use:
Light Commercial warranty applies only to facilities like hotels, apartment complexes, personal training studios, fire & police stations, etc. where the equipment would be used by no more than 30 people per day.

Refer to the Owner's Manual for details, assembly & maintenance requirements, review and understand all danger, warning and caution labels.

All warranty periods begin to run from the date of delivery to the original purchaser. The obligation of TuffStuff under this warranty is limited to repairing or replacing warranted defective parts, as TuffStuff may elect, at TuffStuff's facility in Chino, California, without charge to the Purchaser for either parts or labor. Purchaser is responsible for installation of repaired or replaced parts, and all transportation and insurance costs to and from TuffStuff's facility in Chino. For a detailed copy of the warranty, please contact:

TuffStuff Fitness International
Chino, CA 91710, USA
www.tuffstuffitness.com
BNH3136

26

27

Carefully read ALL Danger, Warning & Caution labels posted on the machine

22

INSPECTIONS

Recommended Inspection Replace all parts at first signs of wear or damage.	DAILY	WEEKLY	MONTHLY	6-MONTH	YEARLY
INSPECT: Links, pull-pins, snap locks, swivels, connectors, selector pin, and welded-joints.	X				
CLEAN: Upholstery with lanolin-base cleaner. Do not use Windex.	X				
INSPECT: Cables, Belts and tension (adjust if needed).	X				
INSPECT: All labels		X			
INSPECT: All nuts and bolts (tighten if needed).		X			
INSPECT: Accessory bars, handles, rubber grips.		X			
INSPECT: All anti-skid surfaces.		X			
CLEAN & LUBRICATE: Clean guide rods with Super Lube® spray lubricant and lubricate with Super Lube® (PTFE) grease.			X		
LUBRICATE: Seat sleeves, pull-pin sliding mechanism, bushings and linear bearings.			X		
CLEAN & WAX: All powder-coat finishes.				X	
REPLACE: Cables & connecting parts.					X

Use only genuine TuffStuff replacement parts. Failure to do so will void warranty and could result in serious injury or death.

TuffStuff Fitness International
Chino, CA 91710, USA
www.tuffstuffitness.com BNH3137

23

SCHEDULE
Replacement Parts

Recommended TuffStuff Parts (replace or as needed)	9-MONTH	12-MONTH	15-MONTH	18-MONTH
Upholstery	X			
Foam Rolls	X			
Cables		X		
Rubber Grips		X		
Nylon Handles			X	
Pull-Pins			X	
Plastic Guides			X	
Weight Selector Pin			X	
Abdominal Strap			X	
Adj. Release Handle				X
Black Caster Wheels				X
Buckle Seat/Belt				X
Labels (as needed)				

Use only TuffStuff replacement parts when servicing. Failure to do so will void warranty on product and could result in personal injury.

TuffStuff Fitness International
13971 Norton Avenue
Chino, CA 91710
BNH3135

25

WARNING

Serious injury or death can occur if these rules and precautions are not observed:

1. **Read and Understand** Owner's Manual and all DANGER, WARNING and CAUTION labels before using this equipment. If you still need help, seek assistance from floor personnel.
2. Obtain a **medical exam** before beginning any exercise program.
3. **Stop exercising** if you feel faint or dizzy. Consult a physician if you are experiencing pain.
4. **Inspect equipment** prior to use for wear and tear, loose fittings, worn or frayed cables/belts and frame welds. Do not use if it appears damaged or inoperable.
5. **Do not attempt to fix** or free any jammed parts by yourself. Seek assistance from floor personnel.
6. **Use this equipment only for the intended use** and for exercise(s) shown in the exercise label.
7. Keep body, clothing and hair **clear from all moving parts.**
8. **Children must not be allowed** near this machine. Teenager must be supervised.
9. **Make sure the selector pin** is completely inserted. Use only the selector pin provided by the manufacturer. If difficulty inserting the pin, seek assistance from floor personnel.
10. **Never pin the weights in an elevated position.** Do not use the machine if found in this condition. Inform floor personnel immediately.
11. **Do not modify selectorized weight stack** with any add-on incremental weights or dumbbells, except those with standard factory installed.
12. **Do not remove labels** affixed to the machine. Replace if damaged.

TuffStuff Fitness International
Chino, CA 91710, USA
BNH3134

26

WARRANTY

LIGHT COMMERCIAL

TEN (10) YEARS:
- Frames, welds, cams and weight plates

FIVE (5) YEARS:
- Pivot bearings, pulleys, bushings, gas shocks and guide rods

ONE (1) YEAR:
- Belts, linear bearings and pull-pin components

ALL OTHER PARTS not mentioned, one year from the date of delivery to the original purchaser.

SIX (6) MONTHS:
- Upholstery, cables, finish and rubber grips

Light Commercial Use:
Light Commercial warranty applies only to facilities like hotels, apartment complexes, personal training studios, fire & police stations, etc. where the equipment would be used by no more than 30 people per day.
Refer to the Owner's Manual for details, assembly & maintenance requirements, review and understand all danger, warning and caution labels.

All warranty periods begin to run from the date of delivery to the original purchaser. The obligation of TuffStuff under this warranty is limited to repairing or replacing warranted defective parts, as TuffStuff may elect, at TuffStuff's facility in Chino, California, without charge to the Purchaser for either parts or labor. Purchaser is responsible for installation of repaired or replaced parts, and all transportation and insurance costs to and from TuffStuff's facility in Chino. For a detailed copy of the warranty, please contact:

TuffStuff Fitness International
Chino, CA 91710, USA
www.tuffstuffitness.com
BNH3136

19

DANGER

Do Not REMOVE This Safety Bolt.
BNH2906

27

21

IMPORTANT

For smooth performance, lubricate all gliding surfaces with silicone spray lubricant.
BNH2916

38

BE ALERT!

THE FITNESS EQUIPMENT IN THIS FACILITY PRESENTS HAZARDS WHICH, IF NOT AVOIDED, COULD CAUSE SERIOUS INJURY OR DEATH.

Prior to using the equipment, READ the warning labels and instruction placards affixed to each machine.

If you are unsure on how to use a machine, seek the assistance of our floor personnel. We will be happy to instruct you on how to use the equipment properly.

Immediately report any piece of equipment that is not functioning properly to our floor personnel so that it may be evaluated and service promptly.

DO NOT ATTEMPT to use or fix any piece of equipment that is not functioning properly.

ASTM F1749-96 TUFFSTUFF FITNESS INTERNATIONAL, CHINO, CA 91710
BNH3138

24

WARNING

Keep body, hands and fingers clear of all moving parts
BNH2908

18

DANGER

TIGHTEN this retaining nut before use.
BNH2902

17

CAUTION

CHECK
Pull-pin is fully engaged in the hole before use.
BNH2912

16

TUFFSTUFF FITNESS INTERNATIONAL, INC.
1-888-884-8275
www.tuffstuffitness.com
MODEL
SERIAL #
BNH3147

20

DANGER

Use this equipment ONLY for its intended purpose.
If you are unfamiliar with the equipment or procedure, refer to your Owner's Manual or call TuffStuff at 888-884-8275.
Failure to comply could result in serious injury or death.
BNH2903

Important Safety Instructions

It is the responsibility of the facility owner and/or owner of the equipment to review the Owner's Manual with their facility personnel and understand all Danger, Warning and Caution labels affixed on the machine. It is the responsibility of the floor personnel to instruct users on proper operation of the equipment and review all danger, warning and caution labels.

⚠ WARNING SERIOUS INJURY OR DEATH CAN OCCUR IF THESE SAFETY PRECAUTIONS ARE NOT OBSERVED:

1. Obtain a medical exam before beginning any exercise program.
2. Read and understand Owner's Manual and all **Danger, Warning and Caution** labels before using this equipment. If you still need help, seek assistance from floor personnel.
3. **Inspect the equipment** before each use for wear and tear, loose fittings, worn or frayed cables and frame welds. DO NOT USE if it appears to be inoperable or damaged.
4. Stop exercising if you feel faint or dizzy. Consult a physician if you are experiencing pain.
5. **Use this equipment only for the intended use.**
6. Keep body, clothing and hair clear from all moving parts. Do not attempt to free any jammed parts by yourself.
7. Always warm-up before and cool-down after weight training. Warm-up for 10-15 minutes with stretching and cardiovascular exercises. Cool-down should include light stretching exercises for 5-15 minutes.
8. Never hold your breath – will limit the flow of oxygen to your brain and may cause dizziness. The most often used breathing pattern is inhaling during least resistance and exhaling during maximum resistance.
9. Do not use accessories or accessory attachments that are not recommended by TFI.
10. Make sure selector pin is completely inserted. Use only the selector pin provided by the manufacturer.
11. Never pin the weights in an elevated position. Do not use the machine if found in this condition.

Facility Safety Guidelines and Practices

1. Read and understand the Owner's Manual before assembling, servicing or using the equipment.
2. Equipment to be installed by TFI Authorized Dealer or Professional Service Company approved by TFI.
3. Make sure each machine is set up and operated on a solid level surface. Do not install equipment on an uneven surface.
4. Provide an adequate safety perimeter between the machine, walls and other equipment to ensure that the facility has proper clearance for usage and training.
5. Post and disclose all safety, rules and regulations on a bulletin board easily accessible to users.
6. Perform regular maintenance (see Inspection Label). Pay special attention to areas most susceptible to wear and tear, including but not limited to cables, pulleys and rubber grips.
7. **Do not** lean against or pull on the framework, weight stack or any component at all times.
8. **Children must not** be allowed near the equipment. Teenager must be supervised.
9. Replace immediately all parts at first sign of wear or damage. If unable to replace worn or damaged components/parts, remove machine from service until the repair is made.
10. Use only genuine TuffStuff replacement parts. Failure to do so will void warranty and could result in serious injury or death to the users.
11. **Do not remove** any decals affixed to the machine. Replace if damaged.
12. **Do not alter or modify** the original manufacturer's weight stack with any add-on incremental weights, weight plates or dumbbells except those with standard factory installed option.
13. Maintain a service contract with a TFI Authorized Dealer or a Professional Service Company approved by TFI. Keep a service log of all maintenance and repair activities. NOTICE: It is the sole responsibility of the owner or facility operator to ensure that regular maintenance is performed.

⚠ DANGER

DANGER: indicates an imminently hazardous situation which, if not avoided, will result in death or serious injury.

⚠ WARNING

WARNING: indicates a potentially hazardous situation which, if not avoided, will result in death or serious injury.

⚠ CAUTION

CAUTION: indicates a hazardous situation which, if not avoided, could result in minor or moderate injury.

Registration, Service & Assembly

Thank you for purchasing the CDM-400 Deluxe Flat/Incline Bench. This machine is part of the TuffStuff line of quality strength training equipment. To maximize your use of the equipment, please study the Owner's Manual thoroughly.

Registration

To avoid unnecessary delays on warranty parts and to insure that a permanent record of your purchase is on file with our company, be sure to register online at www.tuffstuffitness.net or mail to address shown below within 10 days of purchase.

Obtaining Service

Please use this Owner's Manual as your guide to all parts included in your shipment. When ordering parts, you must specify the part number and description from this owner's manual. **Use only genuine TuffStuff replacement parts when servicing the equipment.** Failure to do so will void warranty and could result in serious injury or death.

For information about product operation or service:

Phone:	909-629-1600 Toll Free 888-884-8275
Fax:	909-629-4967
E-mail:	service@tuffstuff.net or service1@tuffstuff.net
Hours:	M–F 8:00 – 4:30 PST
Or write to:	TuffStuff Fitness International Inc. Customer Service 13971 Norton Avenue, Chino, CA 91710

Retain this Owner's Manual for future reference when ordering service or parts. To assist you better, please be prepared to provide the following information:

1. Model Number **2. Place of Purchase**
3. Serial Number **4. Part # and Description**

Required Tools

The basic tools that you will need to assemble the CDM-400 but are not limited to:

- 9/16" , 3/4", 1/2" combination wrenches
- Adjustable wrench
- Ratchet wrench with 9/16" , 3/4", 1/2" sockets
- External retaining ring pliers
- Rubber mallet, measuring tape & utility knife
- Super Lube® spray lubricant and grease
- Windex or household glass cleaner

Assembly Requirements

Follow these installation requirements when assembling the CDM-400. Use the overhead view on the Content Page to layout your floor plan before assembling.

Set up the CDM-400 on a clean, solid, flat surface. A smooth, flat surface under the machine helps keep it level.

Allow ample space around the machine for safe unrestricted use and easier access.

Insert all bolts in the same direction. For aesthetic appearance, insert all bolts in the same direction unless specified (in text or illustration) to do otherwise.

Leave room for adjustments. Do not fully tighten fasteners until instructed in the assembly steps to do so (to prevent any difficulty with alignment of parts during the assembly process). When not instructed, tighten fasteners such as bolts, nuts and screws so the unit is stable, but leave room for adjustments.

Assembly Tips

Read all "Notes" on each page before beginning each step.

While you may be able to assemble the CDM-400 using the illustrations only, IMPORTANT safety notes and other tips are included in the text.

Some pieces may have extra holes that you will not use. Use only those holes indicated in the instructions and illustration.

NOTE: With so many assembled parts, proper alignment and adjustment is critical. While tightening the nuts and bolts, be sure to leave room for final adjustments.

CAUTION: Obtain assistance from TFI if you have difficulty assembling the CDM-400. Please do not attempt to complete the assembly as this could result in equipment failure and serious injuries to the users.

Symbols & Description

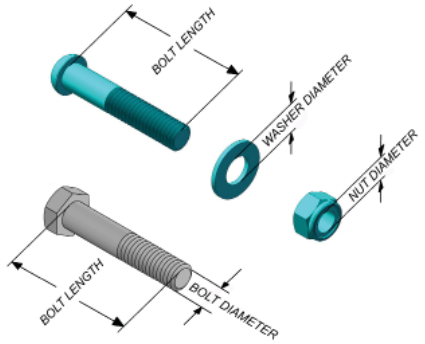

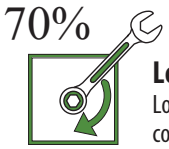

Loosely Fasten
Loosely tighten all hardware in this step. DO NOT fully tighten. Some component(s) may need pre-assembly and or alignment during the assembly process.

Fully Fasten
Wrench tighten all hardware in this step.

Inspection/Maintenance

Perform regular maintenance (see Inspection Label). Pay special attention to areas most susceptible to wear and tear, including but not limited to cables, pulleys and rubber grip. TFI recommends you maintain a service contract with a TFI Authorized Dealer or a Professional Service Company approved by TFI. Keep a service log of all maintenance and repair activities. Extra copies can be downloaded from our website www.tuffstuffitness.com

INSPECTIONS

Recommended Inspection Replace all parts at first signs of wear or damage.	DAILY	WEEKLY	MONTHLY	6-MONTH	YEARLY
INSPECT: Links, pull-pins, snap locks, swivels, connectors, selector pin, and welded-joints.	X				
CLEAN: Upholstery with lanolin-base cleaner. Do not use Windex.	X				
INSPECT: Cables, Belts and tension (adjust if needed).	X				
INSPECT: All labels		X			
INSPECT: All nuts and bolts (tighten if needed).		X			
INSPECT: Accessory bars, handles, rubber grips.		X			
INSPECT: All anti-skid surfaces.		X			
CLEAN & LUBRICATE: Clean guide rods with Super Lube® spray lubricant and lubricate with Super Lube® (PTFE) grease.			X		
LUBRICATE: Seat sleeves, pull-pin sliding mechanism, bushings and linear bearings.			X		
CLEAN & WAX: All powder-coat finishes.				X	
REPLACE: Cables & connecting parts.					X

Use only genuine TuffStuff replacement parts. Failure to do so will void warranty and could result in serious injury or death.

TuffStuff Fitness International
Chino, CA 91710, USA
www.tuffstuffitness.com BNH3137

INSPECTION / MAINTENANCE RECORDS

DATE	REPLACEMENT	REPAIRS	INSPECTED BY

WARRANTY REPAIRS

DATE	REPLACEMENT	REPAIRS	INSPECTED BY

Step 1

Step 1 Assembly List		
Item #	**Description**	**Qty.**
2	**FRONT STABILIZER**	**1**
***3**	**REAR STABILIZER**	**1**
6	PLASTIC HORIZONTAL ELLIPTICAL SHOE	4

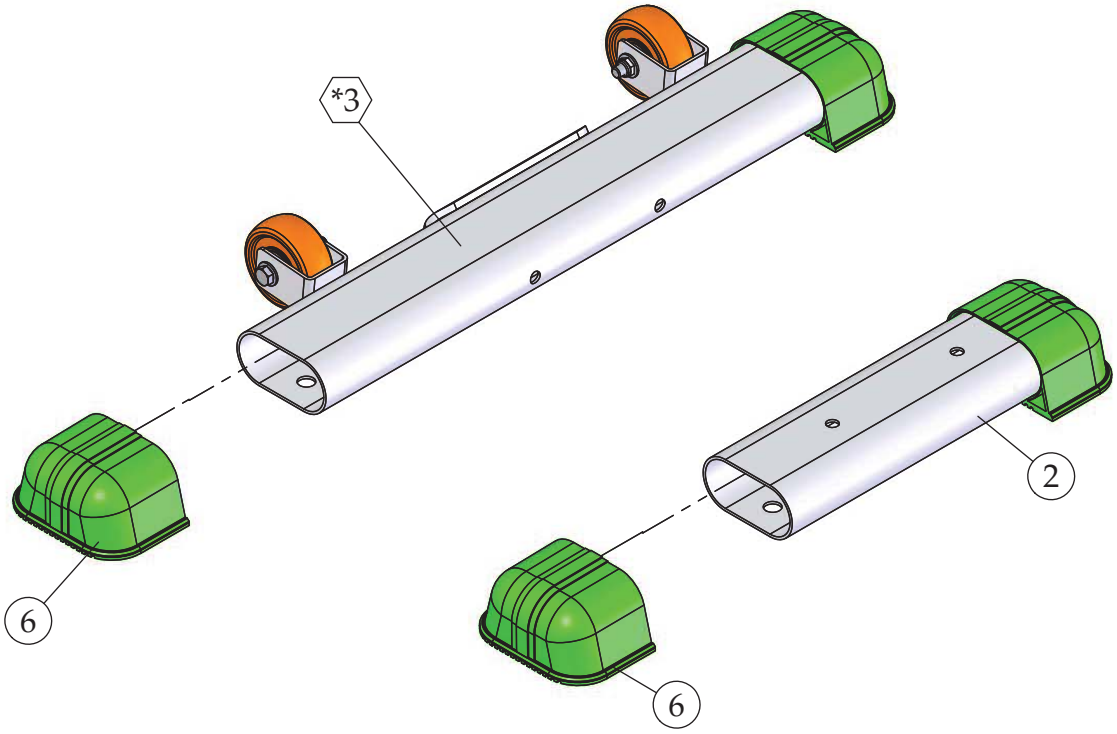

Step 2

Step 2 Assembly List		
Item #	**Description**	**Qty.**
***3**	**REAR STABILIZER**	**1**
10	HEX HEAD CAP SCREW GR-5 Z/P 3/8-16 X 5 1/4	2
12	NYLON INSERT LOCK NUT Z/P 3/8-16	2
13	FLAT WASHER SAE Z/P 3/8”	4
***25**	**MAIN FRAME**	**1**

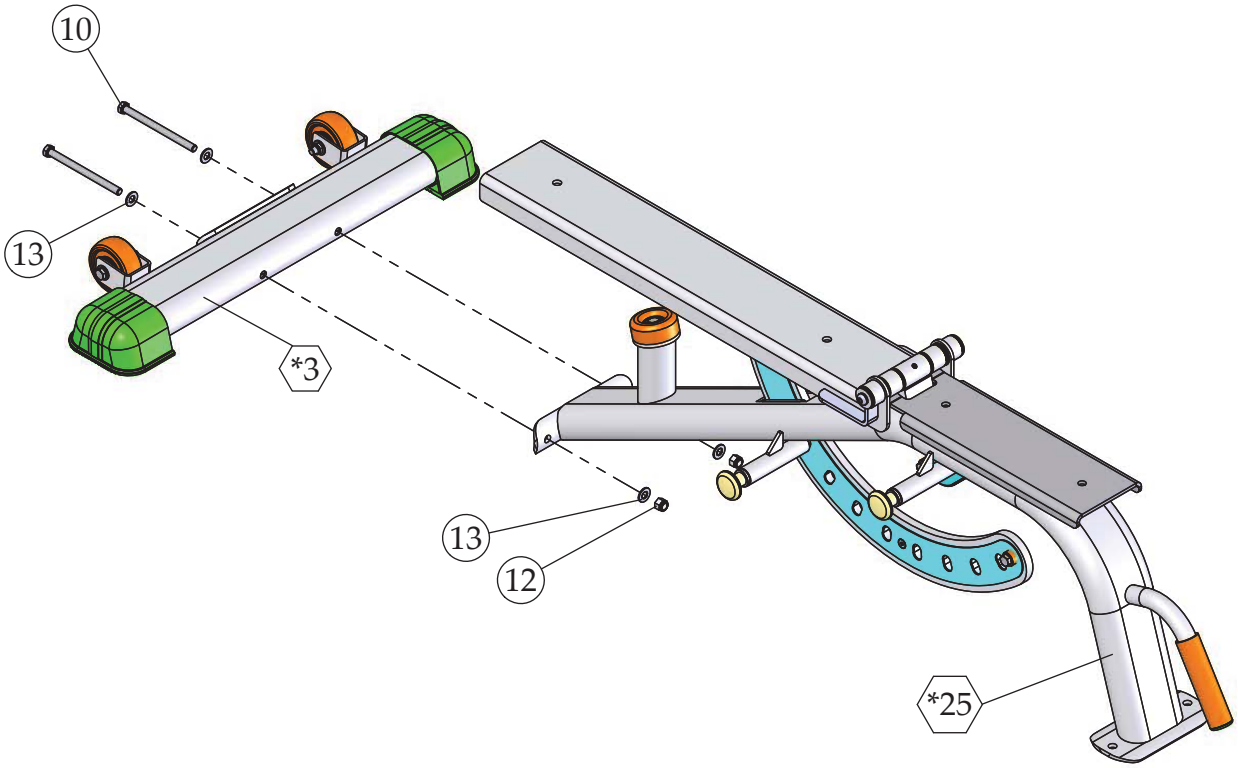

Fully Tighten

100%

Fully Tighten
Wrench tighten all hardware in this step.

Step 3

Step 3 Assembly List		
Item #	**Description**	**Qty.**
2	**FRONT STABILIZER**	**1**
9	HEX HEAD CAP SCREW GR-5 Z/P 3/8-16 X 2 1/4	2
11	NYLON INSERT JAM LOCK NUT Z/P 3/8-16	2
13	FLAT WASHER SAE Z/P 3/8”	2

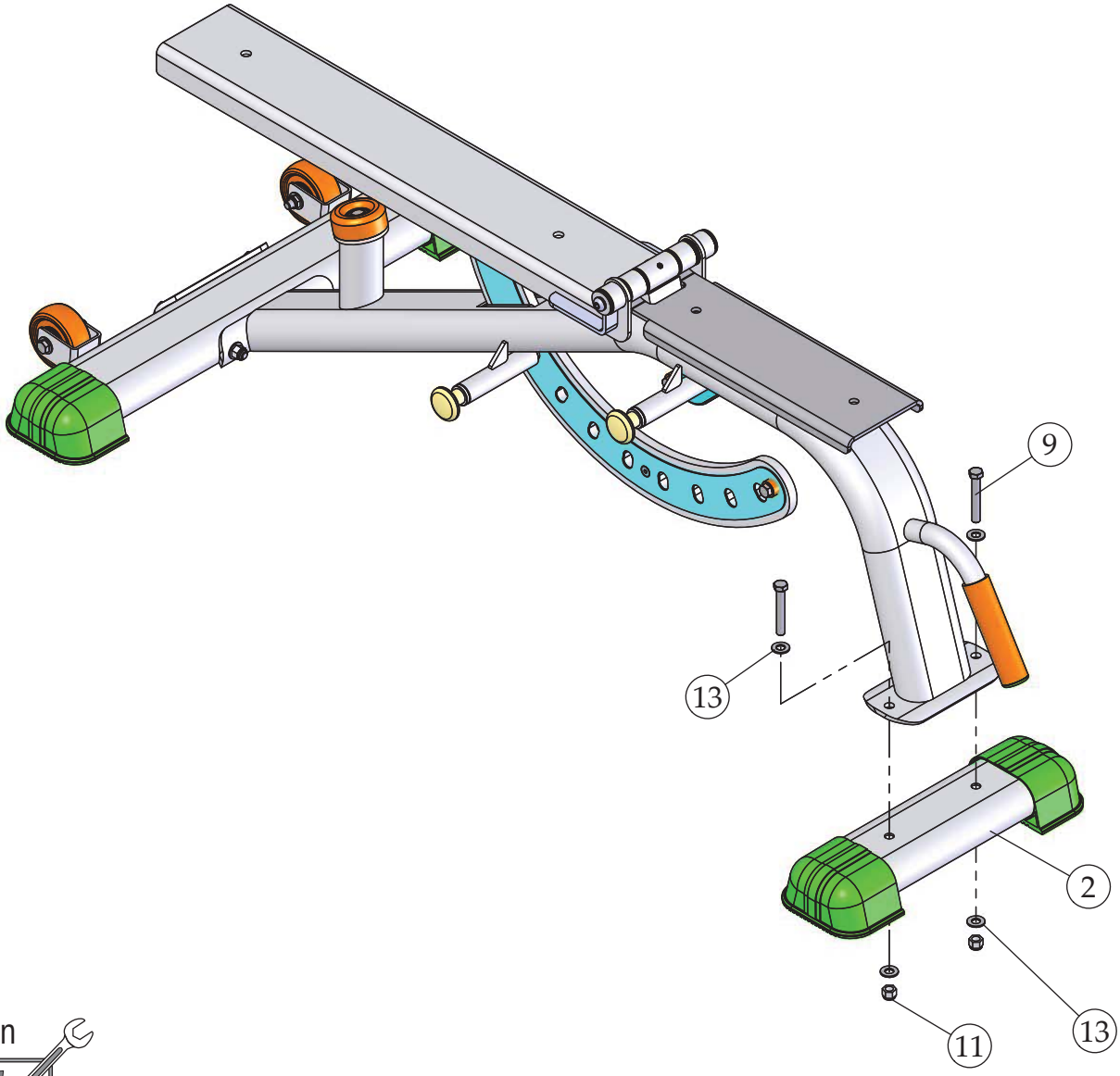

Fully Tighten

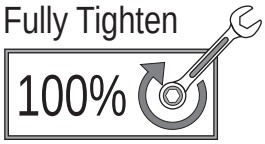

Fully Tighten

Wrench tighten all hardware in this step.

Step 4

Step 4 Assembly List		
Item #	**Description**	**Qty.**
4	**BACK PAD**	**1**
5	SEAT PAD	1
8	HEX HEAD CAP SCREW GR-5 Z/P 3/8-16 X 1 1/4	4
13	FLAT WASHER SAE Z/P 3/8”	4

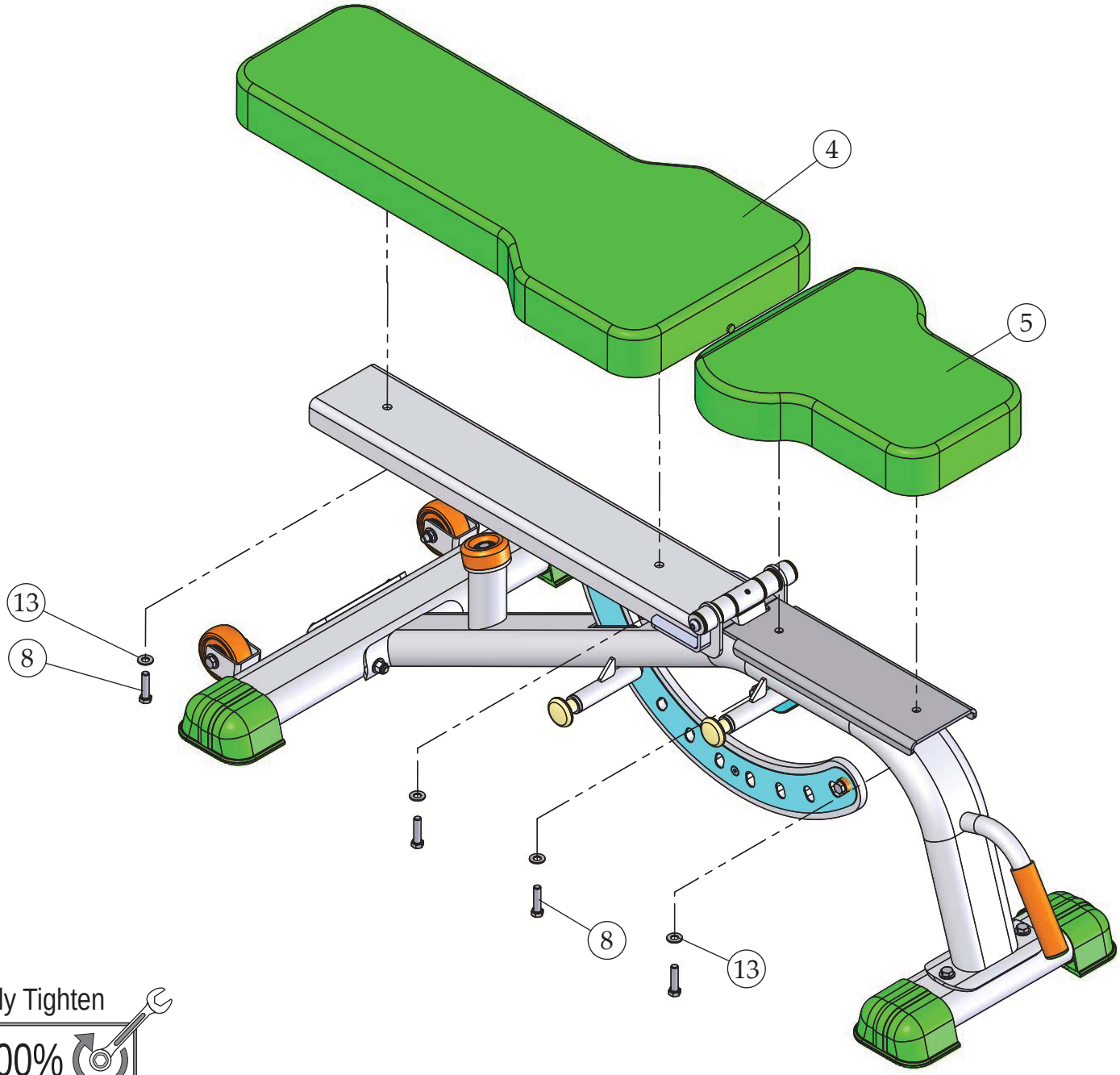

Fully Tighten

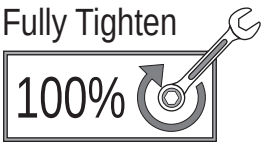

Fully Tighten
Wrench tighten all hardware in this step.

Parts List

COLOR CHART
GRAY= SUB-ASSEMBLY PARTS
BLACK= HARDWARE

CDM-400
Parts List

Item No.	Description	Rev.	Part No.	Qty.	Item No.	Description	Rev.	Part No.	Qty.
1	BACK PAD BRACKET	0	UP8239	1	25	MAIN FRAME	0	UP8237	1
2	FRONT STABILIZER	0	UP8240	1	26	PIVOT AXLE 3/4 X 6 19/32	0	UP8238	1
3	REAR STABILIZER	0	UP8241	1	27	SCRATCH PROTECTOR 2 HOLES	0	UP8244	1
4	BACK PAD	0	UP8242	1	28	SCRATCH PROTECTOR 8 HOLES	0	UP8253	1
5	SEAT PAD	0	UP8243	1	29	SEAT PAD BRACKET	0	UP8254	1
6	PLASTIC HORIZONTAL ELLIPTICAL SHOE		BNH1847	4	30	BLACK NYLON STEM BUTTON		BNH0547	4
7	NYLON SPACER 3/8 X 3/4 X 3/8		BNH0392	1	31	BLACK WHEEL 3/8 X 3 X 1 1/4 W/BEARING		BNH0300	2
8	HEX HEAD CAP SCREW GR-5 Z/P 3/8-16 X 1 1/4		BNH2038	6	32	BRONZE BUSHING W/FLANGE 3/4"		BNH0243	8
9	HEX HEAD CAP SCREW GR-5 Z/P 3/8-16 X 2 1/4		BNH2042	4	33	BUTTON HEAD SOCKET CAP SCREW Z/P 3/8-16 X 1		BNH2033	2
10	HEX HEAD CAP SCREW GR-5 Z/P 3/8-16 X 5 1/4		BNH3680	2	34	FLAT HEAD SOCKET CAP SCREW Z/P 1/4-20 X 1/2		BNH2972	3
11	NYLON INSERT JAM LOCK NUT Z/P 3/8-16		BNH2026	4	35	FENDER WASHER Z/P 3/8 X 1 3/16		BNH3720	2
12	NYLON INSERT LOCK NUT Z/P 3/8-16		BNH3259	2	36	HEX HEAD CAP SCREW GR-5 Z/P 3/8-16 X 1 3/4		BNH2040	1
13	FLAT WASHER SAE Z/P 3/8"		BNH2030	18	37	NYLON SPACER 3/8 X 3/4 X 3/8		BNH0392	1
14	FACILITY SIGN BE ALERT! THE FITNESS EQUIPMENT...		BNH3138	1	38	PLASTIC INSERT CAP 1 1/4" RD 11 GA		BNH0573	2
15	LABEL-WARNING ATTENTION USERS!...		BNH2911	1	39	PULL PIN 1/2 X 5 5/8 STIFF SPRING (YELLOW KNOB)		BNH4075	2
16	LABEL-TFI SERIAL NO. 2.5 X 1.5		BNH3147	1	40	RUBBER BUMPER 3/8 X 2 1/2		BNH0511	1
17	LABEL-CAUTION CHECK PULL-PIN IS FULLY... 1 1/2 X 1 3/8		BNH2912	2	41	RUBBER GRIP 1 ID X .125 X 5		BNH0957	1
18	LABEL-DANGER CHECK RETAINING NUT... 1.5X1		BNH2902	2	42	SOCKET SET SCREW ALLOY 1/4-20 X 1/4		BNH0790	2
19	LABEL-DANGER USE THIS EQUIPMENT ONLY...		BNH2903	1	43	SOCKET SET SCREW Z/P 10-32 X 1/8		BNH2088	2
20	LABEL-INSPECTIONS RECOMMENDED INSPECTION…		BNH3137	1	44	SPLIT LOCK WASHER Z/P 3/8"		BNH2520	2
21	LABEL-SCHEDULE REPLACEMENT PARTS...		BNH3135	1	45	STEEL BUMPER WASHER Z/P 3/8"		BNH0498	1
22	LABEL-WARNING SERIOUS INJURY OR DEATH		BNH3134	1	46	URETHANE BUMPER 1 3/4		BNH0229	1
23	LABEL-WARRANTY LIGHT COMMERCIAL		BNH3136	1	47	HEX HEAD CAP SCREW GR-5 Z/P 3/8-16 X 2 3/8		BNH2043	2
24	TFI EMBLEM 1.88 HIGH X 1.98 WIDE BLUE AND CHROME		BNH4304	1					

PRE ASSEMBLED COMPONENTS

Item No.	Description	Rev.	Part No.	Qty.	Item No.	Description	Rev.	Part No.	Qty.
*2	FRONT STABILIZER	0	UP8240X1	1	*25	MAIN FRAME	0	UP8237X1	1
*3	REAR STABILIZER	0	UP8241X1	1					

Exploded View

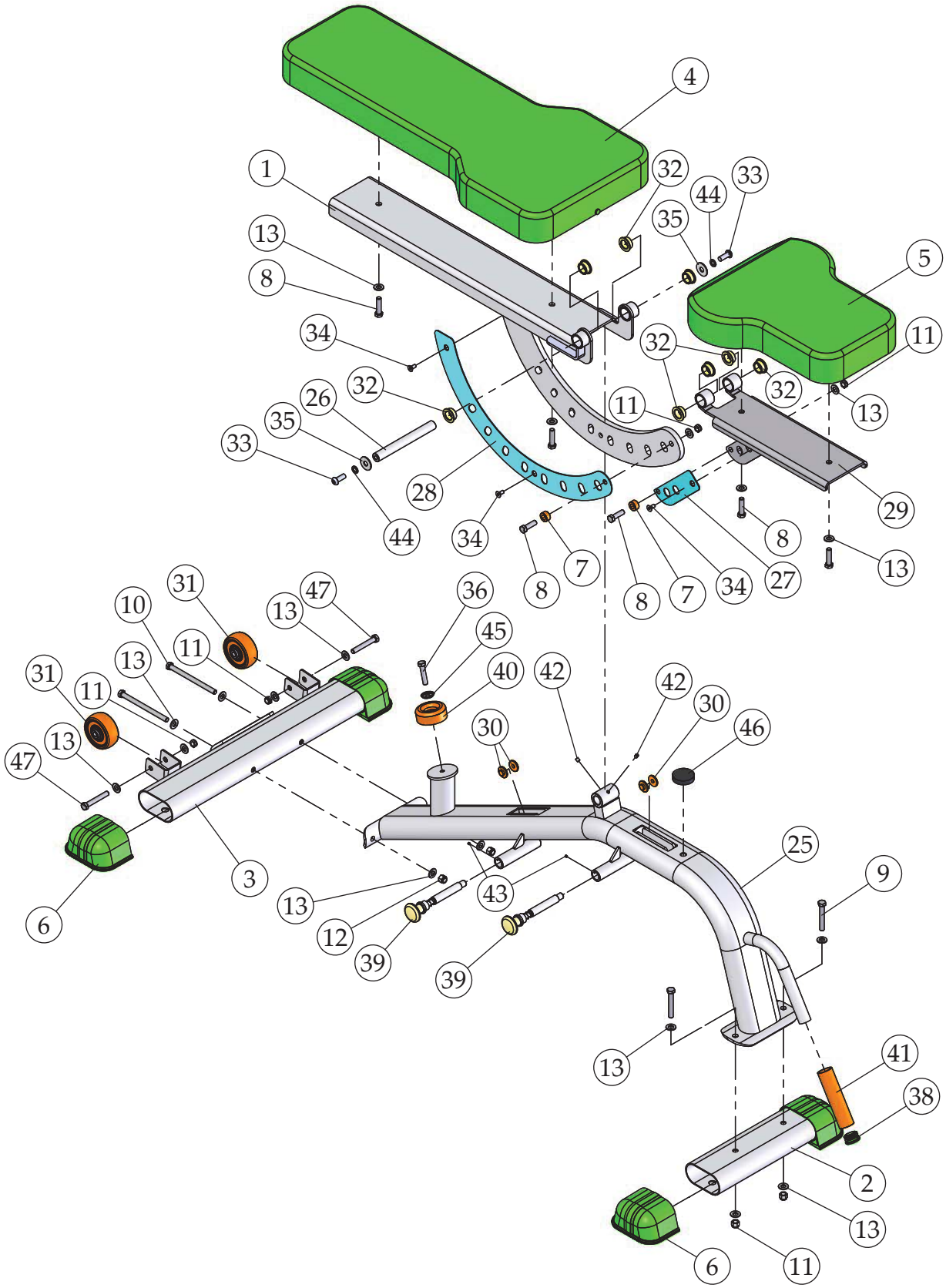

LIGHT COMMERCIAL WARRANTY

This warranty applies only in the United States to the products manufactured or distributed by TuffStuff Fitness International (TFI) under the TuffStuff brand name. TFI warrants to the original purchaser that TuffStuff equipment will be free from defects in material and workmanship. All warranty periods begin to run from the date of purchase to the original purchaser. The warranty and remedies set forth herein are conditioned upon proper storage, installation, use and maintenance and conformance with any recommendations of TFI. This warranty does not cover products not manufactured by TFI or products which are altered without the express written consent of TFI.

LIGHT COMMERCIAL WARRANTY:

TEN (10) Years: Structural main frames, welds, cams and weight plates.

FIVE (5) Years: Pivot bearings, pulleys, bushings, guide rods and gas shocks.

ONE (1) Year: Belts, linear bearings and pull-pin components.

All other parts not mentioned elsewhere in the warranty will expire one (1) year from the date of purchase to the original purchaser.

SIX (6) Months: Upholstery, cables, finish and rubber grips.

Light Commercial Use:
Light Commercial Warranty applies to facilities like hotels, apartment complexes, personal training studios, fire & police stations, etc. where the equipment would be used by no more than 30 people per day.

HOME LIFETIME WARRANTY:

LIFETIME of the equipment while owned by the original purchaser (applies only to defects from manufacturer only).

This warranty does not cover:

1. TuffStuff products sold for and used in a commercial or institutional environment.
2. Any damage, failure or loss caused by accident, misuse, neglect, abuse, improper assembly, improper maintenance, or failure to follow instructions or warnings in the owner's manual and warning labels posted on the machines.
3. Use of the product in a manner for which it was not designed.
4. Original product that is altered, or the use of replacement parts and components of another manufacturer other than TuffStuff.

The obligation of TFI under this warranty is limited to repairing or replacing warranted defective parts as TFI may elect, at TFI's facility in Chino, California, without charge to the purchaser. Purchaser is responsible for installation of repaired or replaced parts, and all transportation and insurance costs on returned or replaced equipment to and from TFI's facility in Chino.

THE FOREGOING SHALL CONSTITUTE THE SOLE REMEDY OF THE PURCHASER AND THE SOLE LIABILITY OF TFI WITH REGARD TO WARRANTY. NO IMPLIED STATUTORY WARRANTY OR IMPLIED STATUTORY WARRANTY OF MERCHANTABILITY OR FITNESS FOR A PARTICULAR PURPOSE SHALL APPLY. IN NO EVENT, WHETHER AS A RESULT OF BREACH OF CONTRACT, WARRANTY, NEGLIGENCE OR OTHERWISE, SHALL TFI BE LIABLE FOR SPECIAL, INCIDENTAL OR CONSEQUENTIAL DAMAGES INCLUDING, BUT NOT LIMITED TO, LOSS OF PROFITS OR REVENUE, LOSS OF USE OF EQUIPMENT, COST OF CAPITAL, COST OF SUBSTITUTION EQUIPMENT, DOWNTIME COST, OR CLAIMS OF CUSTOMERS OR PURCHASER FROM SUCH DAMAGE.

This written warranty is the final, complete and exclusive agreement of the parties with respect to the quality or performance of the equipment and no action for breach of this written warranty or any implied warranty shall be commenced more than one (1) year after the accrual of the cause of action. No modification of this warranty or waiver of its terms shall be binding on either party unless approved in writing by an authorized representative of the party. Contact TuffStuff Fitness International at 13971 Norton Avenue, Chino, CA 91710, before returning any defective equipment.

This warranty gives you specific legal rights and you may also have other rights, which may vary from state to state.

SERIAL # _____

Write your Serial number here for future reference

_____

Purchase Date

TuffStuff Fitness International, Inc.
13971 Norton Avenue, Chino, CA 91710, USA Phone: 909-629-1600 Fax: 909-629-4967
www.tuffstuffitness.com service@tuffstuff.net or service1@tuffstuff.net