TUFFSTUFF FITNESS INTERNATIONAL

OWNER'S MANUAL

Maintenance & Assembly Instructions

IMPORTANT: KEEP THIS MANUAL FOR FUTURE REFERENCE

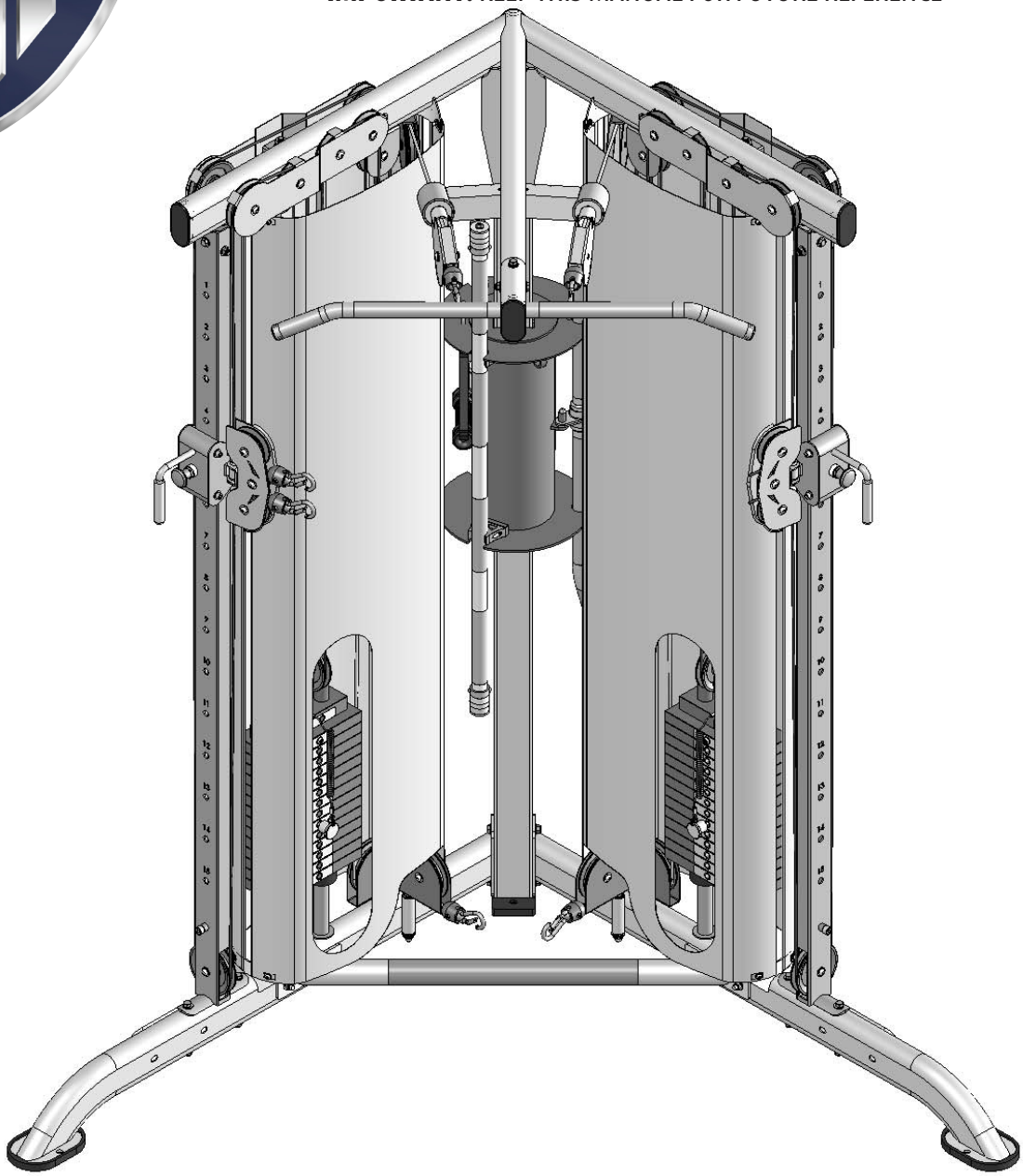

NOTICE

It is the Purchaser's/Owner's obligation:

1. To disclose and post all Rules & Regulations, Danger, Warning and Caution labels affixed on the machine to their customers/users.
2. Equipment to be installed by TFI Authorized Dealer or a service company approved by TFI.
3. Provide trained personnel, supervision and correct usage of the equipment.
4. Provide scheduled inspection, maintenance & repairs and must be performed by TFI Authorized Dealer or a service company approved by TFI.
5. Must use only genuine TFI replacement parts.
6. ⚠ **WARNING** Machine must be anchored to a solid and level surface.

CXT-200

Corner Multi-Functional Trainer

CXT-200_Rev2
Revision Date 2-18-2019

Table of Contents

OVERHEAD SPECIFICATIONS ..... Page 3
DANGER, WARNING, & CAUTION LABELS INFORMATION ..... Page 4-7
ANCHORING UNIT ..... Page 8
IMPORTANT SAFETY INSTRUCTIONS ..... Page 9
REGISTRATION, SERVICE & ASSEMBLY ..... Page 10
INSPECTION/MAINTENANCE ..... Page 11
CABLE INSPECTION ..... Page 12
STEP 1 ..... Page 13
STEP 2 ..... Page 14
STEP 3 ..... Page 15
STEP 4 ..... Page 16
STEP 5 ..... Page 17
STEP 6 ..... Page 18
STEP 7 HI/LOW CABLE ROUTING ..... Page 19-20
STEP 8 HI/LOW CABLE ROUTING ..... Page 21-22
STEP 9 LAT/LOW ROW CABLE ROUTING ..... Page 23
STEP 10 LAT/LOW ROW CABLE ROUTING ..... Page 24
STEP 11 ANTI-TWIST CABLE ..... Page 25
STEP 12 ..... Page 26
PARTS LIST ..... Page 27-28
EXPLODED VIEW ..... Page 29
200 LBS WEIGHT STACK OPTION ..... Page 30
BASIC EXERCISE GUIDE ..... Page 31-36
SAFETY PRECAUTIONS (For CXT-225 option) ..... Page 37-38
WARRANTY ..... Page 39

TuffStuff Fitness International Inc. continually engages in research related to product improvements. Please take the time to carefully read through this owner's manual thoroughly. Instructions contained in this owner's manual are not intended to cover all details or variations possible with equipment, or to cover every contingency that may be met in conjunction with assembly, installation, operation, maintenance or troubleshooting of the equipment. Even though we have prepared this owner's manual with extreme care, neither the manufacturer nor the author can accept responsibility for any errors in, or omission from, the information given. Should additional information be required, or should situations arise that are not covered by this owner's manual, the matter should be directed to Customer Service at TuffStuff Fitness International Inc. in Chino, California.

OVERHEAD SPECIFICATIONS

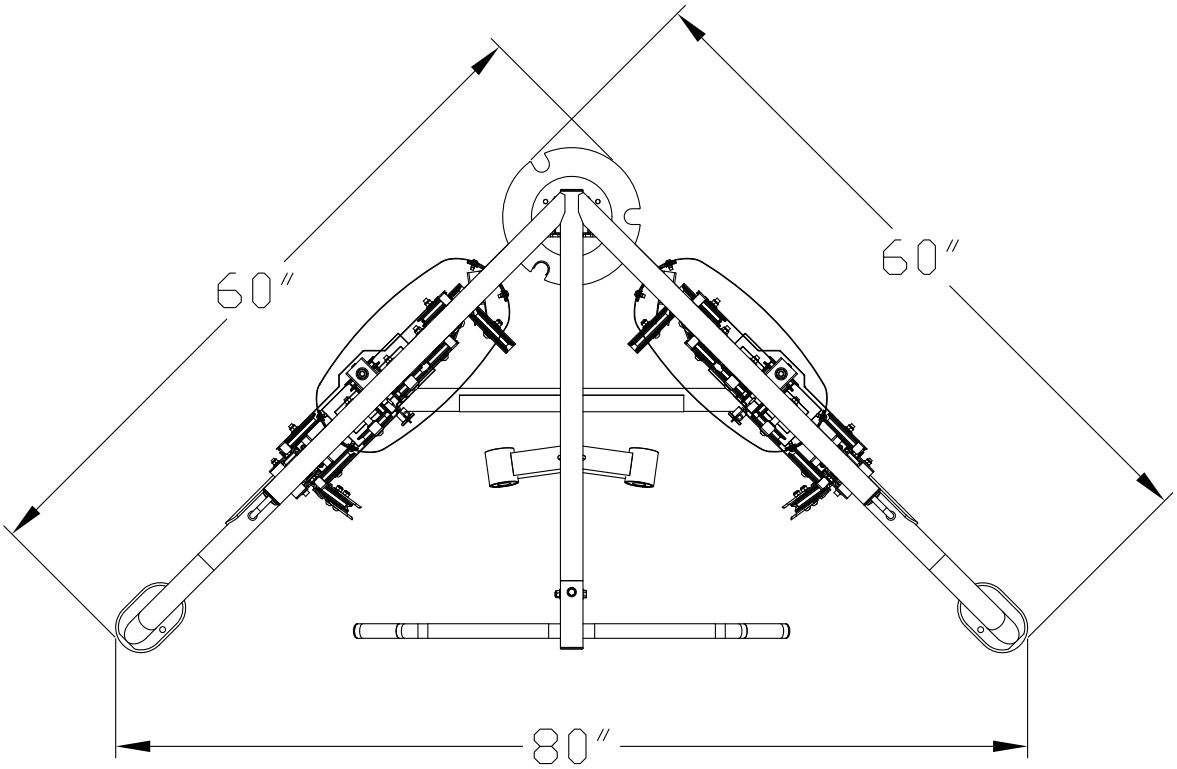

L 60″ X W 60″ X H 84″
PRODUCT WEIGHT 645 lbs
MAX-LOAD WEIGHT LIMIT - 400 lbs

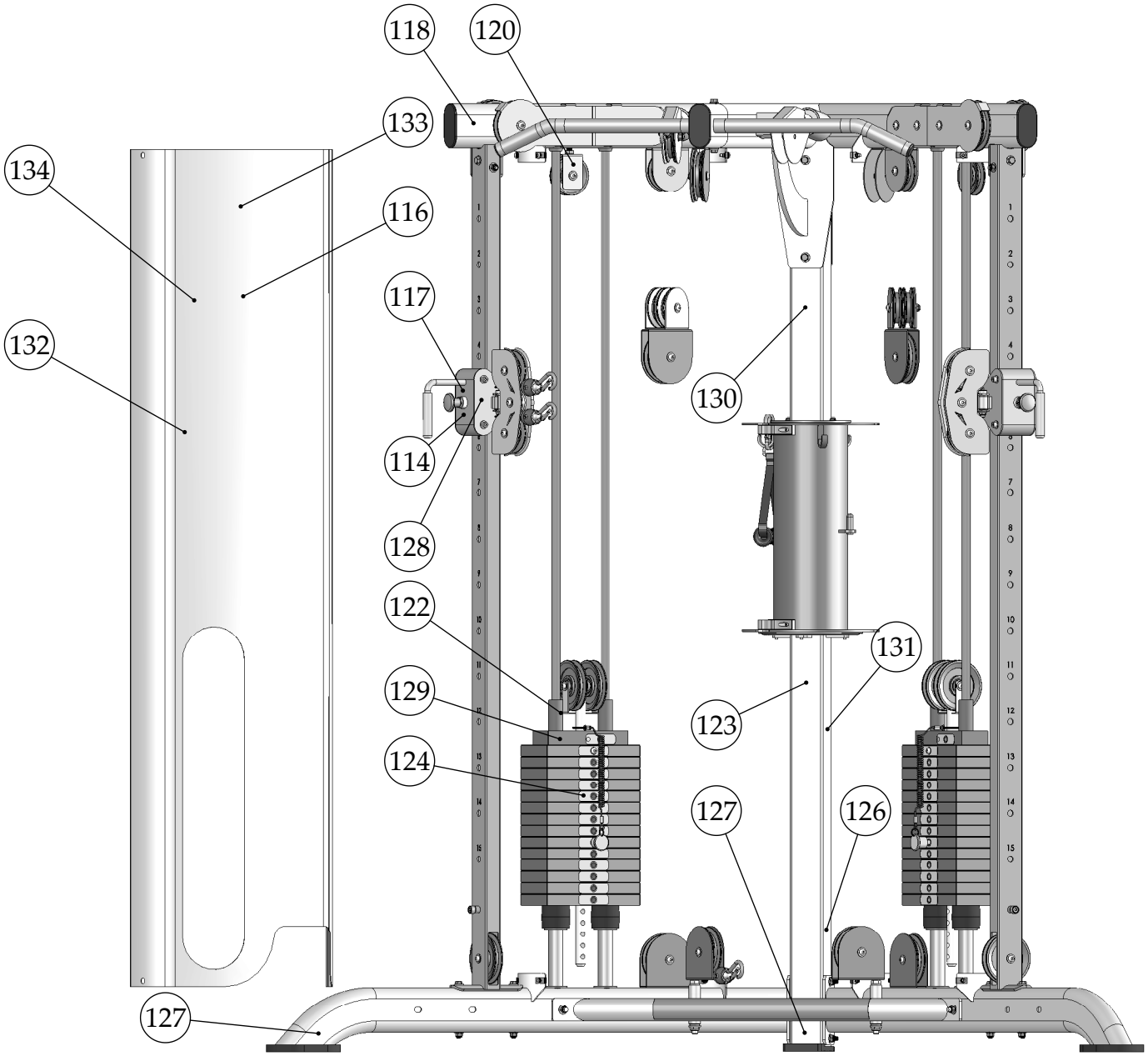
118
120
133
134
116
117
132
130
114
128
122
131
129
123
124
127
126
127

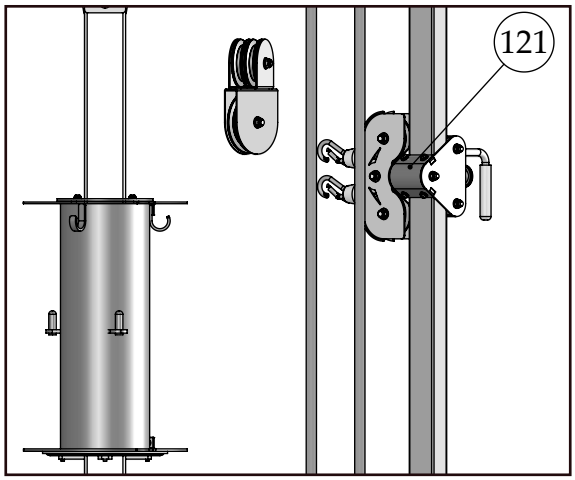
121

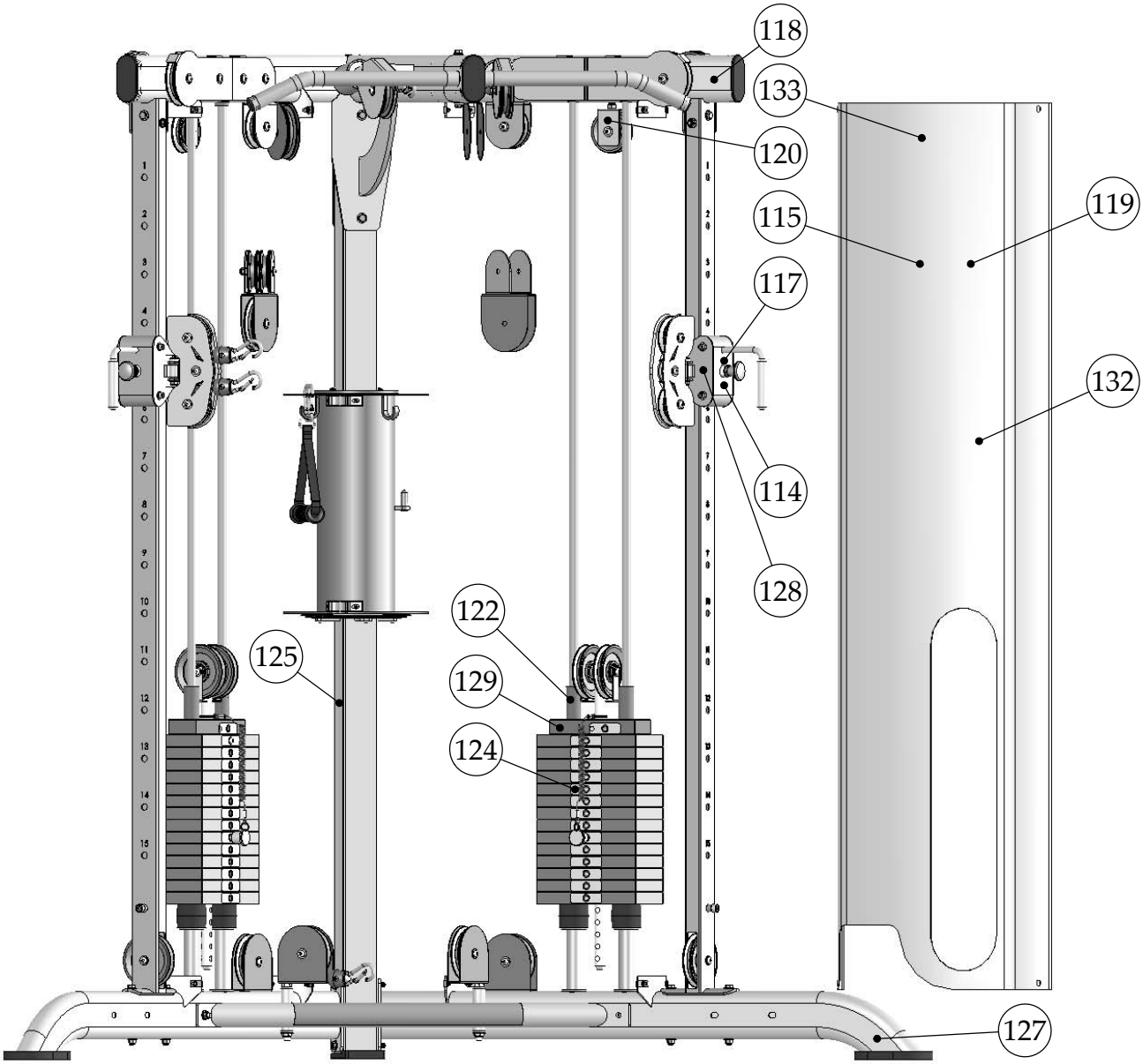
118
133
120
119
115
117
132
114
128
122
125
129
124
127

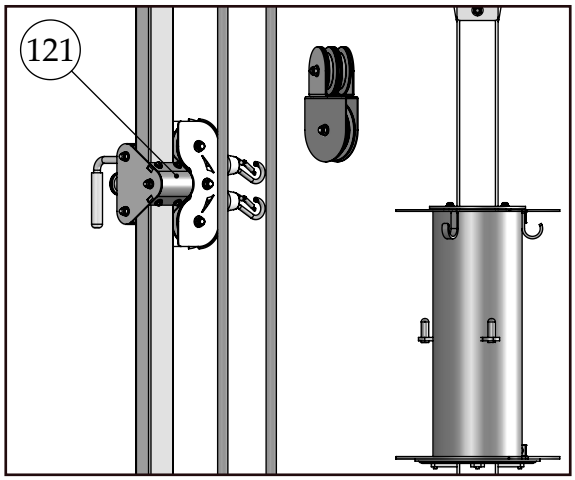
121

Carefully read ALL Danger, Warning & Caution labels posted on the machine

117

DANGER

TIGHTEN this retaining nut before use.

BNH3146

119

DANGER

Use this equipment ONLY for its intended purpose.

If you are unfamiliar with the equipment or procedure, refer to your Owner's Manual or call TuffStuff at 888-884-8275.

Failure to comply could result in serious injury or death.

BNH2903

114

CAUTION

CHECK

Pull-pin is fully engaged in the hole before use.

BNH2912

130

WARNING

Serious injury or death can occur if these rules and precautions are not observed:

1. **Read and Understand** Owner's Manual and all DANGER, WARNING and CAUTION labels before using this equipment. If you still need help, seek assistance from floor personnel.
2. Obtain a **medical exam** before beginning any exercise program.
3. **Stop exercising** if you feel faint or dizzy. Consult a physician if you are experiencing pain.
4. **Inspect equipment** prior to use for wear and tear, loose fittings, worn or frayed cables/belts and frame welds. Do not use if it appears damaged or inoperable.
5. **Do not attempt to fix** or free any jammed parts by yourself. Seek assistance from floor personnel.
6. **Use this equipment only for the intended use** and for exercise(s) shown in the exercise label.
7. Keep body, clothing and hair **clear from all moving parts.**
8. **Children must not be allowed** near this machine. Teenager must be supervised.
9. **Make sure the selector pin** is completely inserted. Use only the selector pin provided by the manufacturer. If difficulty inserting the pin, seek assistance from floor personnel.
10. **Never pin the weights in an elevated position.** Do not use the machine if found in this condition. Inform floor personnel immediately.
11. **Do not modify selectorized weight stack** with any add-on incremental weights or dumbbells, except those with standard factory installed.
12. **Do not remove labels** affixed to the machine. Replace if damaged.

TuffStuff Fitness International
Chino, CA 91710, USA

BNH3134

131

WARRANTY

LIGHT COMMERCIAL

TEN (10) YEARS:
- Structural main frames, welds, cams and weight plates

FIVE (5) YEARS:
- Pivot bearings, pulleys, bushings, gas shocks and guide rods

ONE (1) YEAR:
- Cables, linear bearings and pull-pin components

SIX (6) MONTHS:
- Upholstery, finish and rubber grips

ALL OTHER PARTS not mentioned, one year from the date of purchase to the original purchaser.

Light Commercial Use:
Light Commercial warranty applies only to facilities like hotels, apartment complexes, personal training studios, fire & police stations, etc. where the equipment would be used by no more than 30 people per day.

Refer to the Owner's Manual for details, assembly & maintenance requirements, review and understand all danger, warning and caution labels.

All warranty periods begin to run from the date of delivery to the original purchaser. The obligation of TuffStuff under this warranty is limited to repairing or replacing warranted defective parts, as TuffStuff may elect, at TuffStuff's facility in Chino, California, without charge to the Purchaser for either parts or labor. Purchaser is responsible for installation of repaired or replaced parts, and all transportation and insurance costs to and from TuffStuff's facility in Chino. For a detailed copy of the warranty, please contact:

TuffStuff Fitness International Inc.
Chino, CA 91710, USA
www.tuffstuffitness.com

BNH3229

127

WARNING

Machine must be bolted down at all anchoring points.

BNH4416

123

INSPECTIONS

Recommended Inspection Replace all parts at first signs of wear or damage.	DAILY	WEEKLY	MONTHLY	6-MONTH	YEARLY
INSPECT: Links, pull-pins, snap locks, swivels, connectors, selector pin, and welded-joints.	X				
CLEAN: Upholstery with lanolin-base cleaner. Do not use Windex.	X				
INSPECT: Cables, Belts and tension (adjust if needed).	X				
INSPECT: All labels		X			
INSPECT: All nuts and bolts (tighten if needed).		X			
INSPECT: Accessory bars, handles, rubber grips.		X			
INSPECT: All anti-skid surfaces.		X			
CLEAN & LUBRICATE: Clean guide rods with Super Lube® spray lubricant and lubricate with Super Lube® (PTFE) grease.			X		
LUBRICATE: Seat sleeves, pull-pin sliding mechanism, bushings and linear bearings.			X		
CLEAN & WAX: All powder-coat finishes.				X	
REPLACE: Cables & connecting parts.					X

Use only genuine TuffStuff replacement parts. Failure to do so will void warranty and could result in serious injury or death.

TuffStuff Fitness International
Chino, CA 91710, USA
www.tuffstuffitness.com BNH3137

129

WARNING

Keep body, hands and fingers clear of all moving parts.

BNH2926

126

TUFFSTUFF FITNESS INTERNATIONAL
www.tuffstuffitness.com
TEL: 909-629-1600 | 888-884-8275 (USA ONLY)
EN NORM 20957 CLASS: "S"
MAXIMUM USER WEIGHT: 155 kg
MODEL
SERIAL #
BNH 5186

122

IMPORTANT

For smooth performance, clean guide rods with Super Lube® spray lubricant and lubricate with Super Lube® (PTFE) grease.

BNH2925

118

DANGER

DO NOT lean against or pull on the framework, weight stack or any component at all times.

Inappropriate or improper use can cause the machine to tip over, and could result in serious injury or death.

BNH3145

120

IMPORTANT

ADJUST

Cable Tension Here

BNH2924

128

WARNING

Keep body, hands and fingers clear of all moving parts

BNH2908

133

121

IMPORTANT

For smooth performance, lubricate all gliding surfaces with silicone spray lubricant.

BNH2916

Carefully read ALL Danger, Warning & Caution labels posted on the machine

125

SCHEDULE
Replacement Parts

Recommended TuffStuff Parts (replace or as needed)	9-MONTH	12-MONTH	15-MONTH	18-MONTH
Upholstery	X			
Foam Rolls	X			
Cables		X		
Rubber Grips		X		
Nylon Handles			X	
Pull-Pins			X	
Plastic Guides			X	
Weight Selector Pin			X	
Abdominal Strap			X	
Adj. Release Handle				X
Black Caster Wheels				X
Buckle Seat/Belt				X
Labels (as needed)				

Use only TuffStuff replacement parts when servicing. Failure to do so will void warranty on product and could result in personal injury.

TuffStuff Fitness International
13971 Norton Avenue
Chino, CA 91710

BNH3135

132

ATTENTION USERS

Resistance ratio at the handle:

1/4 RESISTANCE — Single hook up

1/2 RESISTANCE — Dual hook up

IMPORTANT NOTE:
Single cable usage (1/4 resistance):

When performing "LOW" pulley exercises, use top hook (A).

When performing "HIGH" pulley exercises, use bottom hook (B).

A
B

TuffStuff Fitness International Inc.
Chino, CA 91710, USA
www.tuffstuffitness.com

BNH3150

134

DANGER

Bar Catch
Safety Stopper

SECURE BAR CATCH
Make sure it is fully engaged while in use or after use.

SAFETY STOPPER
Must be placed in the top position (as shown).

Failure to do so could cause the bar to drop and results in serious injury or death.

124

TOP PLATE 10 lbs.	TOP PLATE 4.5 kgs.
20 lbs.	9.1 kgs.
30 lbs.	13.6 kgs.
40 lbs.	18.1 kgs.
50 lbs.	22.7 kgs.
60 lbs.	27.2 kgs.
70 lbs.	31.8 kgs.
80 lbs.	36.3 kgs.
90 lbs.	40.8 kgs.
100 lbs.	45.4 kgs.
110 lbs.	49.9 kgs.
120 lbs.	54.4 kgs.
130 lbs.	59.0 kgs.
140 lbs.	63.5 kgs.
150 lbs.	68.0 kgs.
160 lbs.	72.6 kgs.
170 lbs.	77.1 kgs.
180 lbs.	81.6 kgs.
190 lbs.	86.2 kgs.
200 lbs.	90.7 kgs.

10–150 Lbs. FOR STANDARD WEIGHT STACK.

160–200 Lbs. FOR OPTIONAL 200 Lbs. WEIGHT STACK.

115

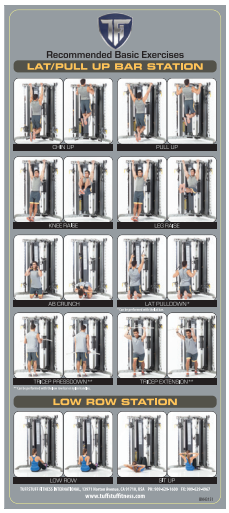

116

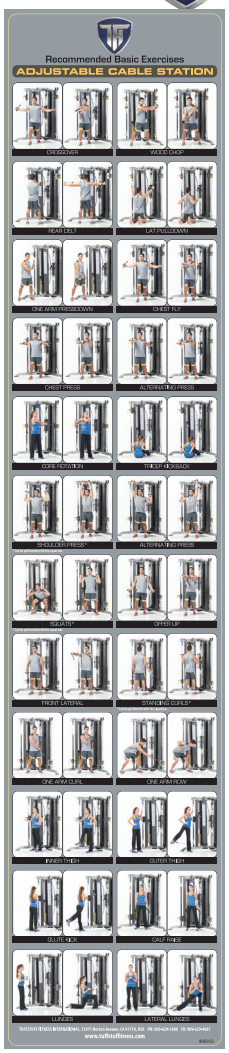

113

BE ALERT!

THE FITNESS EQUIPMENT IN THIS FACILITY PRESENTS HAZARDS WHICH, IF NOT AVOIDED, COULD CAUSE SERIOUS INJURY OR DEATH.

Prior to using the equipment, READ the warning labels and instruction placards affixed to each machine.

If you are unsure on how to use a machine, seek the assistance of our floor personnel. We will be happy to instruct you on how to use the equipment properly.

Immediately report any piece of equipment that is not functioning properly to our floor personnel so that it may be evaluated and service promptly.

DO NOT ATTEMPT to use or fix any piece of equipment that is not functioning properly.

ASTM F1749-96 TUFFSTUFF FITNESS INTERNATIONAL, CHINO, CA 91710

BNH3138

It is extremely important that the **Facility Sign** shown to the left be installed in plain view of the unit.

You should have received it along with this Owner's Manual. If you did not receive this Facility Sign with your order, you can obtain one at no cost to you from TuffStuff Fitness by contacting our service department at:

1 (888) 884-8275
service@tuffstuff.net
service1@tuffstuff.net

Anchoring Unit

Holes on shoe plates are provided for anchoring the unit to the floor.
(See anchoring hole locations below)

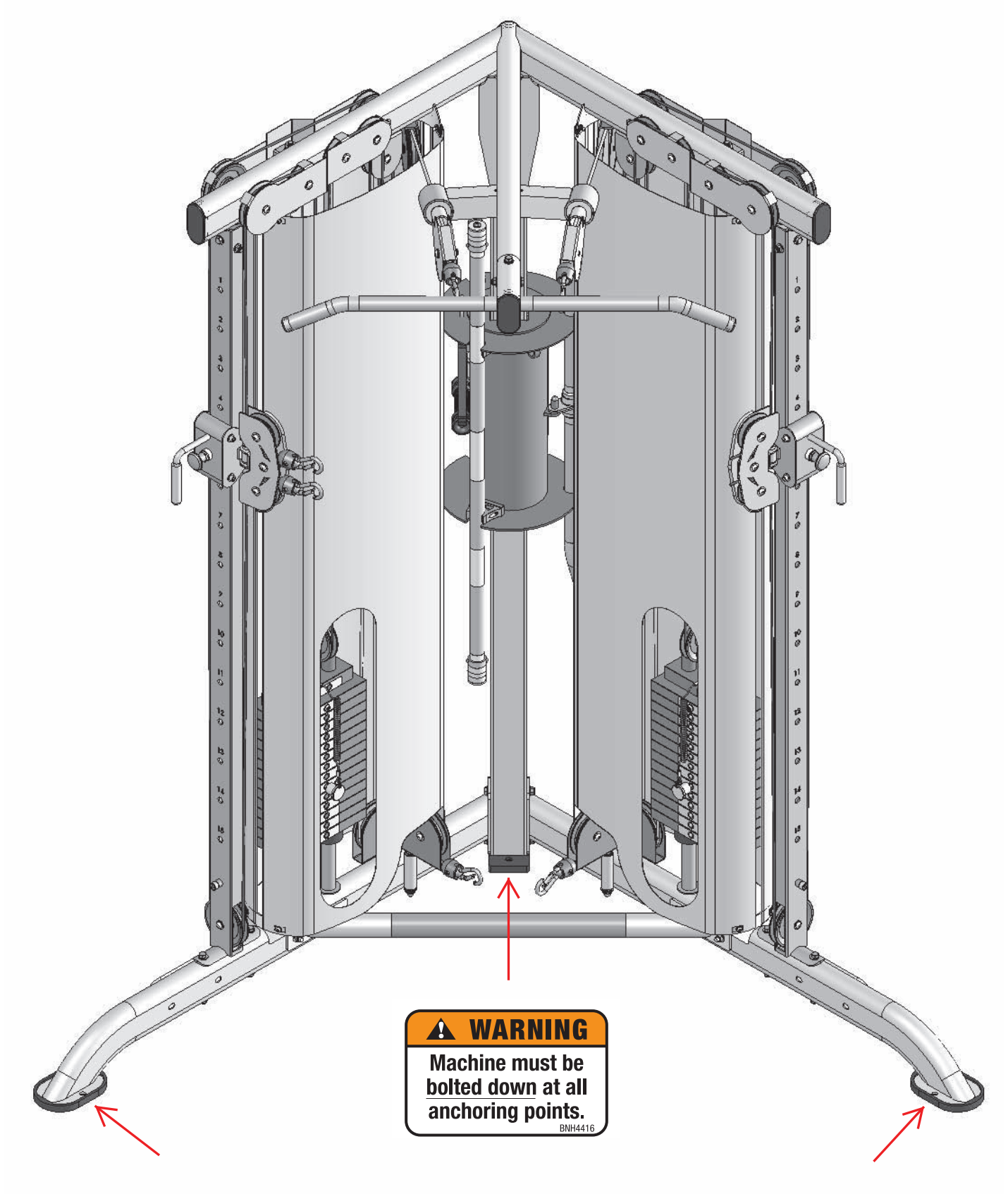

Important Safety Instructions

It is the responsibility of the facility owner and/or owner of the equipment to review the Owner's Manual with their facility personnel and understand all Danger, Warning and Caution labels affixed on the machine. It is the responsibility of the floor personnel to instruct users on proper operation of the equipment and review all danger, warning and caution labels.

⚠ WARNING SERIOUS INJURY OR DEATH CAN OCCUR IF THESE SAFETY PRECAUTIONS ARE NOT OBSERVED:

1. Obtain a medical exam before beginning any exercise program.
2. Read and understand Owner's Manual and all **Danger, Warning and Caution** labels before using this equipment. If you still need help, seek assistance from floor personnel.
3. **Inspect the equipment** before each use for wear and tear, loose fittings, worn or frayed cables and frame welds. DO NOT USE if it appears to be inoperable or damaged.
4. Stop exercising if you feel faint or dizzy. Consult a physician if you are experiencing pain.
5. **Use this equipment only for the intended use and for exercise(s) shown on page 30-34.**
6. Keep body, clothing and hair clear from all moving parts. Do not attempt to free any jammed parts by yourself.
7. Always warm-up before and cool-down after weight training. Warm-up for 10-15 minutes with stretching and cardiovascular exercises. Cool-down should include light stretching exercises for 5-15 minutes.
8. Never hold your breath – will limit the flow of oxygen to your brain and may cause dizziness. The most often used breathing pattern is inhaling during least resistance and exhaling during maximum resistance.
9. Do not use accessories or accessory attachments that are not recommended by TFI.
10. Make sure selector pin is completely inserted. Use only the selector pin provided by the manufacturer.
11. Never pin the weights in an elevated position. Do not use the machine if found in this condition.

Facility Safety Guidelines and Practices

1. Read and understand the Owner's Manual before assembling, servicing or using the equipment.
2. Equipment to be installed by TFI Authorized Dealer or Professional Service Company approved by TFI.
3. Make sure each machine is set up and operated on a solid level surface. Do not install equipment on an uneven surface.
4. **Anchoring of equipment must be completed** at time of installation and inspected prior to use. Failure to anchor the machine to the floor could cause the machine to tip or fall over due to incorrect usage and misuse, and could result in serious injury or death.
5. Provide an adequate safety perimeter between the machine, walls and other equipment to ensure that the facility has proper clearance for usage and training.
6. Post and disclose all safety, rules and regulations on a bulletin board easily accessible to users.
7. Perform regular maintenance (see Inspection Label). Pay special attention to areas most susceptible to wear and tear, including but not limited to cables, pulleys and rubber grips.
8. **Do not** lean against or pull on the framework, weight stack or any component at all times.
9. **Children must not** be allowed near the equipment. Teenager must be supervised.
10. Replace immediately all parts at first sign of wear or damage. If unable to replace worn or damaged components/parts, remove machine from service until the repair is made.
11. Use only genuine TuffStuff replacement parts. Failure to do so will void warranty and could result in serious injury or death to the users.
12. **Do not remove** any decals affixed to the machine. Replace if damaged.
13. **Do not alter or modify** the original manufacturer's weight stack with any add-on incremental weights, weight plates or dumbbells except those with standard factory installed option.
14. Maintain a service contract with a TFI Authorized Dealer or a Professional Service Company approved by TFI. Keep a service log of all maintenance and repair activities. NOTICE: It is the sole responsibility of the owner or facility operator to ensure that regular maintenance is performed.

⚠ DANGER

DANGER: indicates an imminently hazardous situation which, if not avoided, will result in death or serious injury.

⚠ WARNING

WARNING: indicates a potentially hazardous situation which, if not avoided, will result in death or serious injury.

⚠ CAUTION

CAUTION: indicates a hazardous situation which, if not avoided, could result in minor or moderate injury.

Registration, Service & Assembly

Thank you for purchasing the CXT-200 Corner Multi-Functional Trainer. This machine is part of the TuffStuff line of quality strength training equipment. To maximize your use of the equipment, please study the Owner's Manual thoroughly.

Registration

To avoid unnecessary delays on warranty parts and to insure that a permanent record of your purchase is on file with our company, be sure to register online at http://www.tuffstuffitness.com or mail to address shown below within 10 days of purchase.

Obtaining Service

Please use this Owner's Manual as your guide to all parts included in your shipment. When ordering parts, you must specify the part number and description from this owner's manual. **Use only genuine TuffStuff replacement parts when servicing the equipment.** Failure to do so will void warranty and could result in serious injury or death.

For information about product operation or service:

Phone:	909-629-1600 Toll Free 888-884-8275
Fax:	909-629-4967
E-mail:	service@tuffstuff.net or service1@tuffstuff.net
Hours:	M–F 8:00 – 4:30 PST
Or write to:	TuffStuff Fitness International Inc. Customer Service 13971 Norton Avenue, Chino, CA 91710

Retain this Owner's Manual for future reference when ordering service or parts. To assist you better, please be prepared to provide the following information:

1. Model Number **2. Place of Purchase**
3. Serial Number **4. Part # and Description**

Required Tools

The basic tools that you will need to assemble the CXT-200 but are not limited to:

- 9/16", 3/4", 1/2" combination wrenches
- Adjustable wrench
- Ratchet wrench with 9/16", 3/4", 1/2" sockets
- External retaining ring pliers
- Rubber mallet, measuring tape & utility knife
- Super Lube® spray lubricant and grease
- Windex or household glass cleaner

Assembly Requirements

Follow these installation requirements when assembling the CXT-200. Use the overhead view on the Content Page to layout your floor plan before assembling.

Set up the CXT-200 on a clean, solid, flat surface. A smooth, flat surface under the machine helps keep it level.

Allow ample space around the machine for safe unrestricted use and easier access.

Insert all bolts in the same direction. For aesthetic appearance, insert all bolts in the same direction unless specified (in text or illustration) to do otherwise.

Leave room for adjustments. Do not fully tighten fasteners until instructed in the assembly steps to do so (to prevent any difficulty with alignment of parts during the assembly process). When not instructed, tighten fasteners such as bolts, nuts and screws so the unit is stable, but leave room for adjustments.

Assembly Tips

Read all "Notes" on each page before beginning each step.

While you may be able to assemble the CXT-200 using the illustrations only, IMPORTANT safety notes and other tips are included in the text.

Some pieces may have extra holes that you will not use. Use only those holes indicated in the instructions and illustration.

NOTE: With so many assembled parts, proper alignment and adjustment is critical. While tightening the nuts and bolts, be sure to leave room for final adjustments.

CAUTION: Obtain assistance from TFI if you have difficulty assembling the CXT-200. Please do not attempt to complete the assembly as this could result in equipment failure and serious injuries to the users.

Symbols & Description

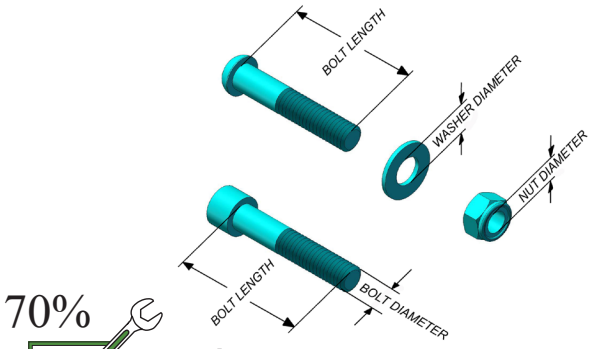

70%

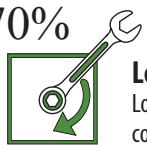

Loosely Fasten
Loosely tighten all hardware in this step. DO NOT fully tighten. Some component(s) may need pre-assembly and or alignment during the assembly process.

100%

Fully Fasten
Wrench tighten all hardware in this step.

Inspection/Maintenance

Perform regular maintenance (see Inspection Label). Pay special attention to areas most susceptible to wear and tear, including but not limited to cables, pulleys and rubber grip. TFI recommends you maintain a service contract with a TFI Authorized Dealer or a Professional Service Company approved by TFI. Keep a service log of all maintenance and repair activities. Extra copies can be downloaded from our website www.tuffstuffitness.com

INSPECTIONS

Recommended Inspection Replace all parts at first signs of wear or damage.	DAILY	WEEKLY	MONTHLY	6-MONTH	YEARLY
INSPECT: Links, pull-pins, snap locks, swivels, connectors, selector pin, and welded-joints.	X				
CLEAN: Upholstery with lanolin-base cleaner. Do not use Windex.	X				
INSPECT: Cables, Belts and tension (adjust if needed).	X				
INSPECT: All labels		X			
INSPECT: All nuts and bolts (tighten if needed).		X			
INSPECT: Accessory bars, handles, rubber grips.		X			
INSPECT: All anti-skid surfaces.		X			
CLEAN & LUBRICATE: Clean guide rods with Super Lube® spray lubricant and lubricate with Super Lube® (PTFE) grease.			X		
LUBRICATE: Seat sleeves, pull-pin sliding mechanism, bushings and linear bearings.			X		
CLEAN & WAX: All powder-coat finishes.				X	
REPLACE: Cables & connecting parts.					X

Use only genuine TuffStuff replacement parts. Failure to do so will void warranty and could result in serious injury or death.

TuffStuff Fitness International
Chino, CA 91710, USA
www.tuffstuffitness.com BNH3137

INSPECTION / MAINTENANCE RECORDS

DATE	REPLACEMENT	REPAIRS	INSPECTED BY

WARRANTY REPAIRS

DATE	REPLACEMENT	REPAIRS	INSPECTED BY

Cable Inspection

WARNING:

THE FOLLOWING CONDITIONS MAY INDICATE A WORN CABLE. REPLACE IMMEDIATELY.

"NECKING", STRETCHED CABLE COVERING

A CRACK IN THE CABLE COVER

A TEAR IN THE CABLE COVER

A BREAK ON THE CABLE

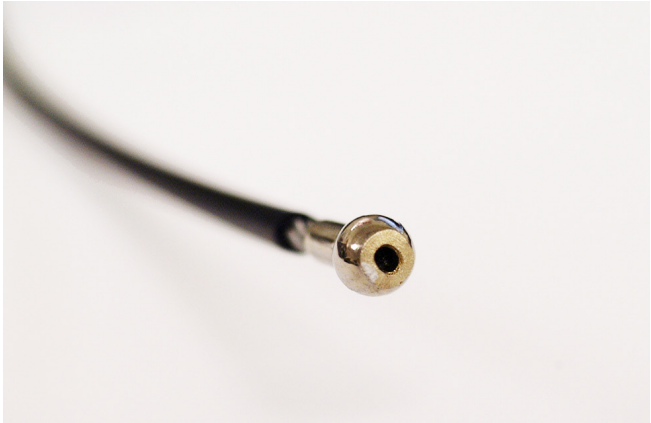

CABLE END SLIPPING OUT

IMPORTANT NOTE:

DAMAGED OR WORNED CABLE (AS SHOWN ABOVE) MAY DAMAGE THE PULLEY(S). YOU MUST INSPECT THE PULLEYS AT THIS TIME FOR WEAR AND TEAR. REPLACE IF NEEDED.

Step 1

NOTE:

1. It is strongly recommended that two people participate in the assembly of this unit.

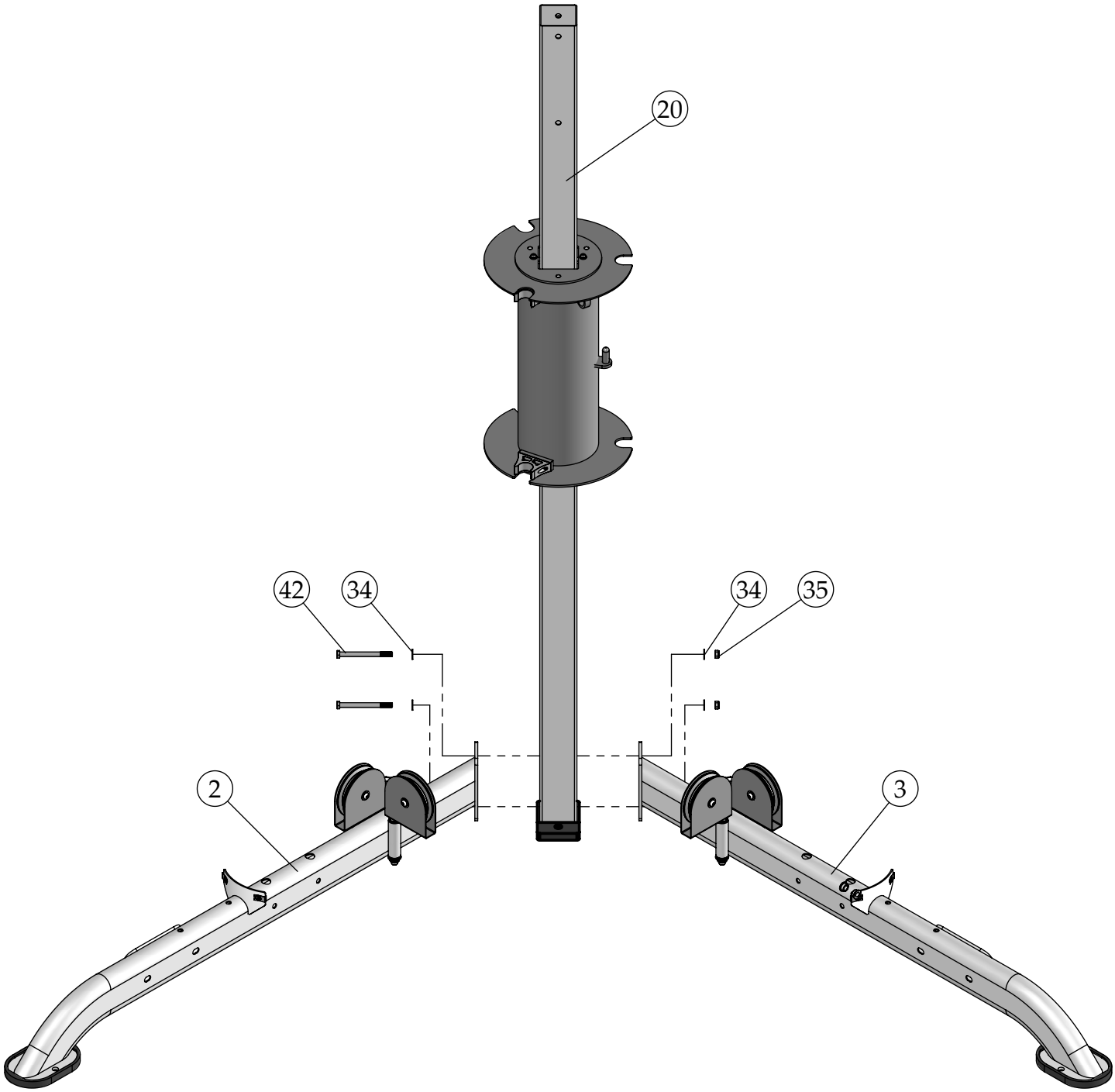

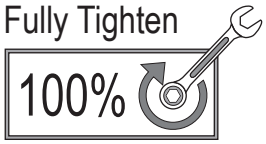

Fully Tighten

Wrench tighten all hardware in this step.

Step 2

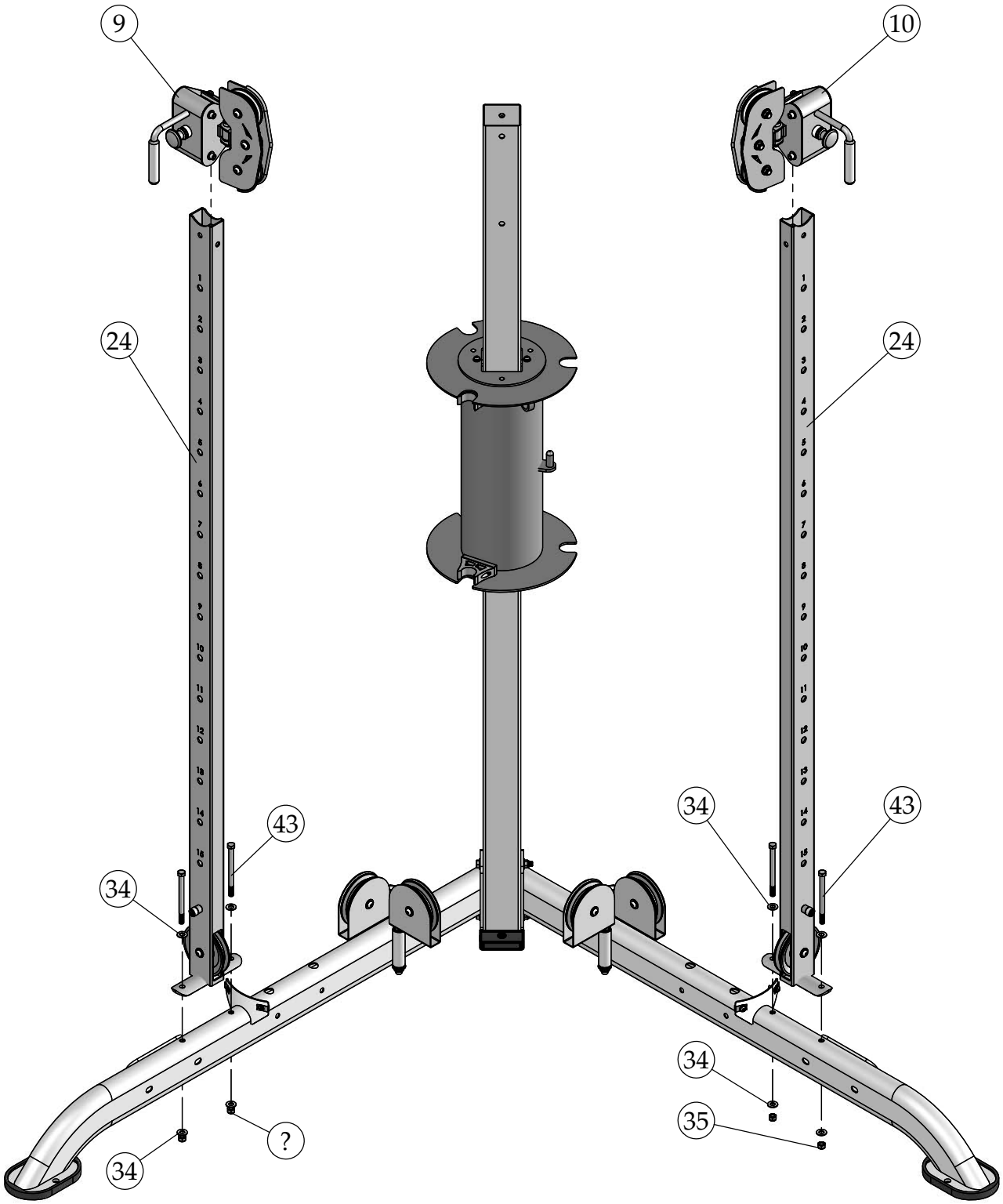

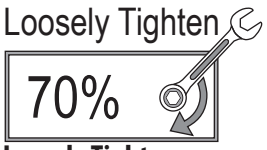

Loosely Tighten
Loosely tighten all hardware in this step.

Step 3

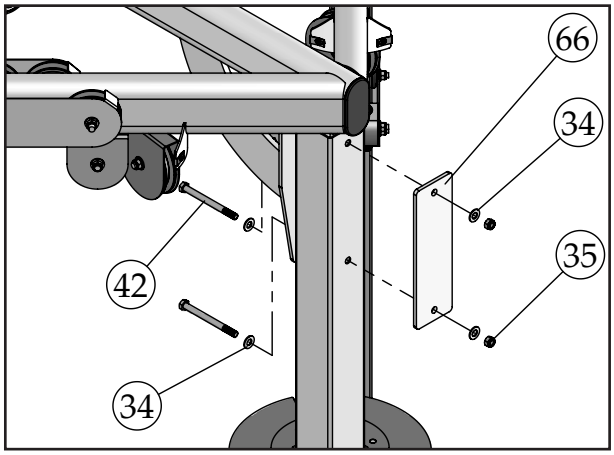

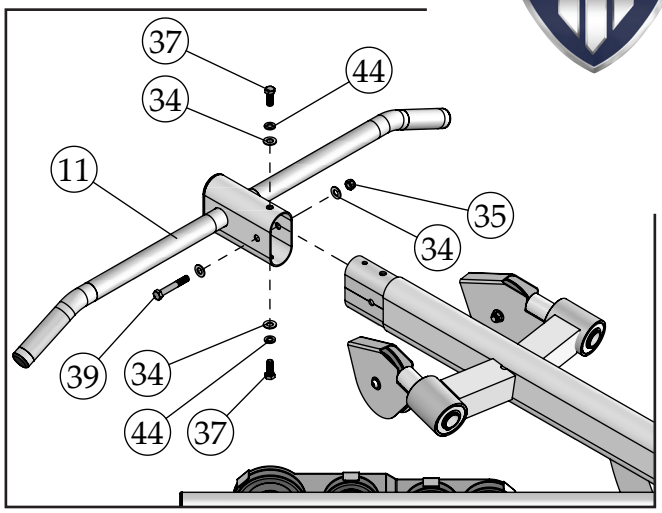

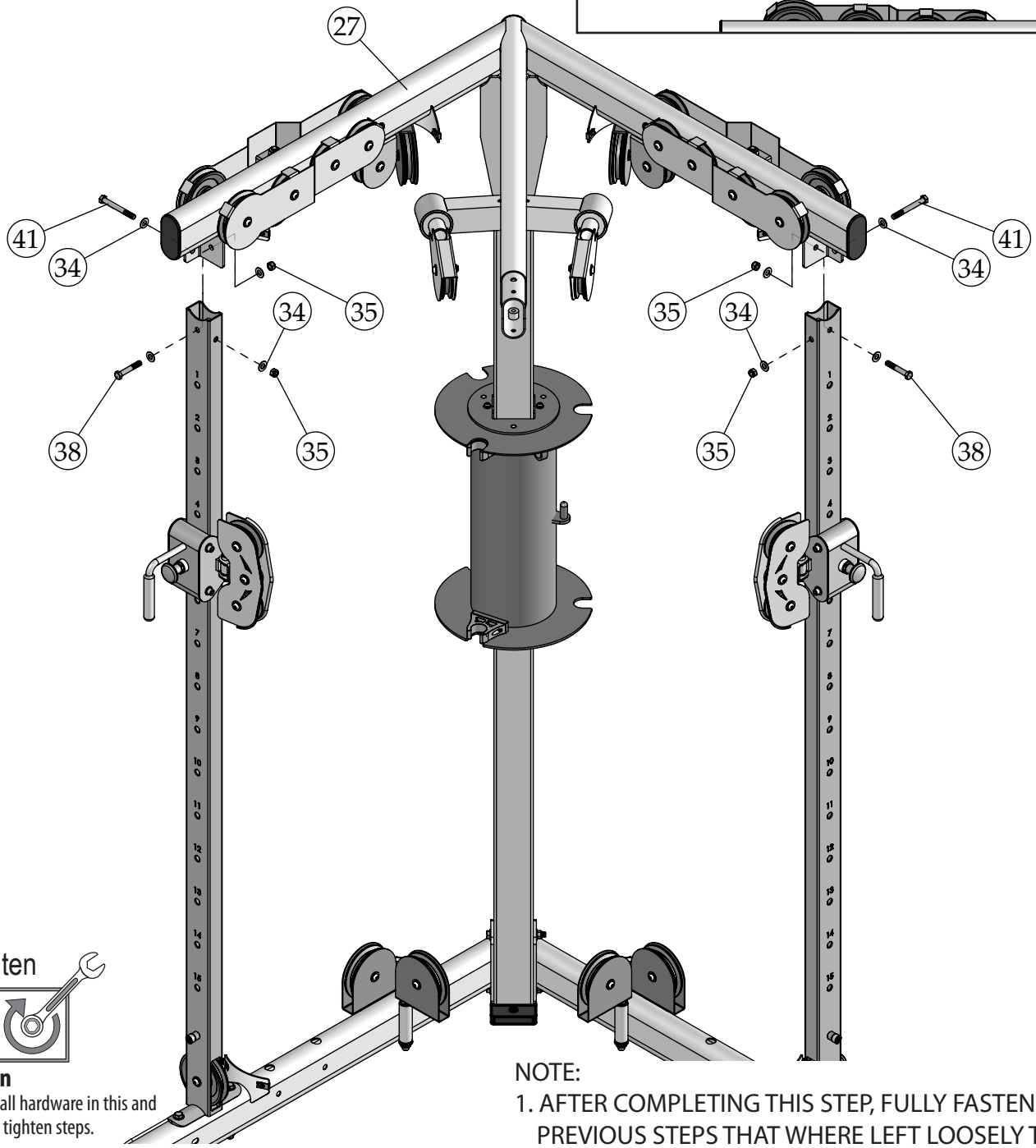

Fully Tighten

100%

Fully Tighten
Wrench tighten all hardware in this and previous loosely tighten steps.

NOTE:
1. AFTER COMPLETING THIS STEP, FULLY FASTEN ALL PREVIOUS STEPS THAT WHERE LEFT LOOSELY TIGHTEN.

Step 4

NOTE:

1. For 200 Lbs. weight stack option please turn to page 30.

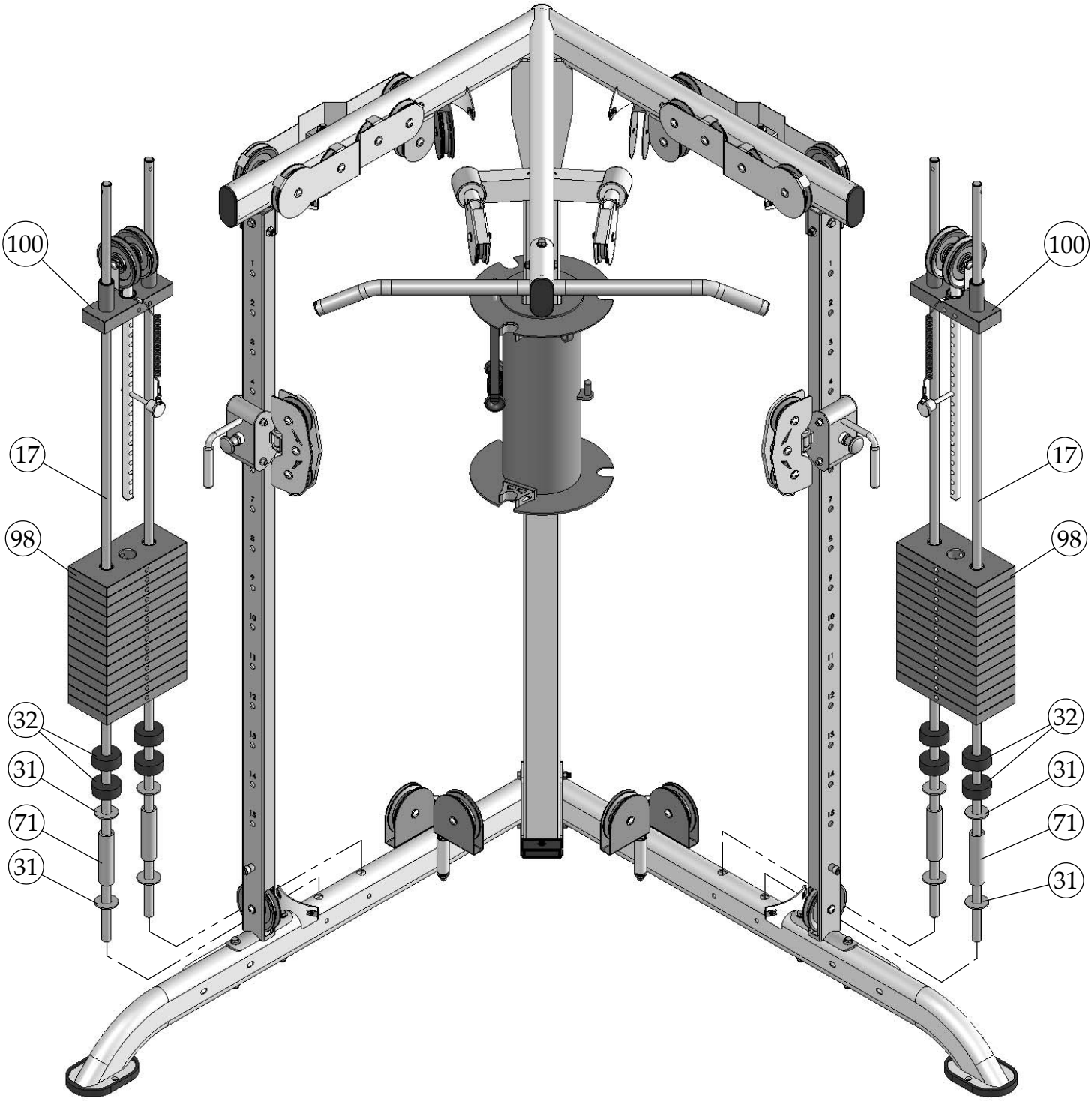

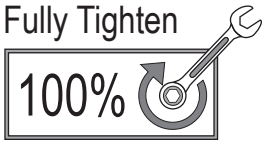

Fully Tighten

Wrench tighten all hardware in this step.

Step 5

NOTE:
1. Raise guide rods and assemble hardware as shown.

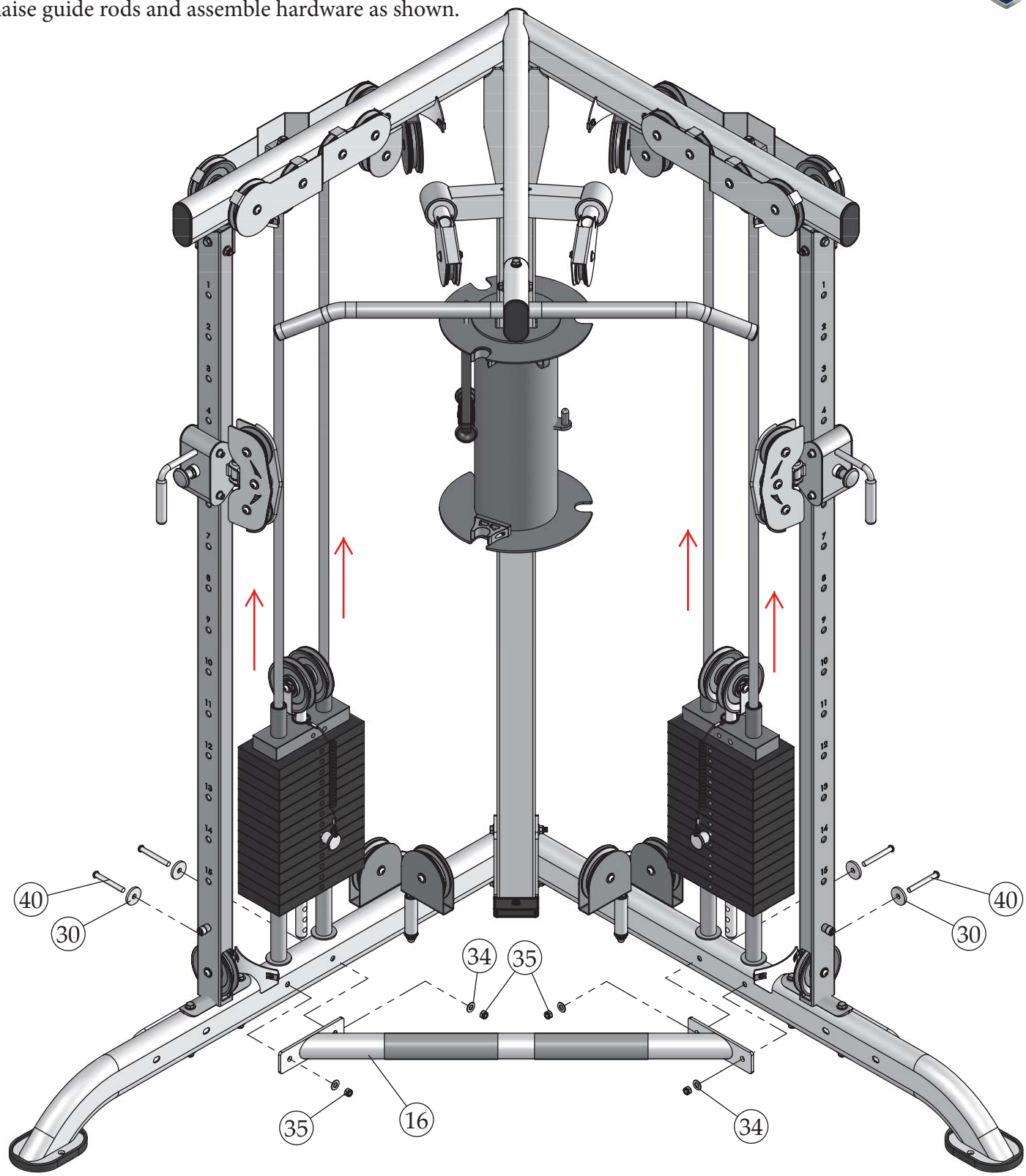

Fully Tighten

100%

Fully Tighten
Wrench tighten all hardware in this step.

Step 6

NOTE:
1. Top plate label goes on hole off center as shown. Label will cover hole on center.
2. After applying label, bolt the first weight plate to top plate.
3. This applies to both 150 Lbs and 200 Lbs weight stacks

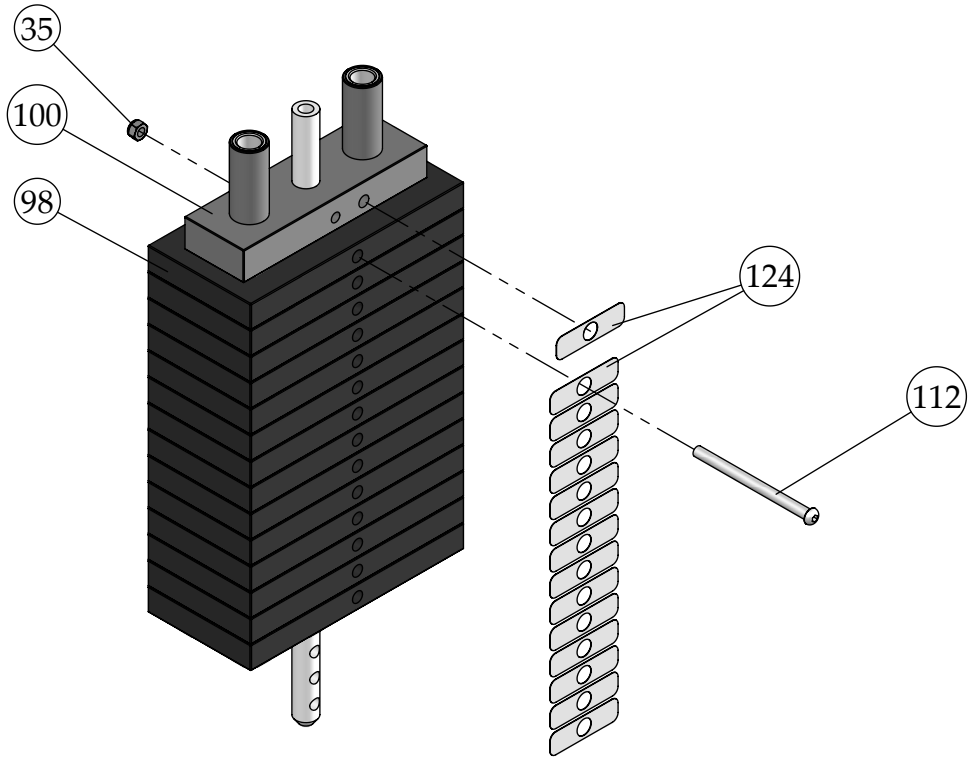

Weight stack label and lubrication instructions

1. Wipe front surface of weight stack with rubbing alcohol and wipe dry.
2. Peel off back sheet (adhesive side) from label (#123) and make sure that the label remains attached to the application tape.
3. Line up left edge of label sheet with outside edge of weight holes.
4. Line up the first label to hole on top plate.
5. Make sure label is straight and slowly press into place.
6. Gently remove application tape and rub each label firmly against the weight stack.
7. Allow labels to stand for 2 days to allow adhesive to cure fully.
8. Open the lube package provided and apply a thin film of lubricant around the first 3 inches of the guide rods above the top plate.
9. After the cables are installed, do a set of reps to spread the lubricant thoroughly.
10. Bolt the first weight plate with specified hardware as shown above. This is to counter balance the floating pulley brackets and the attachments so you can easily select weight.

Step 7 Hi/Low Cable

NOTE:
1. SOME PARTS NOT SHOWN FOR CLARITY.
2. PULLEY LABEL “E” IS BEHIND THE MACHINE. SEE NEXT PAGE FOR LOCATION.
3. AFTER PULLEY LABELED “K” CONTINUE ON NEXT PAGE.

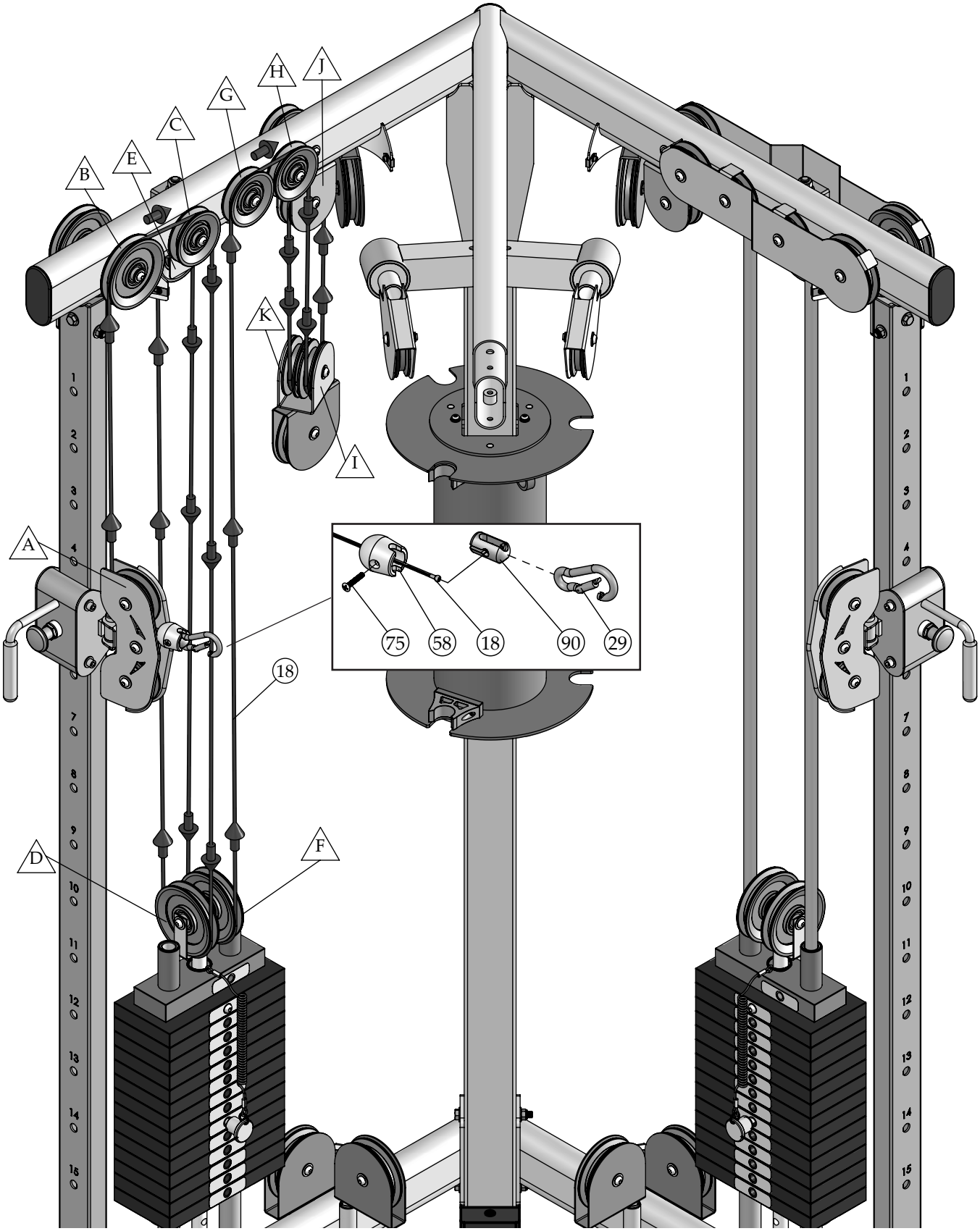

Step 7 Hi/Low Cable Continued

CONTINUED FROM PREVIOUS PAGE ON PULLEY "K"

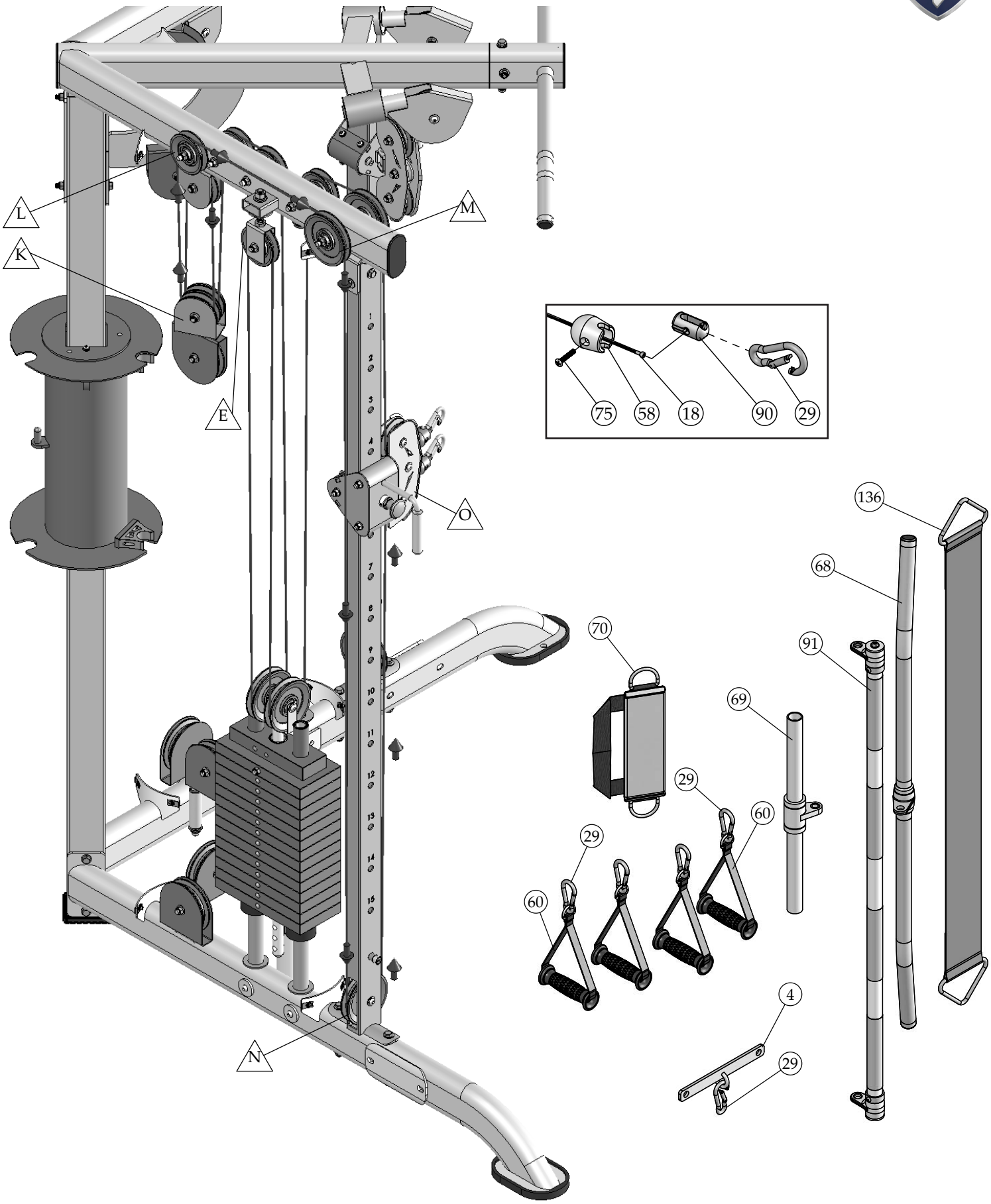

Step 8 Hi/Low Cable

NOTE:
1. SOME PARTS NOT SHOWN FOR CLARITY.
2. PULLEY LABEL “E” IS BEHIND THE MACHINE. SEE NEXT PAGE FOR LOCATION.
3. AFTER PULLEY LABELED “K” CONTINUE ON NEXT PAGE.

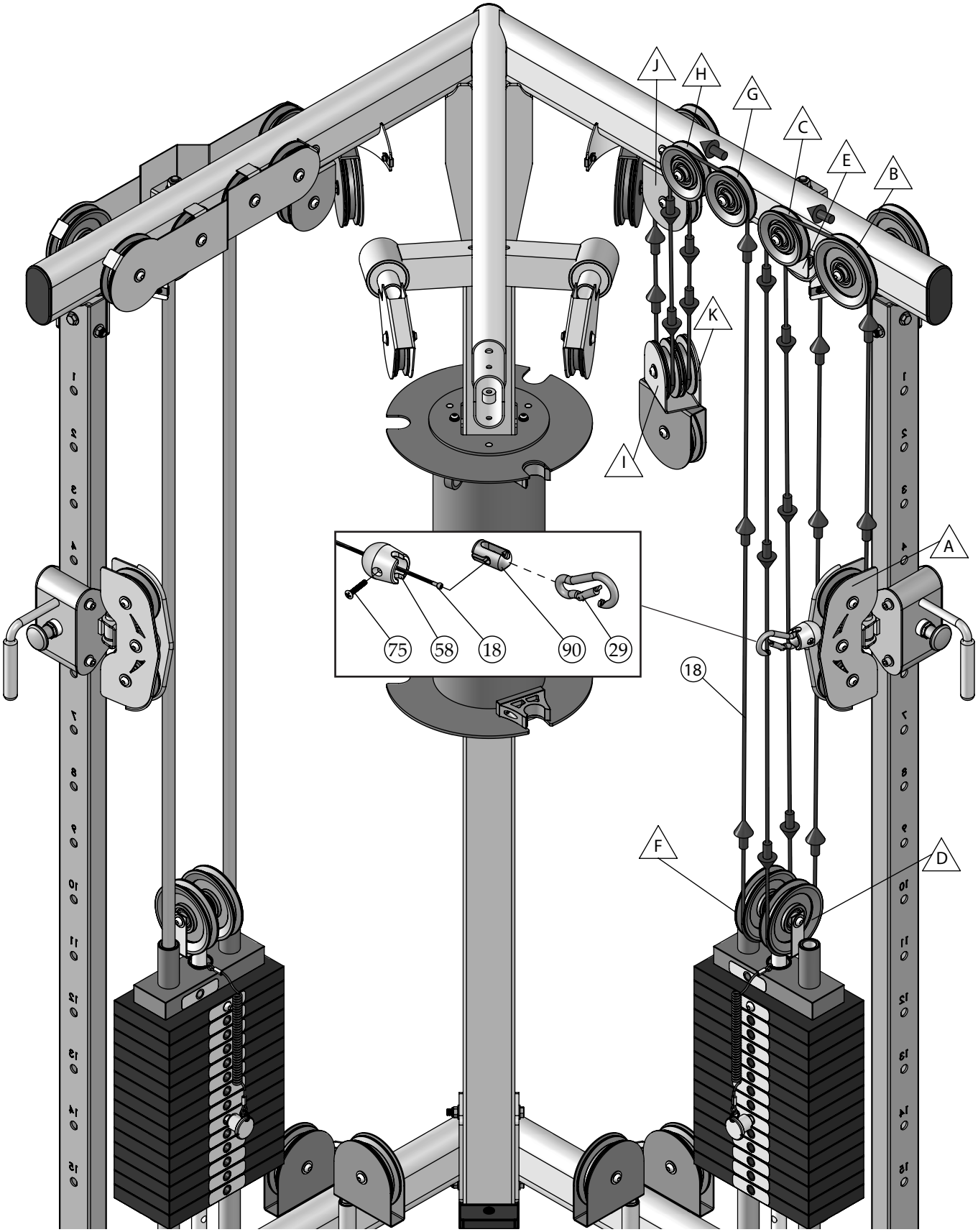

Step 8 Hi/Low Cable Continued

CONTINUED FROM PREVIOUS PAGE ON PULLEY "K"

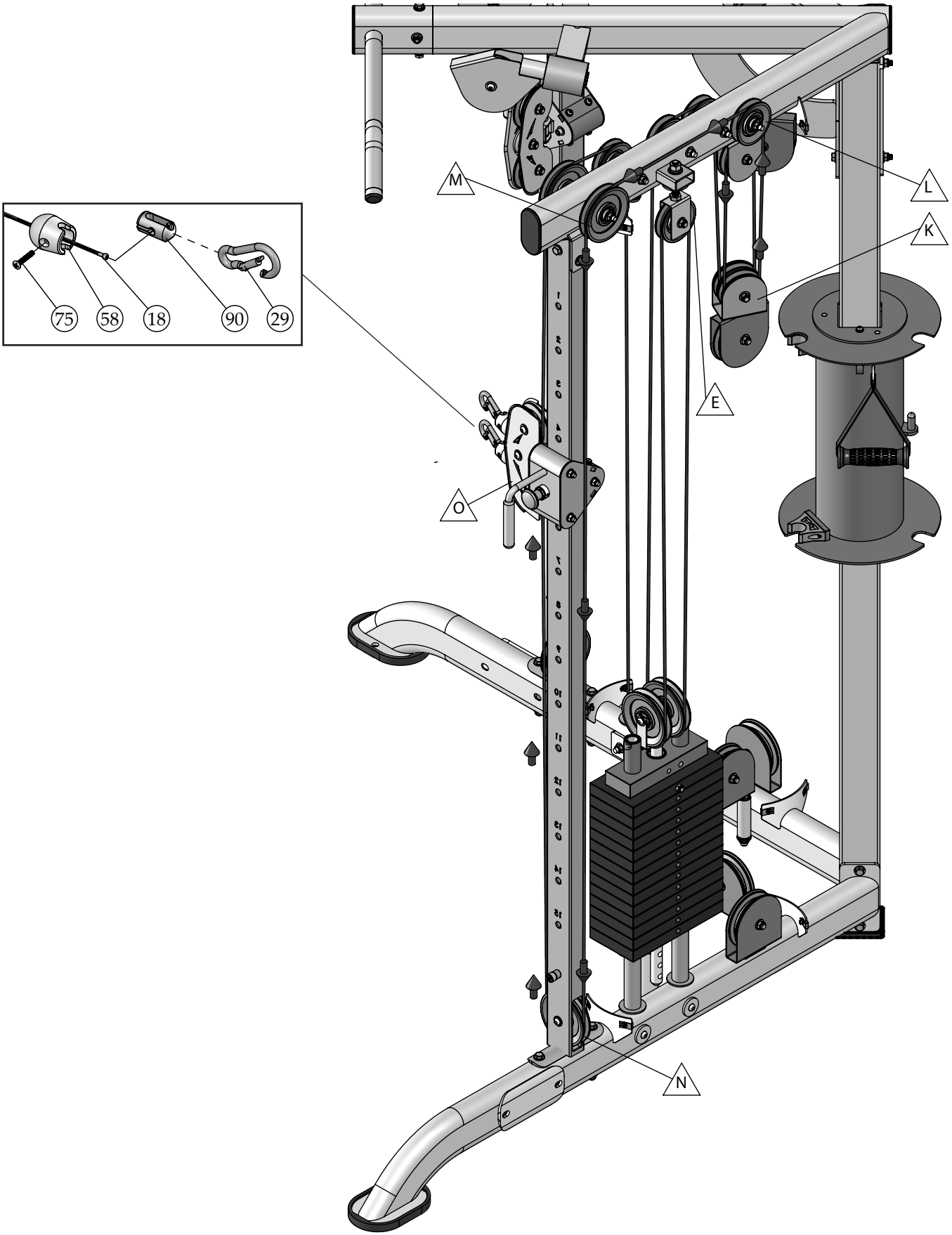

Step 9 Lat/Low Cable

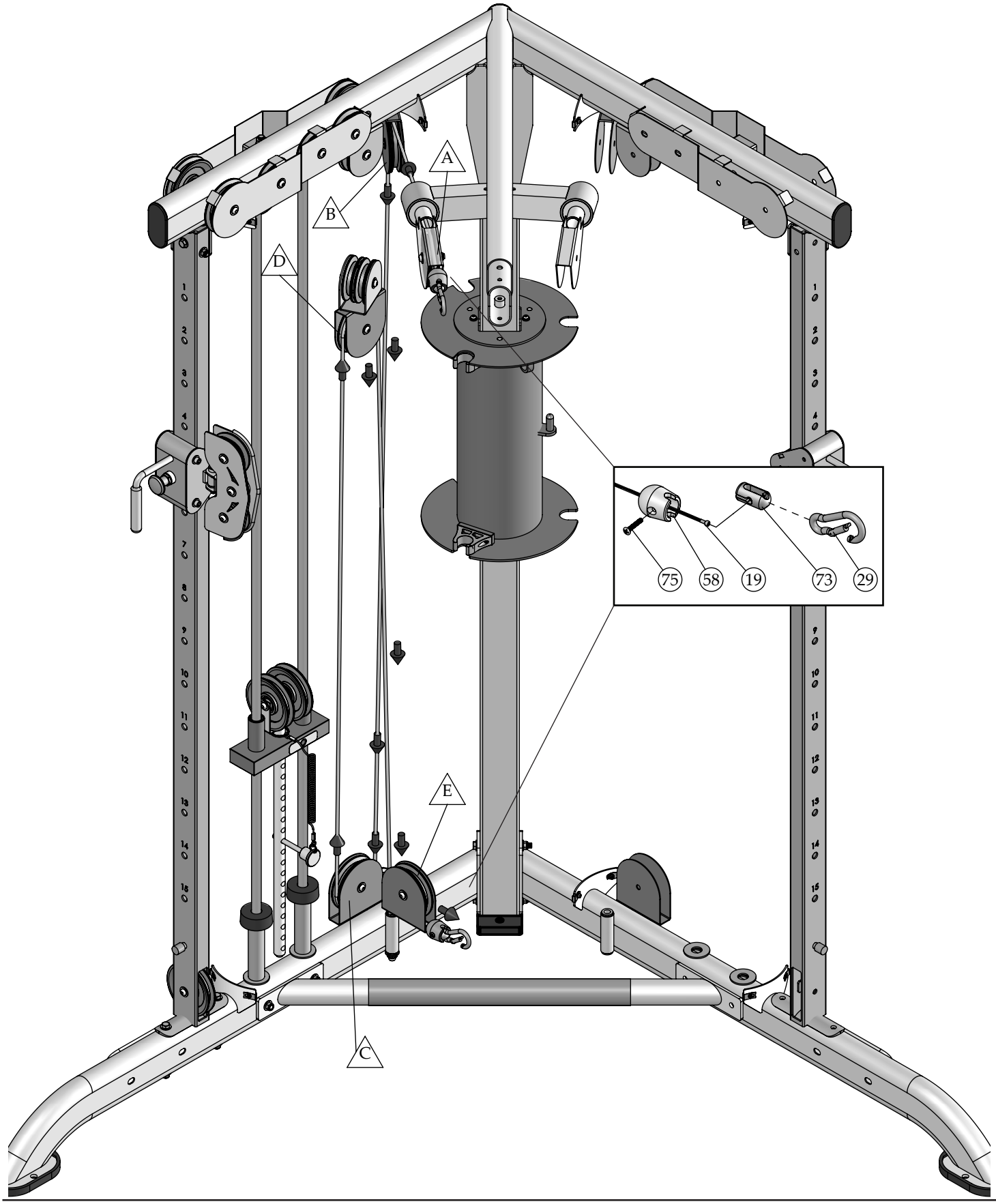

Step 10 Lat/Low Cable

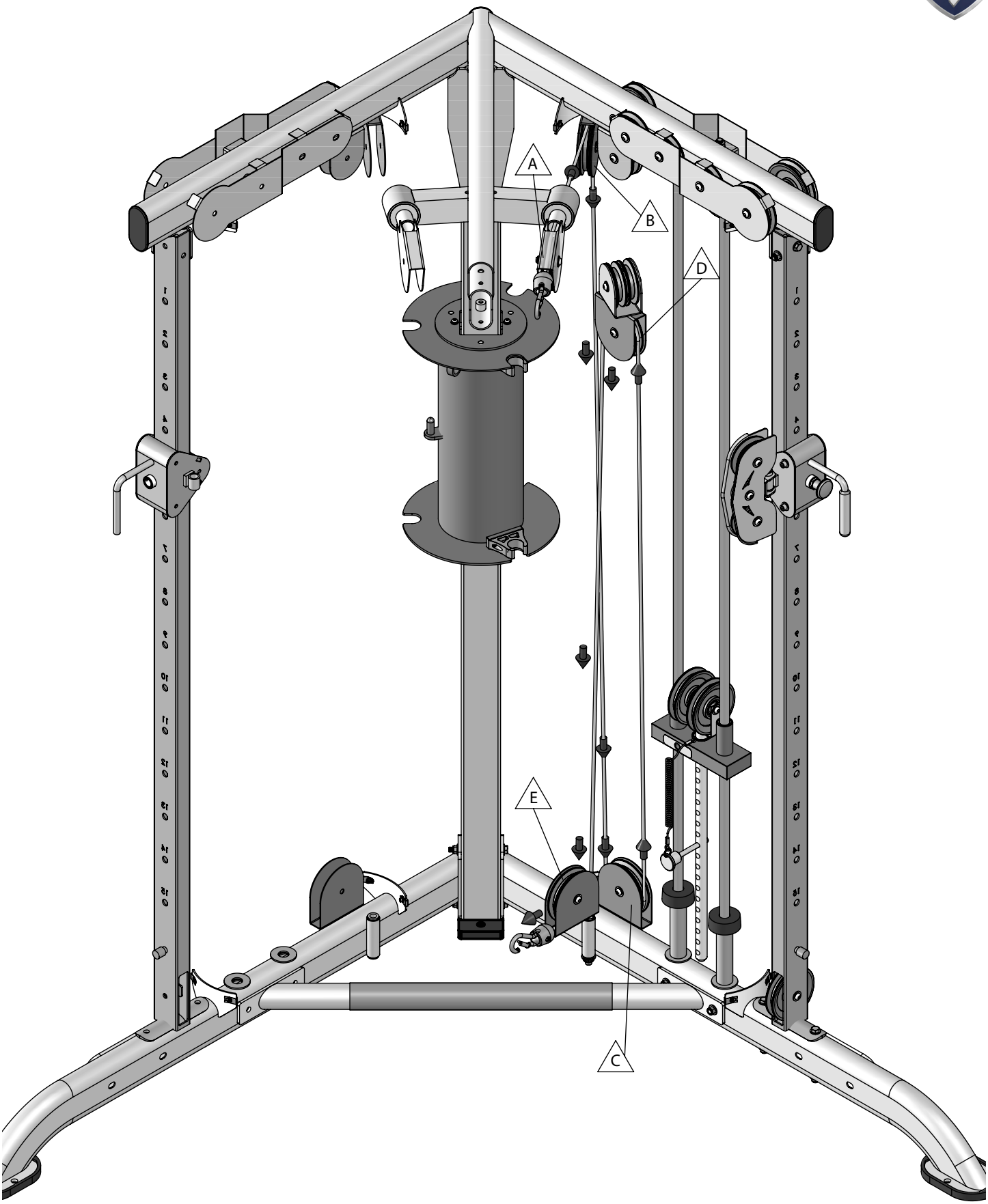

Step 11 Anti-Twist Cable

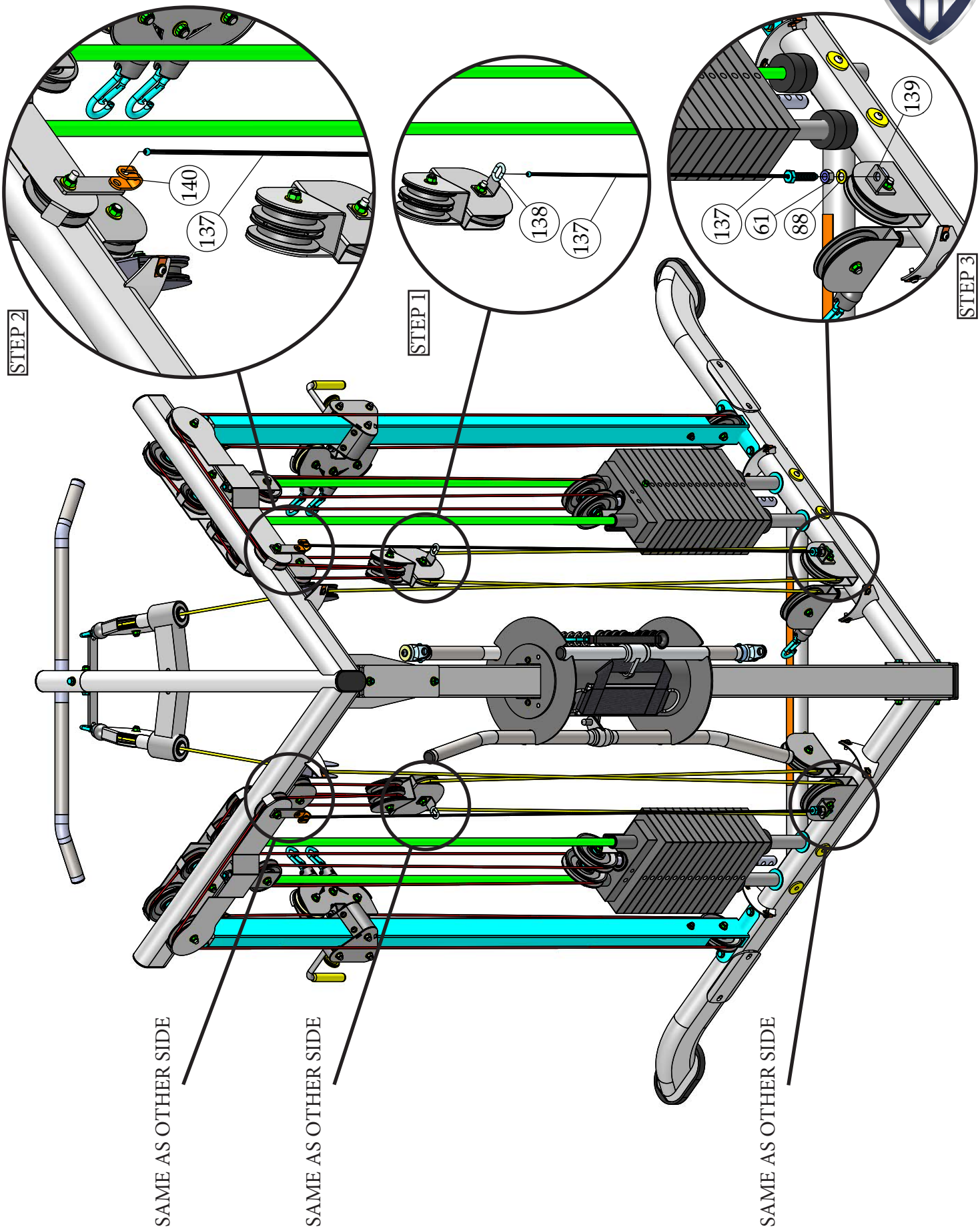

Step 12

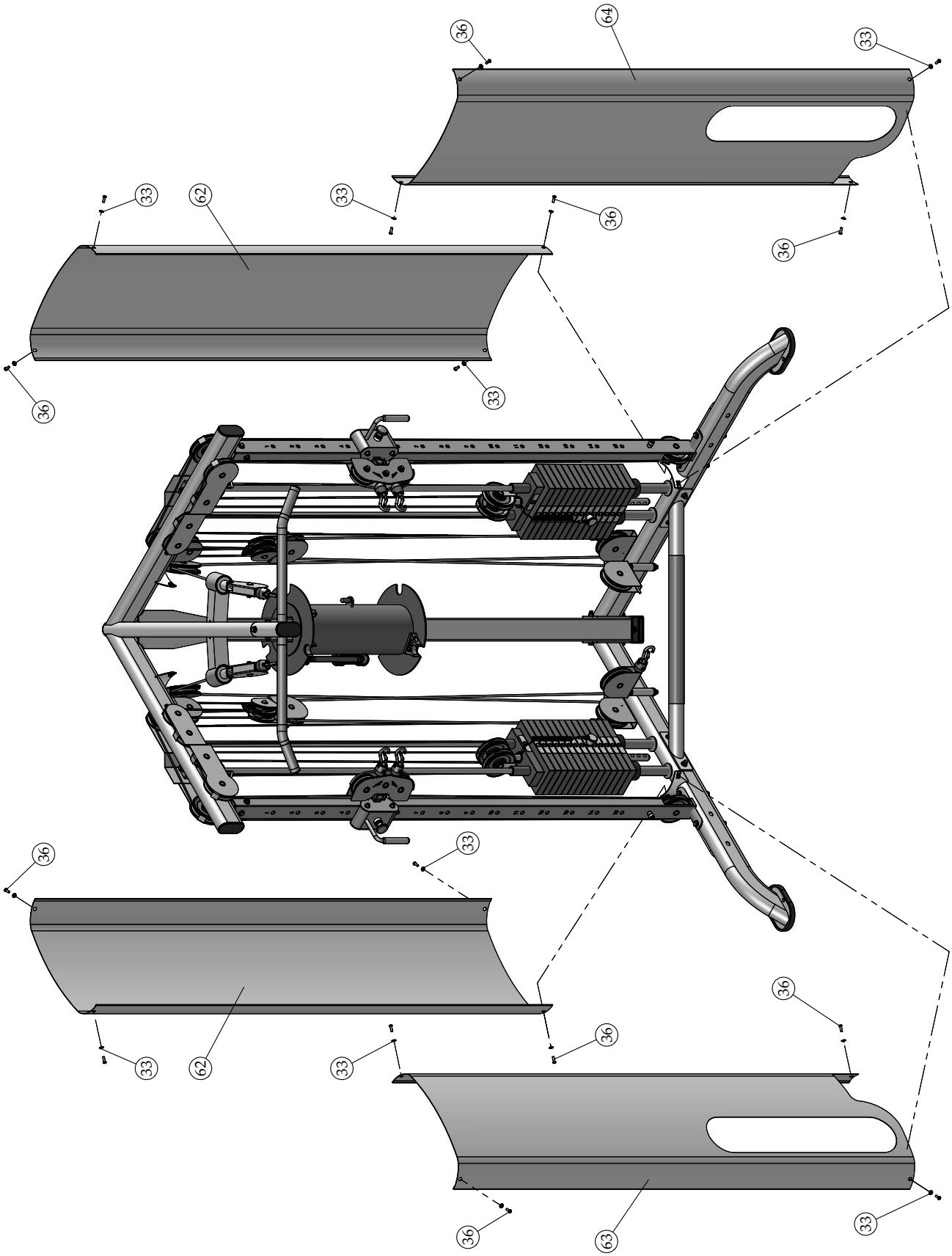

Parts List

COLOR CHART
GRAY= SUB-ASSEMBLY PARTS
BLACK= HARDWARE

CXT-200

Parts List

Item No.	Description	Rev.	Part No.	Qty.	Item No.	Description	Rev.	Part No.	Qty.
1	ADJUSTABLE 3 1/2 PULLEY BRACKET 4" BOLT	0	UP5831	2	52	BUTTON HEAD SOCKET CAP SCREW GR-8 Z/P 3/8-16 X 2 3/4		BNH2996	2
2	BASE FRAME LT	0	UP7701	1	53	TOP SWIVEL PULLEY BRACKET	0	UP3634	2
3	BASE FRAME RT	0	UP7702	1	54	BUTTON HEAD SOCKET CAP SCREW GR-8 B-Z/P 3/8-16 X 3 3/4		BNH2435	6
4	CABLE BRIDGE BRACKET	0	UP7700	1	55	BUTTON HEAD SOCKET CAP SCREW GR-8 B-Z/P 3/8-16 X 4 1/4		BNH2438	2
5	CABLE RETAINER BRACKET (L-SHAPED)	0	UP0014	4	56	TOP PLATE DOUBLE PULLEY HOLDER	0	UP7689	2
6	CAROUSEL	0	UP7703	1	57	BUTTON HEAD SOCKET CAP SCREW GR-8 B-Z/P 3/8-16 X 6		BNH2444	2
7	CAROUSEL COVER PLATE	0	UP7704	1	58	CABLE STOPPER SHELL 1 1/2 X 1 3/4		BNH4230	8
8	CARRIAGE COVER PLATE	0	UP6765	2	59	CAROUSEL INNER WHEEL		BNH3247	3
9	CARRIAGE LT	0	UP7685	1	60	CONTOUR ERGO HANDLE LONG STRAP		BNH2738	4
10	CARRIAGE RT	0	UP7686	1	61	FINISHED HEX NUT Z/P 1/2-13		BNH0206	6
11	CHIN UP BAR	0	UP7706	1	62	REAR WEIGHT SHIELD	0	UP8382	2
12	FRONT PULLEY COVER PLATE LT	0	UP7692	1	63	FRONT WEIGHT SHIELD LT	0	UP8383	1
13	FRONT PULLEY COVER PLATE RT	0	UP7693	1	64	FRONT WEIGHT SHIELD RT	0	UP8384	1
14	DOUBLE PULLEY FLOATING BRAKCET LT	0	UP7690	1	65	FLAT WASHER SAE Z/P 1/2"		BNH2031	6
15	DOUBLE PULLEY FLOATING BRAKCET RT	0	UP7691	1	66	REINFORCEMENT PLATE 1/4 X 3 X 9	0	UP7783	1
16	FOOT SUPPORT	0	UP7707	1	67	FLAT WASHER SAE Z/P 5/16"		BNH4136	14
17	HARD CHROME GUIDE ROD 3/4 X 76 7/8	0	UP3898	4	68	LAT BAR 1 1/4 ALUMINUM		BNH1770	1
18	HI-LO CABLE	0	UP7694	2	69	LOW ROW BAR 1 1/4 ALUMINUM		BNH1771	1
19	LAT CABLE	0	UP7695	2	70	NYLON ANKLE STRAP		BNH3203	1
20	REAR POST	0	UP7705	1	71	WEIGHT STACK SPACER 1 1/4 RD X 5	0	UP6745	4
21	REAR PULLEY COVER PLATE LT	0	UP7699	1	72	NYLON INSERT JAM LOCK NUT GR-8 Z/P 1/2-13		BNH2997	2
22	REAR PULLEY COVER PLATE RT	0	UP7770	1	73	7/8 RD X 1 5/8 LINK 3/16 CABLE		BNH4232	4
23	SELECTOR PIN W/COIL 3/8 X 4 GOLD KNOB	0	UP3035	2	74	NYLON INSERT LOCK NUT Z/P 5/16-18		BNH0219	6
24	NICKLE PLATED SELECTOR POST	0	UP7708	2	75	OVAL HEAD PHILLIPS MACHINE SCREW Z/P #10-32 X 1 1/8		BNH2793	8
25	SWIVEL DOUBLE PULLEY BRACKET	0	UP7688	2	76	PLASTIC INSERT CAP 1 1/4" RD 11 GA		BNH0573	6
26	SWIVEL PULLEY BRACKET	0	UP3637	2	77	PLASTIC INSERT CAP ELLIPTICAL 2 X 4		BNH1794	4
27	TOP FRAME	0	UP7709	1	78	PULL PIN 1/2 X 2 3/4 SHORT NOSE (YELLOW KNOB)		BNH0640	2
28	COIL CHAIN Z/P 3/16 X 8		BNH1214	2	79	RETAINING SNAP RING EXT. PLAIN 1 1/4"		BNH1718	2
29	SNAP LINK Z/P 8MM X 80MM		BNH0065	13	80	ROLLER WHEEL		BNH2869	6
30	FLAT WASHER B-Z/P 3/8 ID X 1 1/2 OD X 3/16		BNH2396	4	81	PHILLIPS HEAD MACHINE SCREW Z/P 10-32 X 3/4		BNH3244	4
31	FLAT WASHER B-Z/P 3/4 X 2		BNH2128	8	82	ROUND TURNTABLE 4 1/2" ID		BNH3246	1
32	RUBBER DONUT 3/4 X 2 1/2		BNH0068	8	83	1 1/4 RUBBER POLE STORAGE CLIP		BNH3243	2
33	FLAT WASHER SAE Z/P #12 (1/4")		BNH2982	29	84	RUBBER FOOT FOR 6 X 4 1/4 PLATE		BNH1647	2
34	FLAT WASHER SAE Z/P 3/8"		BNH2030	102	85	RUBBER GROMMET 3/4" ID X 21/32		BNH3245	4
35	NYLON INSERT JAM LOCK NUT GR-8 B-Z/P 3/8-16		BNH2450	55	86	SHOULDER BOLT ALLOY 1/2 X 1 1/2		BNH0098	2
36	BUTTON HEAD SOCKET CAP SCREW B-Z/P 1/4-20 X 3/4		BNH2588	18	87	2" NYLON PULLEY		BNH3084	2
37	HEX HEAD CAP SCREW GR-5 Z/P 3/8-16 X 1		BNH2037	2	88	SPLIT LOCK WASHER B-Z/P 1/2"		BNH2519	6
38	HEX HEAD CAP SCREW GR-5 Z/P 3/8-16 X 2 1/4		BNH2042	2	89	SPLIT LOCK WASHER B-Z/P 1/4		BNH2686	18
39	HEX HEAD CAP SCREW GR-5 Z/P 3/8-16 X 2 1/2		BNH2044	1	90	7/8 RD X 1 5/8 LINK 1/8 CABLE		BNH4231	4
40	HEX HEAD CAP SCREW GR-5 Z/P 3/8-16 X 3		BNH2046	4	91	SQUAT BAR 46" DOUBLE LINK (TUBULAR)		BNH3228	1
41	HEX HEAD CAP SCREW GR-5 Z/P 3/8-16 X 3 1/4		BNH2050	2	92	SCREW HEAD HOUSING (CXT-200)		BNH3249	2
42	HEX HEAD CAP SCREW GR-5 Z/P 3/8-16 X 4		BNH2267	4	93	SOCKET SET SCREW Z/P 10-32 X 1/8		BNH2088	2
43	HEX HEAD CAP SCREW GR-5 Z/P 3/8-16 X 4 3/4		BNH2063	4	94	RUBBER FOOT 3 X 4 1/2		BNH0607	1
44	SPLIT LOCK WASHER B-Z/P 3/8"		BNH2520	2	95	U-STYLE TAPPED HOLE NUT 1/4-20		BNH0708	16
45	LUBRICANT CONTAINER		BNH0704	1	96	YELLOW GRIP 1/2 X 4 (PVC)		BNH3059	2
46	HEX KEY 1/8"		BNH2541	1	97	SPACER BUSHING 10.5 X 15.5 X 8.5 X 20 X 2		BNH3250	4
47	HEX KEY 5/32"		BNH2545	1	98	10 LB STEEL WEIGHT PLATE BLACK 4 9/16 X 9 7/16 ASSY		BNH1660	28
48	HEX KEY 3/16"		BNH2542	1	99	HEX NUT M8		BNH3252	2
49	HEX KEY ALLOY 7/32"		BNH0575	1	100	10 LB TOP PLATE W/ADJ SLTR BAR 19 BLK WTS ASSY		BNH1982	2
50	HEX KEY ALLOY 1/4"		BNH0375	1	101	SOCKET CAP SCREW GR-8 Z/P 8MM X 65 MM		BNH3253	2
51	COIL CHAIN Z/P 3/16 X 21		BNH1262	2	102	STOPPER SPACER (CXT-200)		BNH3251	2

Parts List Continued

103	ANTI-SKID TAPE 3 X 8 3/4	BNH3248	2	**123**	LABEL-INSPECTIONS RECOMMENDED INSPECTION…		BNH3137	1
104	BALL BEARING R20-RS (1.1805 I.D. X 2.1675 X .51)	BNH1712	4	**124**	LABEL-NUMBERS 10-200 LBS/KGS 7/8 X 3 YELLOW & BLACK		BNH4069	2
105	BLACK NYLON PULLEY WIDE GROOVE 3/8 X 1 X 3 1/2	BNH2832	20	**125**	LABEL-SCHEDULE REPLACEMENT PARTS…		BNH3135	1
106	BLACK NYLON PULLEY WIDE GROOVE 3/8 X 1 X 4 1/2	BNH2834	20	**126**	LABEL-TFI SERIAL NO. 2.5 X 1.5		BNH3147	1
107	BRONZE BUSHING SAE 841 (302033) .502X.628 X 1/2 X 7/8 X 1/8"	BNH0528	8	**127**	LABEL WARNING MACHINE MUST BE BOLTED DOWN…		BNH4416	3
108	BUTTON HEAD SOCKET CAP SCREW B-Z/P 1/4-20 X 1/2	BNH4091	19	**128**	LABEL-WARNING KEEP BODY, HANDS, 1 1/2 X 2 1/4		BNH2908	2
109	BUTTON HEAD SOCKET CAP SCREW Z/P 3/8-16 X 1 3/4	BNH2426	20	**129**	LABEL-WARNING KEEP BODY, HANDS...		BNH2926	2
110	BUTTON HEAD SOCKET CAP SCREW GR-8 B-Z/P 3/8-16 X 2	BNH2427	4	**130**	LABEL-WARNING_SERIOUS INJURY OR DEATH		BNH3134	1
111	BUTTON HEAD SOCKET CAP SCREW B-Z/P 5/16-18 X 4	BNH4044	6	**131**	LABEL-WARRANTY LIGHT COMMERCIAL		BNH3229	1
112	BUTTON HEAD SOCKET CAP SCREW GR-8 B-Z/P 3/8-16 X 5	BNH2440	2	**132**	LABEL-CXT-200 RESISTANCE RATIO AT THE HANDLE 3X6		BNH3150	2
113	FACILITY SIGN BE ALERT! THE FITNESS EQUIPMENT...	BNH3138	1	**133**	TFI EMBLEM 4 HIGH X 4.23 WIDE BLUE AND CHROME		BNH4305	2
114	LABEL-CAUTION CHECK PULL-PIN IS FULLY... 1 1/2 X 1 3/8	BNH2912	2	**134**	LABEL-DANGER SECURE BAR CATCH (SIZE 6 X 4)		BNH3004	1
115	LABEL-CXT-200 EXERCISE CHART 6 X 14	BNH3151	1	**135**	SUPER LUBE TEFLON LUBRICANT 82340		BNH0704	1
116	LABEL-CXT-200 EXERCISE CHART 6 X 29	BNH3152	1	**136**	NYLON CHIN-UP STRAP		BNH4489	1
117	LABEL-DANGER CHECK RETAINING NUT... 1.5 X 1	BNH3146	2	**137**	**ANTI-TWIST CABLE**	**0**	**UP9231**	**2**
118	LABEL-DANGER DO NOT LEAN AGAINST OR PULL...	BNH3145	2	**138**	**FLOATING PULLEY RETRO FIT BRACKET**	**0**	**UP9232**	**2**
119	LABEL-DANGER USE THIS EQUIPMENT ONLY...	BNH2903	1	**139**	**MAIN FRAME RETRO FIT BRACKET**	**0**	**UP8530**	**2**
120	LABEL-IMPORTANT ADJUST CABLE TENSION HERE	BNH2924	2	**140**	**TOP FRAME RETRO FIT BRACKET**	**0**	**UP9252**	**2**
121	LABEL-IMPORTANT FOR SMOOTH PERFORMANCE...	BNH2916	2	**141**	BUTTON HEAD SOCKET CAP SCREW GR-8 Z/P 3/8-16 X 4		BNH2436	2
122	LABEL-IMPORTANT FOR SMOOTH PERFORMANCE...	BNH2925	2					

Basic Exercise Guide

Use this equipment only for the exercises as shown. Know your limitations. If you are new to weight training, always start with lighter weight, learn how to perform the exercise correctly and train at a controlled rate of speed. Warm up properly with stretchings, calisthenics or cardiovascular exercises. Never hold your breath – general rule of thumb is to exhale when you exert.

TRICEP PRESSDOWN**

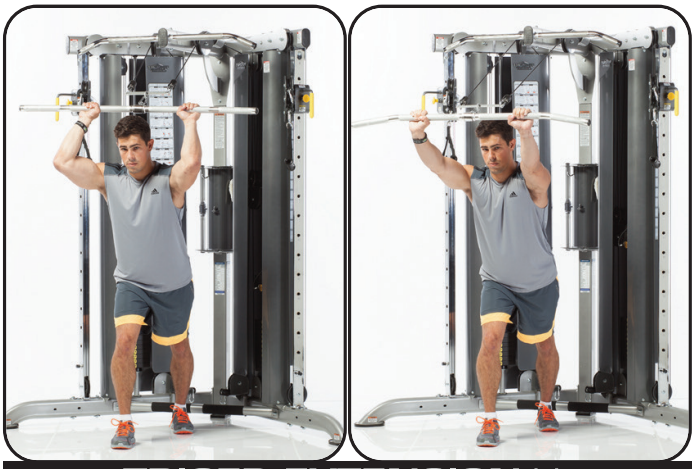

TRICEP EXTENSION**

**CAN BE PERFORMED WITH THE LOW ROW BAR OR NYLON HANDLES.

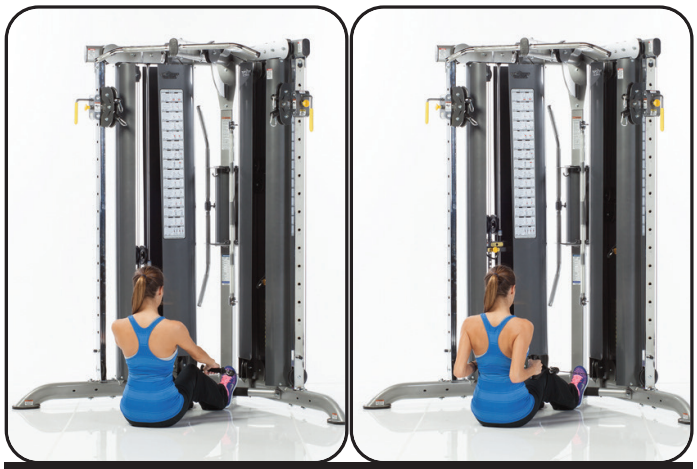

LOW ROW

SIT UP

CROSSOVER

WOOD CHOP

Basic Exercise Guide

Use this equipment only for the exercises as shown. Know your limitations. If you are new to weight training, always start with lighter weight, learn how to perform the exercise correctly and train at a controlled rate of speed. Warm up properly with stretchings, calisthenics or cardiovascular exercises. Never hold your breath – general rule of thumb is to exhale when you exert.

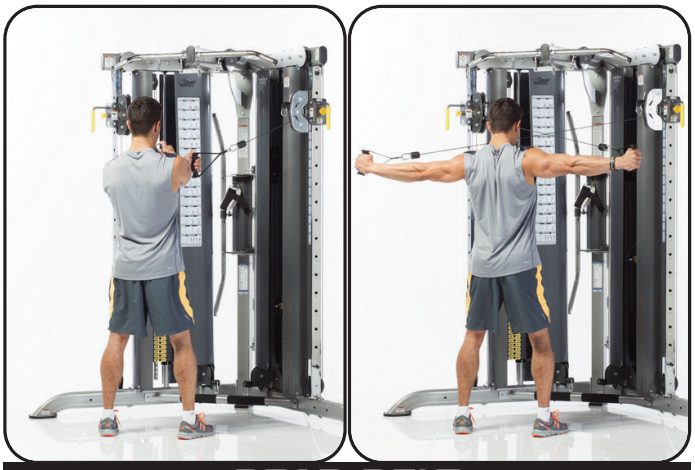

REAR DELT

ONE ARM PRESSDOWN

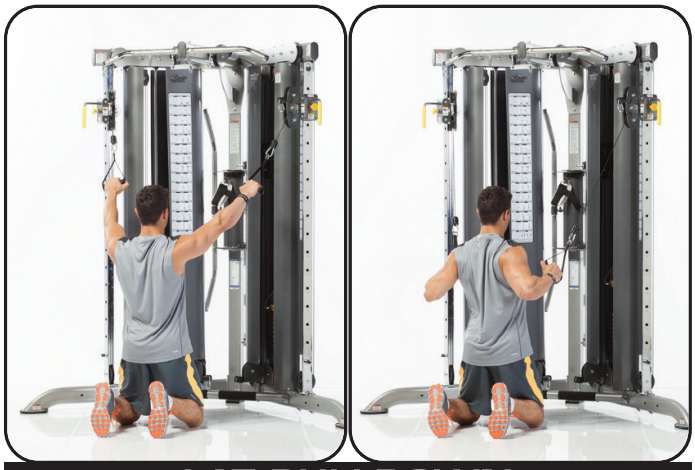

LAT PULLDOWN

CHEST FLY

CHEST PRESS

ALTERNATING PRESS

Basic Exercise Guide

Use this equipment only for the exercises as shown. Know your limitations. If you are new to weight training, always start with lighter weight, learn how to perform the exercise correctly and train at a controlled rate of speed. Warm up properly with stretchings, calisthenics or cardiovascular exercises. Never hold your breath – general rule of thumb is to exhale when you exert.

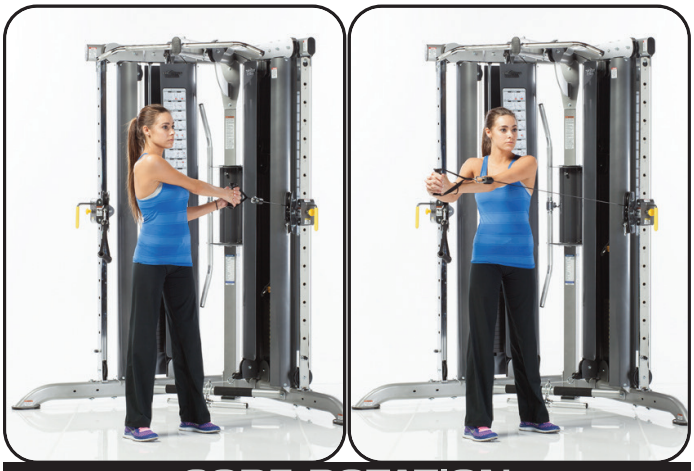

CORE ROTATION

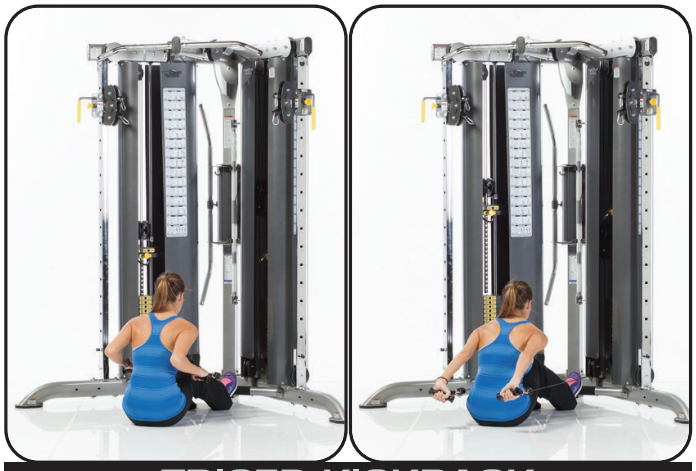

TRICEP KICKBACK

SHOULDER PRESS*

ALTERNATING PRESS

*CAN BE PERFORMED WITH THE SQUAT BAR.

SQUATS*

OFFER UP

*CAN BE PERFORMED WITH THE SQUAT BAR.

Basic Exercise Guide

Use this equipment only for the exercises as shown. Know your limitations. If you are new to weight training, always start with lighter weight, learn how to perform the exercise correctly and train at a controlled rate of speed. Warm up properly with stretchings, calisthenics or cardiovascular exercises. Never hold your breath – general rule of thumb is to exhale when you exert.

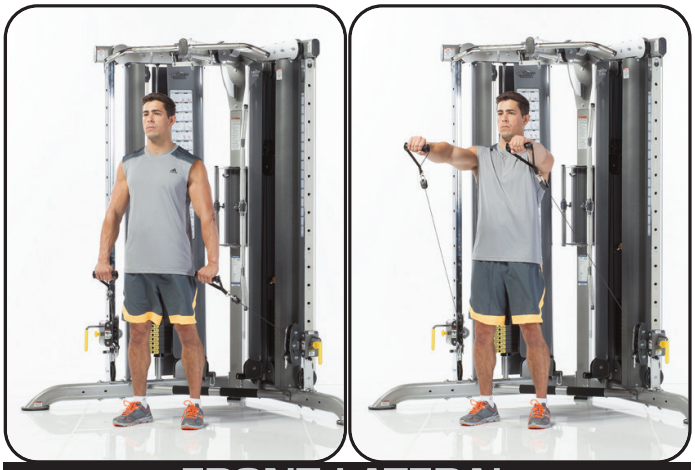

FRONT LATERAL

STANDING CURLS*

*CAN BE PERFORMED WITH THE SQUAT BAR.

ONE ARM CURL

ONE ARM ROW

INNER THIGH

OUTER THIGH

Basic Exercise Guide

Use this equipment only for the exercises as shown. Know your limitations. If you are new to weight training, always start with lighter weight, learn how to perform the exercise correctly and train at a controlled rate of speed. Warm up properly with stretchings, calisthenics or cardiovascular exercises. Never hold your breath – general rule of thumb is to exhale when you exert.

GLUTE KICK

CALF RAISE

LUNGES

LATERAL LUNGES

Safety Precautions (For CXT-225 option)

1. The **Weight Lift Bar (**CXT-225 Owner's Manual part #8) has a twist locking mechanism that allows you to safely lock out the **Weight Lift Bar (**CXT-225 Owner's Manual part #8) at virtually any setting. See **Fig. A**

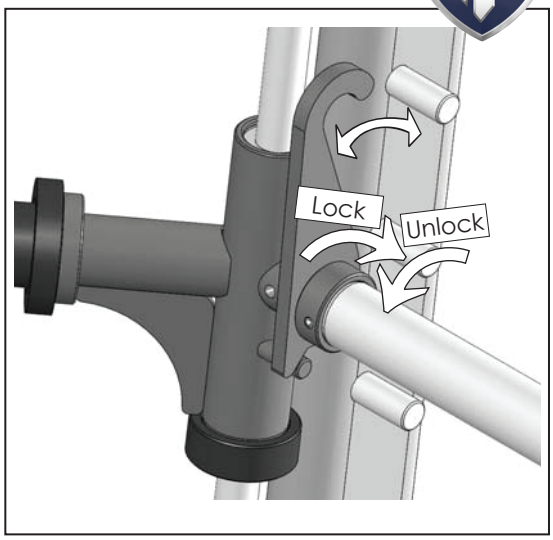

Fig. A *Illustration above depicts the **Weight Lift Bar** locking mechanism.*

2. If you are adding or storing weight plates on the **Weight Prongs (**CXT-225 Owner's Manual part **#11, #12)**, do not over-load them. Allow enough space for weight collars. (Collars must be purchased separately) See **Fig. B**

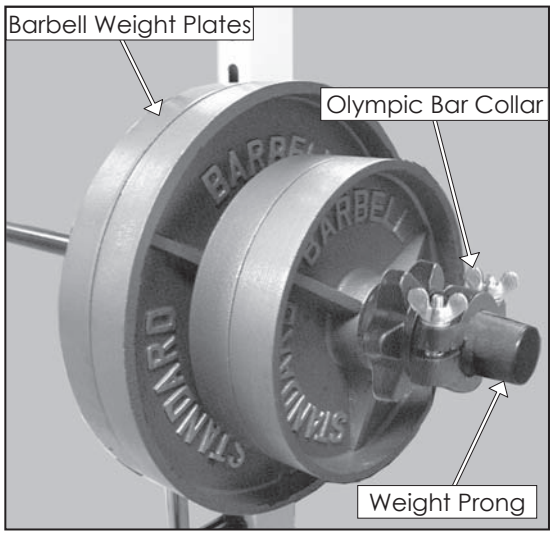

Fig. B ***Warning:*** *Use collars to prevent the weight plates from falling off the **Weight Prongs** .*

3. Pay special attention to the **Safety Stoppers (**CXT-225 Owner's Manual part part #2,#3**).** Be sure they are fully engaged into the **Stopper Prongs (**CXT-225 Owner's Manual part #6**)** of the **Side Frames (**CXT-225 Owner's Manual part #4,#5**).** Refer to **Fig. C** for further illustration.

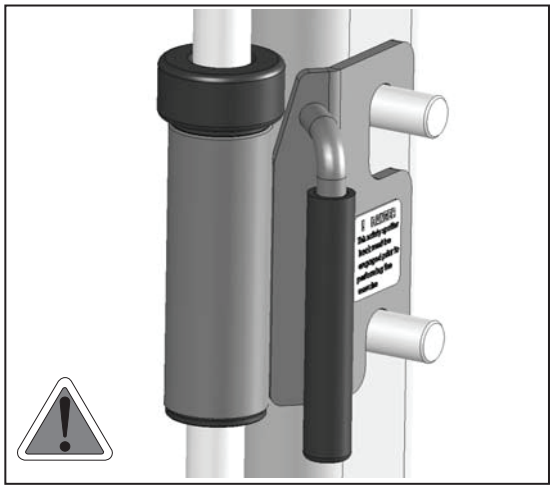

Fig. C ***Danger:*** *Check that all **Safety Stoppers** are fully engaged into the **Stopper Prongs***

Safety Precautions (For CXT-225 option)

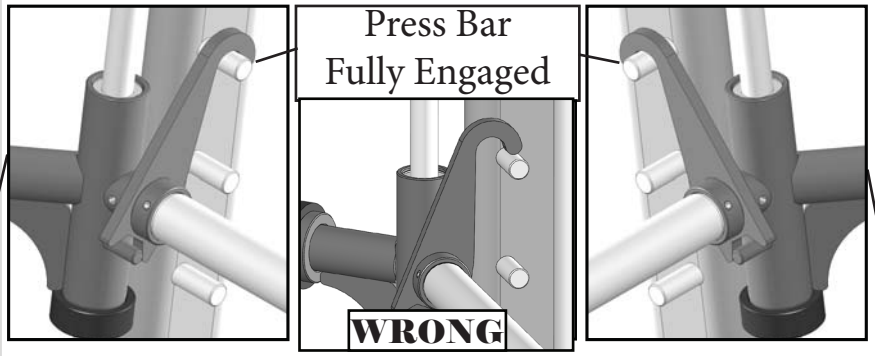

4. DANGER: Once the unit is completely assembled take the time to ensure that the unit is assembled correctly square and perpendicular. Pay special attention to the Weight Lift Bar (#8) making sure both hooks engage uniformly and completely into each Stopper Prong (#6). If both of the Weight Lift Bar Hooks are not engaging uniformly into the Stopper Prongs (#6), it will be necessary to loosen some frame hardware then re-align the frame and re-tighten the hardware. If problem persists, **Do Not Use the Machine** and contact your TuffStuff Retailer or Customer Service (888) 884-8275.

5. The illustrations above depict the Weight Lift Bar (#8) disengaged setting which is used during exercise.

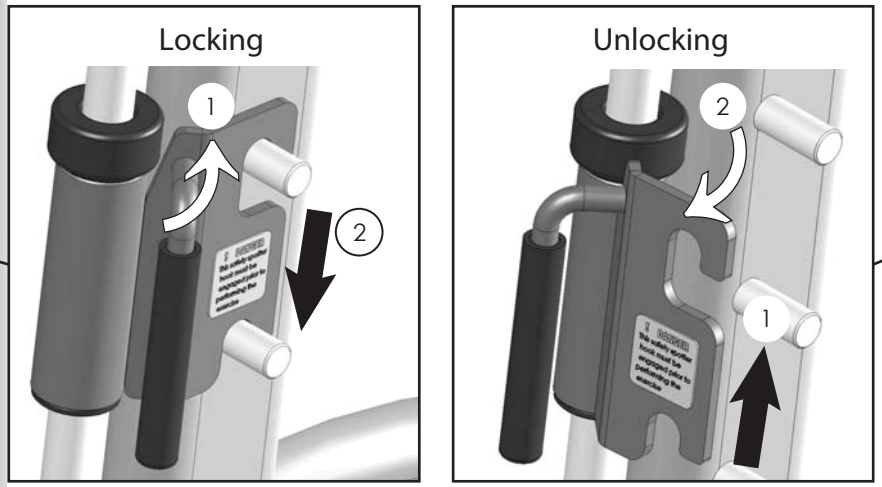

6. DANGER: The Safety Stoppers (#2, #3) prevent the Weight Lift Bar (#8) from being lowered below required point and avoid getting crushed under the Weight Lift Bar (#8) if the weight is too heavy to control. Use the Decal numbers on the Side Frames (#4, #5) to ensure that the Safety Stoppers (#2, #3) are set to an equal adjustment setting (same height).
Before you add weight plates to the Weight Lift Bar (#8), you **must** first set-up the Safety Stoppers (#2, #3) for the required exercise. It is recommended that you test the desired setting without weight plates on the Weight Lift Bar (#8) to make sure the Safety Stoppers (#2, #3) are set to the appropriate exercise setting.

LIGHT COMMERCIAL WARRANTY

TEN (10) Years:	Structural main frames, welds, cams and weight plates.
FIVE (5) Years:	Pivot bearings, pulleys, bushings, guide rods and gas shocks.
ONE (1) Year:	Cables, linear bearings and pull-pin components.
SIX (6) Months:	Upholstery, finish and rubber grips.

All other parts not mentioned elsewhere in the warranty will expire from the date of purchase to the original purchaser.

Light Commercial Use: This equipment is designed for home use and approved by TuffStuff for light commercial use only. Warranty applies to facilities like hotels, apartment complexes, personal training studios, fire & police stations, etc. where the equipment would be used by no more than 30 people per day.

Home Use Only: HOME LIFETIME WARRANTY applies. Lifetime of the equipment while owned by the original purchaser (applies only to defects from manufacturer only).

CONTACT INFORMATION:

TUFFSTUFF FITNESS INTERNATIONAL INC.
13971 Norton Avenue, Chino, CA 91710, USA.
Ph 909-629-1600 Fx 909-629-4967
Email: info@tuffstuff.net
Website: www.tuffstuffitness.com

CUSTOMER SERVICE
Manuel Aguillar: service@tuffstuff.net
Lucia Cuevas: service1@tuffstuff.net
or call 1-888-884-8275

This warranty applies only in the United States to the products manufactured or distributed by TuffStuff Fitness International Inc. under the TUFFSTUFF brand name. TuffStuff warrants to the original purchaser that TuffStuff equipment will be free from defects in material and workmanship. All warranty periods begin to run from the date of purchase to the original purchaser. The warranty and remedies set forth herein are conditioned upon proper storage, installation, use and maintenance, and conformance with any recommendations of TuffStuff. Any damage, failure or loss caused by accident, misuse, neglect or abuse is not covered. This warranty does not cover products not manufactured by TuffStuff, original equipment that are altered, or the use of replacement parts other than TuffStuff genuine parts.

The obligation of TuffStuff under this warranty is limited to repairing or replacing warranted defective parts as TuffStuff may elect, at TuffStuff's facility in Chino, California, without charge to the purchaser. Purchaser is responsible for installation of repaired or replaced parts, and all transportation and insurance costs on returned or replaced equipment to and from TuffStuff's facility in Chino.

THE FOREGOING SHALL CONSTITUTE THE SOLE REMEDY OF THE PURCHASER AND THE SOLE LIABILITY OF TUFFSTUFF WITH REGARD TO WARRANTY, WHETHER EXPRESS OR IMPLIED BY OPERATION OF LAW OR OTHERWISE, INCLUDING BUT NOT LIMITED TO ANY IMPLIED WARRANTIES OF MERCHANTABILITY OR FITNESS. TUFFSTUFF SHALL IN NO EVENT BE LIABLE FOR INCIDENTAL OR CONSEQUENTIAL LOSSES, DAMAGES, OR EXPENSES IN CONNECTIONS WITH EXERCISE PRODUCTS. TUFFSTUFF'S LIABILITY HEREUNDER IS EXPRESSLY LIMITED TO THE REPAIRS OR REPLACEMENTS OF WARRANTED DEFECTIVE PARTS.

This written warranty is the final, complete and exclusive agreement of the parties with respect to the quality or performance of the equipment and no action for breach of this written warranty or any implied warranty shall be commenced more than one (1) year after the accrual of the cause of action. No modification of this warranty or waiver of its terms shall be binding on either party unless approved in writing by an authorized representative of the party. Contact TuffStuff Fitness International, Inc. at 13971 Norton Avenue, Chino, CA 91710, before returning any defective equipment.

This warranty gives you specific legal rights and you may also have other rights, which may vary from state to state.

SERIAL # _____

Write your Serial number here for future reference

_____

Purchase Date