TUFFSTUFF FITNESS INTERNATIONAL

OWNER'S MANUAL

Maintenance & Assembly Instructions

IMPORTANT: KEEP THIS MANUAL FOR FUTURE REFERENCE

*Shown with AXT-225 Deluxe Home Gym
(Sold separately)

⚠ WARNING

Read and understand the Owner's Manual, all danger, warning and caution labels before using this equipment.

SXT-LP

Leg Press Option for XT Gym Series

SXT-LP_Rev1
Revision Date 2-14-2018

Table of Contents

OVERHEAD SPECIFICATIONS ..... Page 3
DANGER, WARNING, & CAUTION LABELS INFORMATION ..... Page 4-9
IMPORTANT SAFETY INSTRUCTIONS ..... Page 10
REGISTRATION, SERVICE & ASSEMBLY ..... Page 11
INSPECTION/MAINTENANCE ..... Page 12
CABLE INSPECTION ..... Page 13
STEP 1 SXT-LP+AXT-225 ..... Page 14
STEP 1 SXT-LP+SXT-550 ..... Page 15
STEP 2-5 ..... Page 16-19
STEP 6 SXT-LP+AXT-225 CABLE ROUTING ..... Page 20-21
STEP 6 SXT-LP+SXT-550 CABLE ROUTING ..... Page 22-23
STEP 7-9 ..... Page 24-26
PARTS LIST ..... Page 27
PRE ASSEMBLED COMPONENTS ..... Page 28-29
RAIL WHEEL MAINTENANCE
- RAIL WHEEL REPLACEMENT STEPS ..... Page 30-31
- RAIL WHEEL ADJUSTMENT ..... Page 32-33

BASIC EXERCISE GUIDE ..... Page 34
NOTES ..... Page 35
WARRANTY ..... Page 36

TuffStuff Fitness International Inc. continually engages in research related to product improvements. Please take the time to carefully read through this owner's manual thoroughly. Instructions contained in this owner's manual are not intended to cover all details or variations possible with equipment, or to cover every contingency that may be met in conjunction with assembly, installation, operation, maintenance or troubleshooting of the equipment. Even though we have prepared this owner's manual with extreme care, neither the manufacturer nor the author can accept responsibility for any errors in, or omission from, the information given. Should additional information be required, or should situations arise that are not covered by this owner's manual, the matter should be directed to Customer Service at TuffStuff Fitness International Inc. in Chino, California.

OVERHEAD SPECIFICATIONS

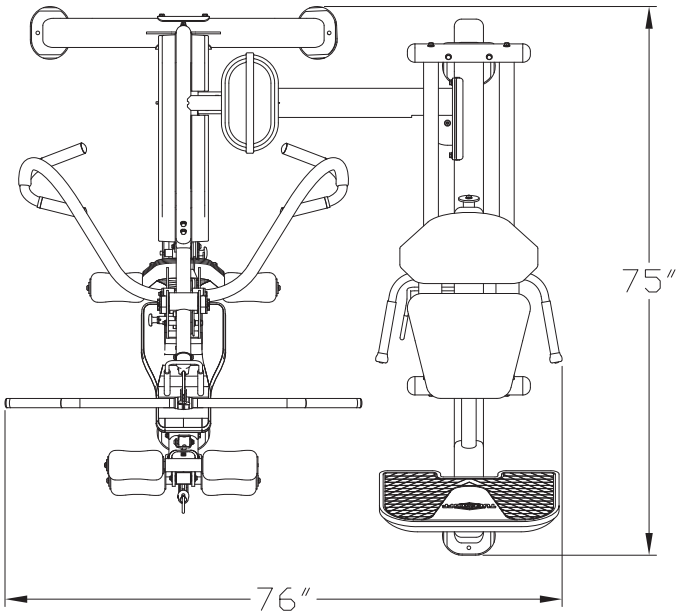

SXT-LP+AXT-225 L 75″ X W 76″ X H 84″
PRODUCT WEIGHT 196 lbs.
MAX-LOAD WEIGHT LIMIT - 200 lbs.

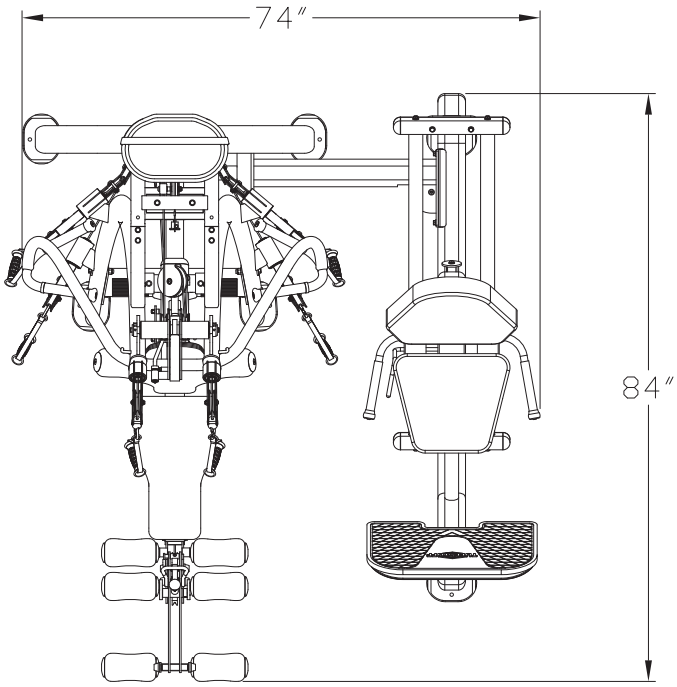

SXT-LP+SXT-550 L 84″ X W 74″ X H 84″
PRODUCT WEIGHT 196 lbs.
MAX-LOAD WEIGHT LIMIT - 200 lbs.

Carefully read ALL Danger, Warning & Caution labels posted on the machine

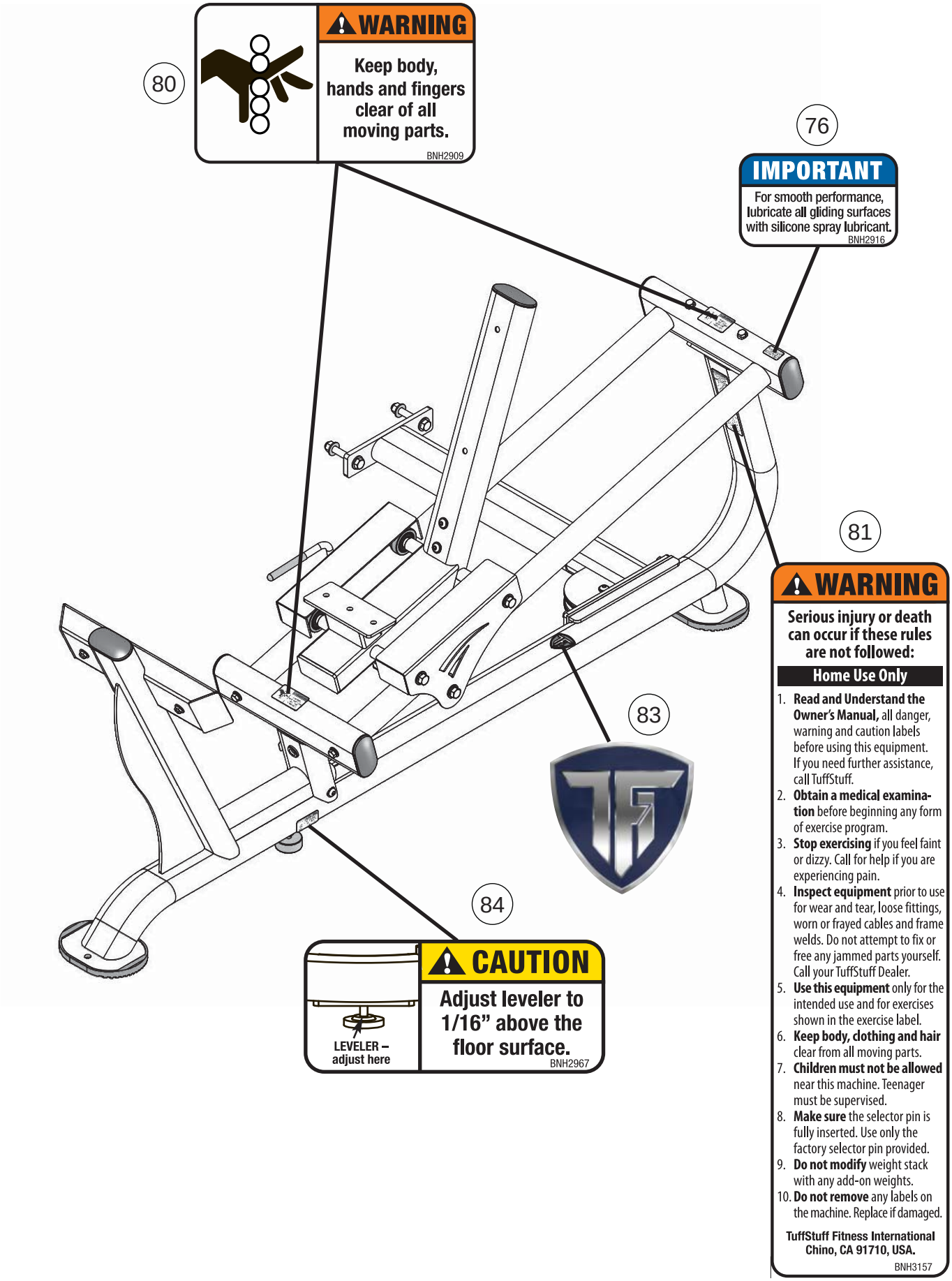

Carefully read ALL Danger, Warning & Caution labels posted on the machine

82

WARRANTY

HOME LIFETIME*

For the **LIFE** of the product while owned by the original purchaser from defects in material and workmanship.

***This warranty does not cover:**

1. TuffStuff products sold for and used in a commercial or institutional environment.
2. Any misuse, neglect, abuse, improper assembly & maintenance, or failure to follow instructions or warnings in the Owner's Manual and warning labels posted on the machines.
3. Use of this apparatus in a manner for which it was not designed.
4. Original product that is altered, or the use of replacement parts and components parts of another manufacturer other than TuffStuff.

All warranty periods begin to run from the date of purchase to the original purchaser. The obligation of TuffStuff under this warranty is limited to repairing or replacing warranted defective parts, as TuffStuff may elect, at TuffStuff's facility in Chino, California, without charge to the Purchaser for either parts or labor. Purchaser is responsible for installation of repaired or replaced parts, and all transportation and insurance costs to and from TuffStuff's facility in Chino. For a detailed copy of the warranty, please contact:

TuffStuff Fitness International
Chino, CA 91710, USA
www.tuffstuffitness.com

BNH3156

77

INSPECTIONS

Home Use Only Recommended Inspection	DAILY	WEEKLY	MONTHLY	6-MONTH
INSPECT: Links, pull-pins, snap locks, swivels, connectors, selector pin, and welded-joints.	X			
CLEAN: Upholstery with lanolin-base cleaner. Do not use Windex.	X			
INSPECT: Cables and tension (adjust if needed).	X			
INSPECT: All labels		X		
INSPECT: All nuts and bolts (tighten if needed).		X		
INSPECT: Accessory bars, handles, rubber grips.		X		
INSPECT: All anti-skid surfaces.		X		
CLEAN & LUBRICATE: Clean guide rods with Super Lube® spray lubricant and lubricate with Super Lube® (PTFE) grease.			X	
LUBRICATE: Seat sleeves, pull-pin sliding mechanism, bushings and linear bearings.			X	
CLEAN & WAX: All powder-coat finishes.				X

Use only genuine TuffStuff replacement parts. Failure to do so will void warranty and could result in serious injury or death.

TuffStuff Fitness International
Chino, CA 91710, USA
www.tuffstuffitness.com

BNH3155

74

DANGER

Use this equipment ONLY for its intended purpose.

If you are unfamiliar with the equipment or procedure, refer to your Owner's Manual or call TuffStuff at 888-884-8275.

Failure to comply could result in serious injury or death.

BNH2903

83

76

IMPORTANT

For smooth performance, lubricate all gliding surfaces with silicone spray lubricant.

BNH2916

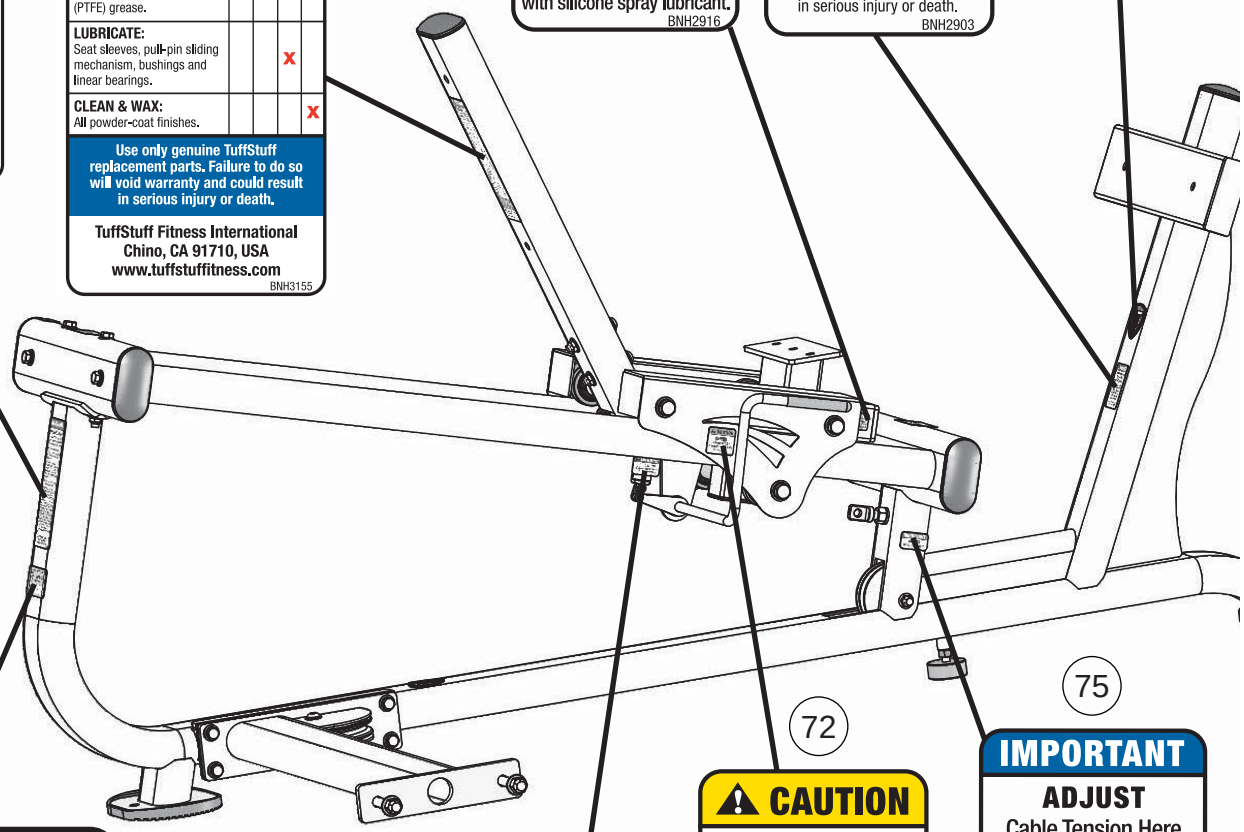

75

IMPORTANT

ADJUST
Cable Tension Here

BNH2924

72

CAUTION

CHECK
Pull-pin is fully engaged in the hole before use.

BNH2912

79

TUFFSTUFF FITNESS INTERNATIONAL, INC.
1-888-884-8275
www.tuffstuffitness.com

MODEL
SERIAL #

BNH3147

DANGER

TIGHTEN this retaining nut before use.

BNH3146

73

Carefully read ALL Danger, Warning & Caution labels posted on the machine

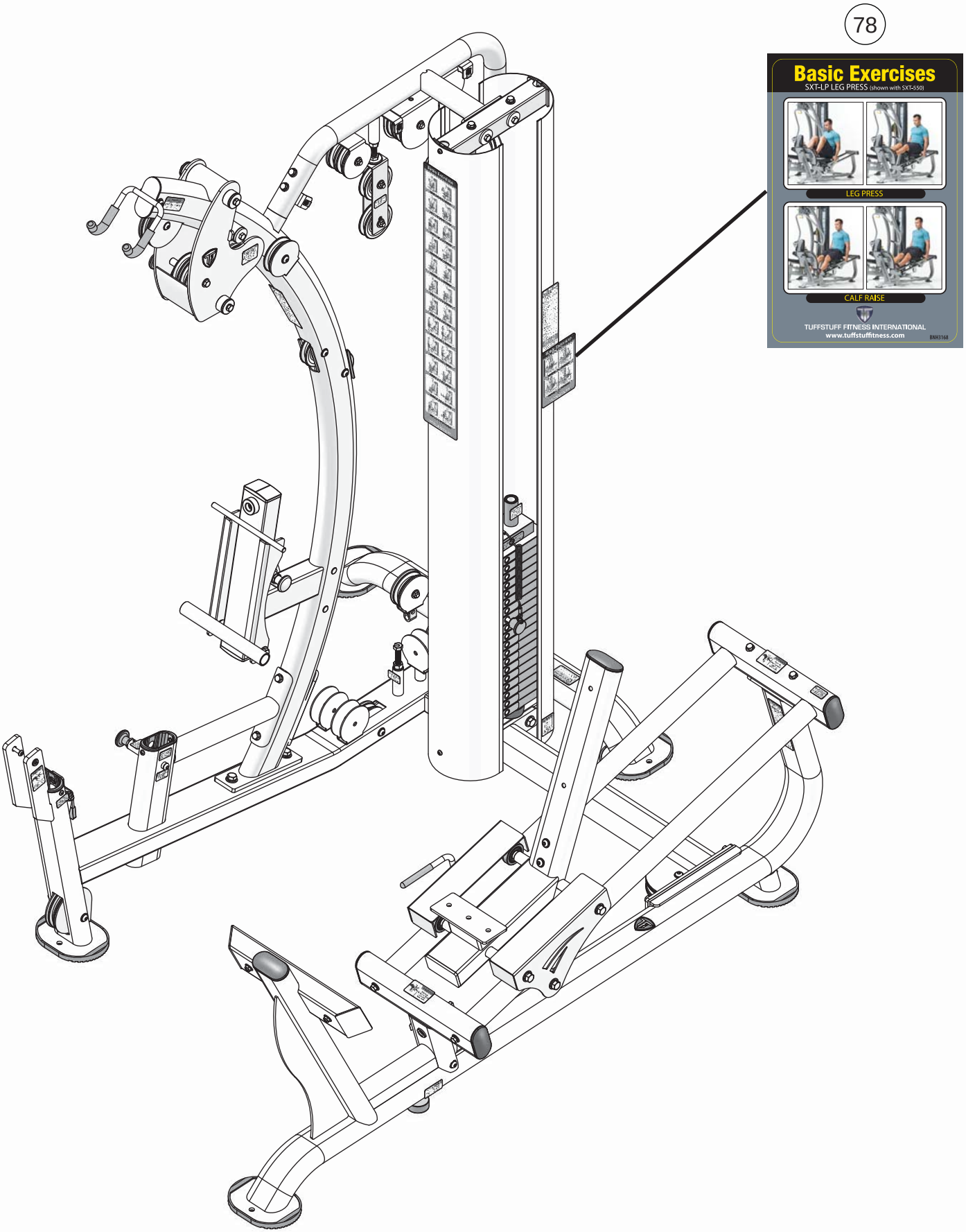

Carefully read ALL Danger, Warning & Caution labels posted on the machine

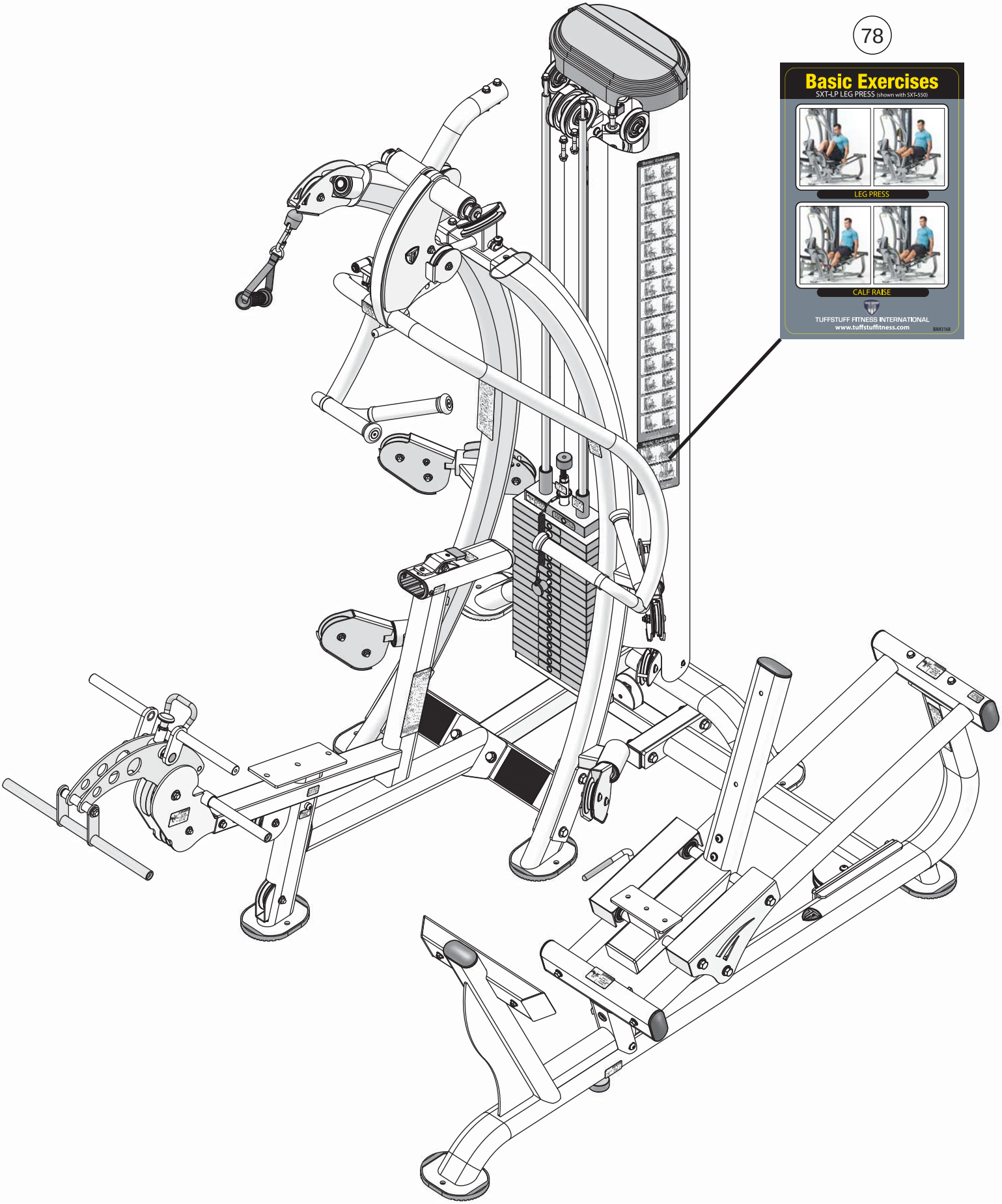

82

WARRANTY

HOME LIFETIME*

For the **LIFE** of the product while owned by the original purchaser from defects in material and workmanship.

***This warranty does not cover:**

1. TuffStuff products sold for and used in a commercial or institutional environment.
2. Any misuse, neglect, abuse, improper assembly & maintenance, or failure to follow instructions or warnings in the Owner's Manual and warning labels posted on the machines.
3. Use of this apparatus in a manner for which it was not designed.
4. Original product that is altered, or the use of replacement parts and components parts of another manufacturer other than TuffStuff.

All warranty periods begin to run from the date of purchase to the original purchaser. The obligation of TuffStuff under this warranty is limited to repairing or replacing warranted defective parts, as TuffStuff may elect, at TuffStuff's facility in Chino, California, without charge to the Purchaser for either parts or labor. Purchaser is responsible for installation of repaired or replaced parts, and all transportation and insurance costs to and from TuffStuff's facility in Chino.
For a detailed copy of the warranty, please contact:

TuffStuff Fitness International
Chino, CA 91710, USA
www.tuffstuffitness.com

BNH3156

81

⚠ WARNING

Serious injury or death can occur if these rules are not followed:

Home Use Only

1. **Read and Understand the Owner's Manual,** all danger, warning and caution labels before using this equipment. If you need further assistance, call TuffStuff.
2. **Obtain a medical examination** before beginning any form of exercise program.
3. **Stop exercising** if you feel faint or dizzy. Call for help if you are experiencing pain.
4. **Inspect equipment** prior to use for wear and tear, loose fittings, worn or frayed cables and frame welds. Do not attempt to fix or free any jammed parts yourself. Call your TuffStuff Dealer.
5. **Use this equipment** only for the intended use and for exercises shown in the exercise label.
6. **Keep body, clothing and hair** clear from all moving parts.
7. **Children must not be allowed** near this machine. Teenager must be supervised.
8. **Make sure** the selector pin is fully inserted. Use only the factory selector pin provided.
9. **Do not modify** weight stack with any add-on weights.
10. **Do not remove** any labels on the machine. Replace if damaged.

TuffStuff Fitness International
Chino, CA 91710, USA.

BNH3157

77

INSPECTIONS

Home Use Only Recommended Inspection	DAILY	WEEKLY	MONTHLY	6-MONTH
INSPECT: Links, pull-pins, snap locks, swivels, connectors, selector pin, and welded-joints.	X			
CLEAN: Upholstery with lanolin-base cleaner. Do not use Windex.	X			
INSPECT: Cables and tension (adjust if needed).	X			
INSPECT: All labels		X		
INSPECT: All nuts and bolts (tighten if needed).		X		
INSPECT: Accessory bars, handles, rubber grips.		X		
INSPECT: All anti-skid surfaces.		X		
CLEAN & LUBRICATE: Clean guide rods with Super Lube® spray lubricant and lubricate with Super Lube® (PTFE) grease.			X	
LUBRICATE: Seat sleeves, pull-pin sliding mechanism, bushings and linear bearings.			X	
CLEAN & WAX: All powder-coat finishes.				X

Use only genuine TuffStuff replacement parts. Failure to do so will void warranty and could result in serious injury or death.

TuffStuff Fitness International
Chino, CA 91710, USA
www.tuffstuffitness.com

BNH3155

75

IMPORTANT

ADJUST
Cable Tension Here

BNH2924

76

IMPORTANT

For smooth performance, lubricate all gliding surfaces with silicone spray lubricant.

BNH2916

74

⚠ DANGER

Use this equipment ONLY for its intended purpose.

If you are unfamiliar with the equipment or procedure, refer to your Owner's Manual or call TuffStuff at 888-884-8275.

Failure to comply could result in serious injury or death.

BNH2903

73

⚠ DANGER

TIGHTEN this retaining nut before use.

BNH3146

72

⚠ CAUTION

CHECK
Pull-pin is fully engaged in the hole before use.

BNH2912

84

⚠ CAUTION

Adjust leveler to 1/16" above the floor surface.

BNH2967

78

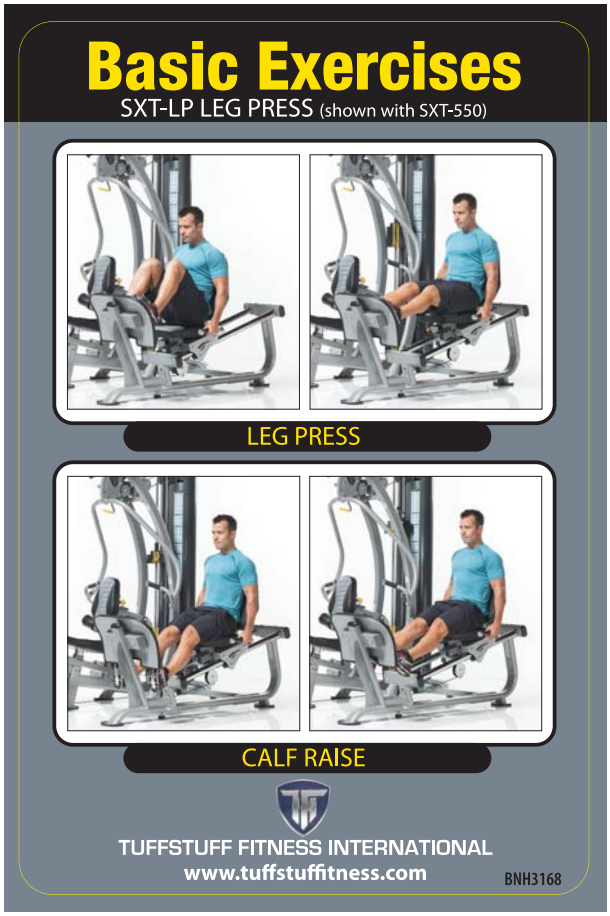

79

80

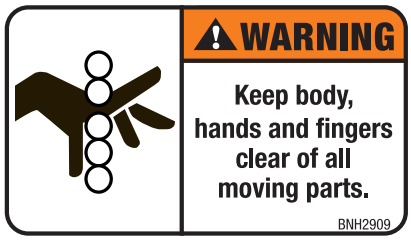

83

24

BE ALERT!

THE FITNESS EQUIPMENT YOU HAVE JUST PURCHASED PRESENTS HAZARDS WHICH, IF NOT AVOIDED, COULD CAUSE SERIOUS INJURY OR DEATH.

Prior to using the equipment, READ the OWNER'S MANUAL thoroughly, all danger, warning & caution labels and instruction placards affixed to the machine.

If you are unsure on how to use the equipment, seek the assistance of a certified training instructor, TuffStuff authorized dealer or TuffStuff customer service personnel.

Immediately report any piece of equipment that is not functioning properly. DO NOT ATTEMPT to use or fix any piece of equipment yourself. Contact TuffStuff immediately.

ASTM F1749-96 TUFFSTUFF FITNESS INTERNATIONAL, CHINO, CA 91710

BNH3139

It is extremely important that the **BE ALERT! Sign** shown to the left be installed in plain view of the unit.

You should have received it along with this Owner's Manual. If you did not receive this Sign with your order, you can obtain one at no cost to you from TuffStuff Fitness by contacting our service department at:

1 (888) 884-8275
service@tuffstuff.net
service1@tuffstuff.net

Important Safety Instructions

If you have not participated in a regular exercise program, smoke or have signs of high blood pressure, you must obtain a medical exam or consult with your personal physician before performing any SXT-LP exercises illustrated in this manual.

⚠ WARNING SERIOUS INJURY OR DEATH CAN OCCUR IF THESE SAFETY PRECAUTIONS ARE NOT OBSERVED:

1. **Read and understand Owner's Manual** and all Danger, Warning and Caution labels before using this equipment. If you still need help, call TuffStuff Fitness International.
2. Inspect the equipment before each use for wear and tear, loose fittings, worn or frayed cables and frame welds. DO NOT USE if it appears to be inoperable or damaged.
3. Stop exercising if you feel faint or dizzy. Call your doctor immediately if you are experiencing pain.
4. Use this equipment only for the intended use and for exercise(s) shown on page 34.
5. Keep body, clothing and hair clear from all moving parts. Do not attempt to free any jammed parts by yourself.
6. Do not lean against or pull on the framework, weight stack or any component, whether the machine is in use or at rest.
7. Do not use accessories or accessory attachments that are not recommended by TuffStuff.
8. Children must not be allowed near the equipment. Teenager must be supervised.
9. Make sure selector pin is completely inserted and never pin the weights in an elevated position. Use only the selector pin provided by the manufacturer.
10. Do not remove any decals affixed to the machine. Replace if damaged.
11. Do not alter or modify the original manufacturer's 200 lbs. weight stack with any add-on incremental weights, weight plates or dumbbells except those with standard factory installed option.
12. Perform regular maintenance (see INSPECTION Label). Pay special attention to areas most susceptible to wear and tear, including but not limited to cables, pulleys and rubber grips.
13. Replace immediately all parts at first sign of wear or damage. Use only genuine TuffStuff replacement parts. Failure to do so will void warranty and could result in serious injury or death to you.

Training Safety

1. Always warm-up before and cool-down after weight training. Warm-up for 10-15 minutes with stretching and cardiovascular exercises. Cool-down should include light stretching exercises for 5-15 minutes.
2. Never hold your breath – will limit the flow of oxygen to your brain and may cause dizziness. The most often used breathing pattern is inhaling during least resistance and exhaling during maximum resistance.
3. Always choose a light resistance when using the machine the first time.
4. Trained at a controlled rate of speed

⚠ DANGER

DANGER: indicates an imminently hazardous situation which, if not avoided, will result in death or serious injury.

⚠ WARNING

WARNING: indicates a potentially hazardous situation which, if not avoided, will result in death or serious injury.

⚠ CAUTION

CAUTION: indicates a hazardous situation which, if not avoided, could result in minor or moderate injury.

Registration, Service & Assembly

Thank you for purchasing the SXT-LP Leg Press Option for XT Gym Series. This machine is part of the TuffStuff line of quality strength training equipment. To maximize your use of the equipment, please study the Owner's Manual thoroughly.

Registration

To avoid unnecessary delays on warranty parts and to insure that a permanent record of your purchase is on file with our company, be sure to register online at http://www.tuffstuffitness.com or mail to address shown below within 10 days of purchase.

Obtaining Service

Please use this Owner's Manual as your guide to all parts included in your shipment. When ordering parts, you must specify the part number and description from this owner's manual. **Use only genuine TuffStuff replacement parts when servicing the equipment.** Failure to do so will void warranty and could result in serious injury or death.

For information about product operation or service:

Phone:	909-629-1600 Toll Free 888-884-8275
Fax:	909-629-4967
E-mail:	service@tuffstuff.net or service1@tuffstuff.net
Hours:	M–F 8:00 – 4:30 PST
Or write to:	TuffStuff Fitness International Inc. Customer Service 13971 Norton Avenue, Chino, CA 91710

Retain this Owner's Manual for future reference when ordering service or parts. To assist you better, please be prepared to provide the following information:

1. Model Number **2. Place of Purchase**
3. Serial Number **4. Part # and Description**

Required Tools

The basic tools that you will need to assemble the SXT-LP but are not limited to:

- 9/16", 3/4", 1/2" combination wrenches
- Adjustable wrench
- Ratchet wrench with 9/16", 3/4", 1/2" sockets
- External retaining ring pliers
- Rubber mallet, measuring tape & utility knife
- Super Lube® spray lubricant and grease
- Windex or household glass cleaner

Assembly Requirements

Follow these installation requirements when assembling the SXT-LP. Use the overhead view on the Content Page to layout your floor plan before assembling.

Set up the SXT-LP on a clean, solid, flat surface. A smooth, flat surface under the machine helps keep it level.

Allow ample space around the machine for safe unrestricted use and easier access.

Insert all bolts in the same direction. For aesthetic appearance, insert all bolts in the same direction unless specified (in text or illustration) to do otherwise.

Leave room for adjustments. Do not fully tighten fasteners until instructed in the assembly steps to do so (to prevent any difficulty with alignment of parts during the assembly process). When not instructed, tighten fasteners such as bolts, nuts and screws so the unit is stable, but leave room for adjustments.

Assembly Tips

Read all "Notes" on each page before beginning each step.

While you may be able to assemble the SXT-LP using the illustrations only, IMPORTANT safety notes and other tips are included in the text.

Some pieces may have extra holes that you will not use. Use only those holes indicated in the instructions and illustration.

NOTE: With so many assembled parts, proper alignment and adjustment is critical. While tightening the nuts and bolts, be sure to leave room for final adjustments.

CAUTION: Obtain assistance from TFI if you have difficulty assembling the SXT-LP. Please do not attempt to complete the assembly as this could result in equipment failure and serious injuries to the users.

Symbols & Description

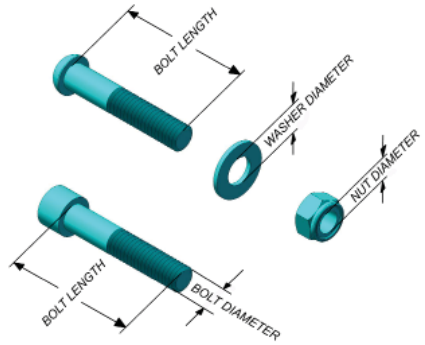

70%

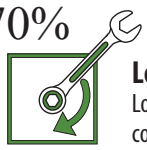

Loosely Fasten
Loosely tighten all hardware in this step. DO NOT fully tighten. Some component(s) may need pre-assembly and or alignment during the assembly process.

100%

Fully Fasten
Wrench tighten all hardware in this step.

Inspection/Maintenance

Perform regular maintenance (see Inspection Label). Pay special attention to areas most susceptible to wear and tear, including but not limited to cables, pulleys and rubber grip. TFI recommends you maintain a service contract with a TFI Authorized Dealer or a Professional Service Company approved by TFI. Keep a service log of all maintenance and repair activities. Extra copies can be downloaded from our website www.tuffstuffitness.com

INSPECTIONS

Home Use Only Recommended Inspection	DAILY	WEEKLY	MONTHLY	6-MONTH
INSPECT: Links, pull-pins, snap locks, swivels, connectors, selector pin, and welded-joints.	X			
CLEAN: Upholstery with lanolin-base cleaner. Do not use Windex.	X			
INSPECT: Cables and tension (adjust if needed).	X			
INSPECT: All labels		X		
INSPECT: All nuts and bolts (tighten if needed).		X		
INSPECT: Accessory bars, handles, rubber grips.		X		
INSPECT: All anti-skid surfaces.		X		
CLEAN & LUBRICATE: Clean guide rods with Super Lube® spray lubricant and lubricate with Super Lube® (PTFE) grease.			X	
LUBRICATE: Seat sleeves, pull-pin sliding mechanism, bushings and linear bearings.			X	
CLEAN & WAX: All powder-coat finishes.				X

Use only genuine TuffStuff replacement parts. Failure to do so will void warranty and could result in serious injury or death.

TuffStuff Fitness International
Chino, CA 91710, USA
www.tuffstuffitness.com

BNH3155

INSPECTION / MAINTENANCE RECORDS

DATE	REPLACEMENT	REPAIRS	INSPECTED BY

WARRANTY REPAIRS

DATE	REPLACEMENT	REPAIRS	INSPECTED BY

Cable Inspection

WARNING:

THE FOLLOWING CONDITIONS MAY INDICATE A WORN CABLE. REPLACE IMMEDIATELY.

"NECKING", STRETCHED CABLE COVERING

A CRACK IN THE CABLE COVER

A TEAR IN THE CABLE COVER

A BREAK ON THE CABLE

CABLE END SLIPPING OUT

IMPORTANT NOTE:

DAMAGED OR WORN CABLE (AS SHOWN ABOVE) MAY DAMAGE THE PULLEY(S). YOU MUST INSPECT THE PULLEYS AT THIS TIME FOR WEAR AND TEAR. REPLACE IF NEEDED.

Step 1 SXT-LP+AXT-225

NOTE:

1. It is strongly recommended that two people participate in the assembly of this unit.
2. Some parts not shown for clarity.
3. If AXT-225 unit was previously assembled, it may be necessary to remove the AXT-225 weight shields.

Step 1 Assembly List

Item #	Description	Qty.
5	**CROSS BRACE**	**1**
31	FLAT WASHER SAE Z/P 1/2"	4
37	HEX HEAD CAP SCREW GR-5 Z/P 1/2-13 X 3 1/4	2
65	NYLON INSERT LOCK NUT Z/P 1/2-13	2

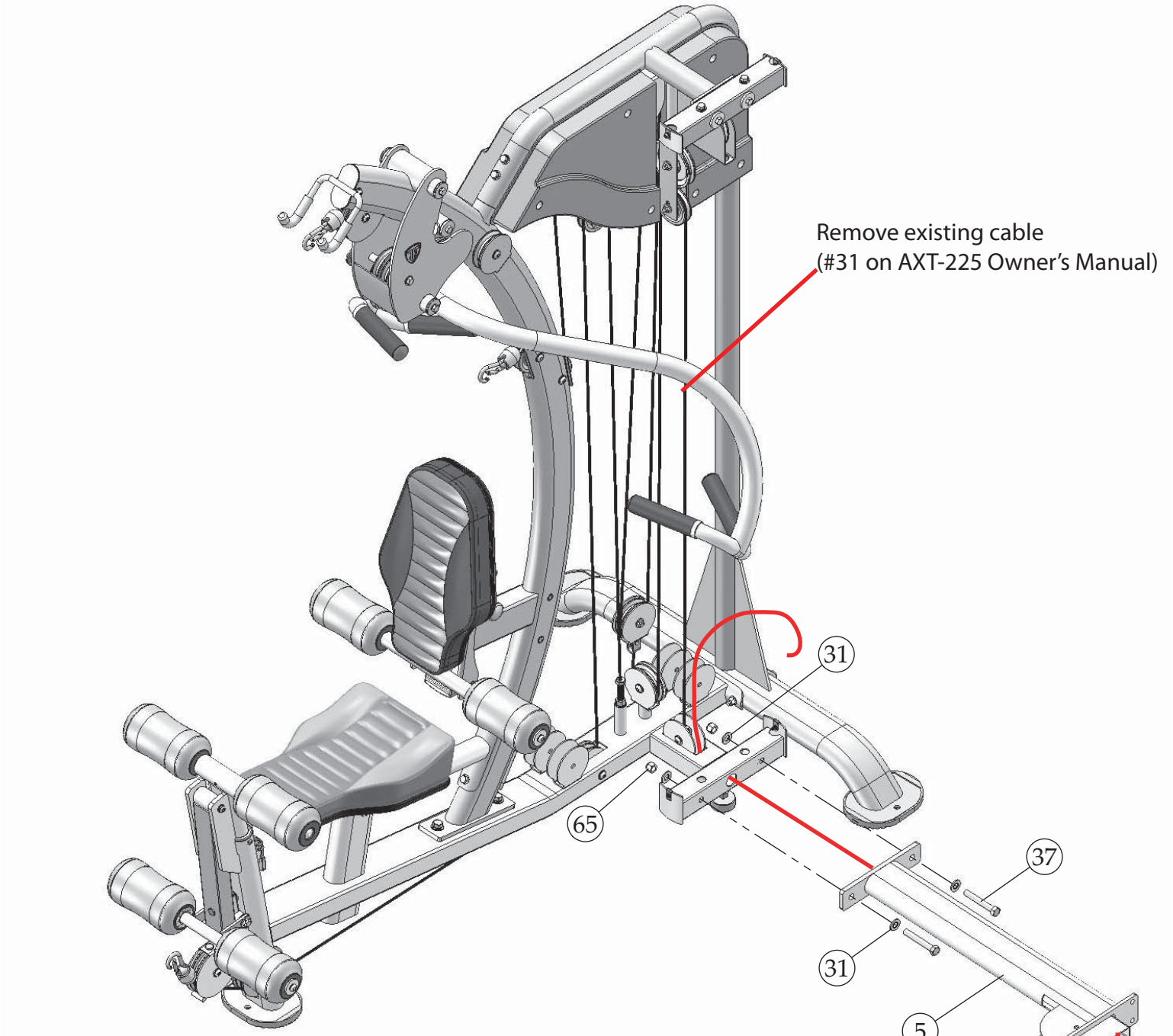

Loosely Tighten

70%

Loosely Tighten

Loosely tighten all hardware in this step.

NOTE:
Wire string will be used to guide the cable on step 6. Do not remove.

Step 1 SXT-LP+SXT-550

Step 1 Assembly List		
Item #	**Description**	**Qty.**
5	**CROSS BRACE**	**1**
31	FLAT WASHER SAE Z/P 1/2”	4
37	HEX HEAD CAP SCREW GR-5 Z/P 1/2-13 X 3 1/4	2
65	NYLON INSERT LOCK NUT Z/P 1/2-13	2

NOTE:

1. It is strongly recommended that two people participate in the assembly of this unit.

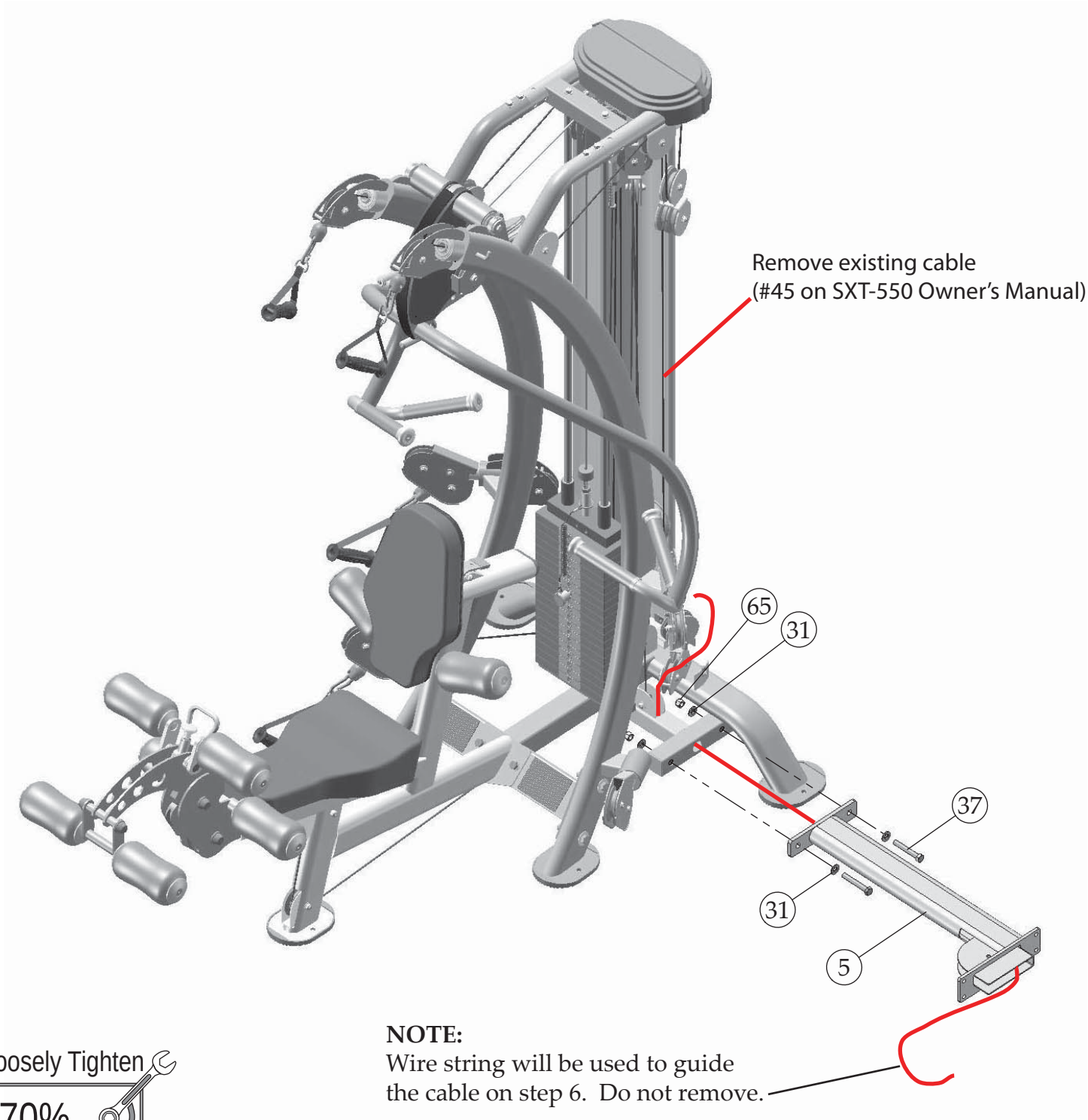

NOTE:
Wire string will be used to guide the cable on step 6. Do not remove.

Loosely Tighten

70%

Loosely Tighten
Loosely tighten all hardware in this step.

Step 2

Step 2 Assembly List		
Item #	**Description**	**Qty.**
5	**CROSS BRACE**	**1**
***10**	**MAIN FRAME**	**1**
32	FLAT WASHER SAE Z/P 3/8”	4
36	HEX HEAD CAP SCREW GR-5 Z/P 3/8-16 X 1	4
57	SPLIT LOCK WASHER Z/P 3/8”	4

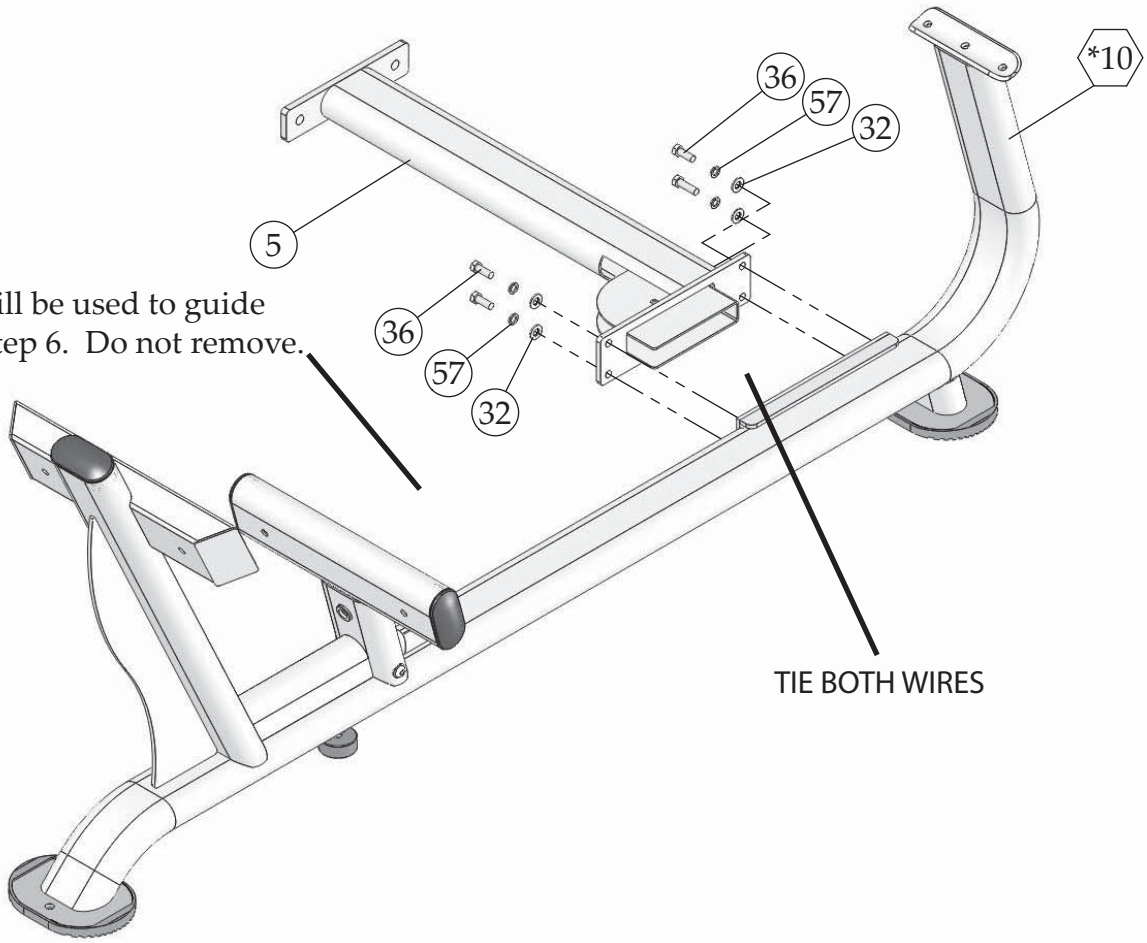

NOTE
Wire string will be used to guide the cable on step 6. Do not remove.

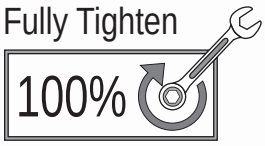

Fully Tighten
Wrench tighten all hardware in this and previous loosely tighten steps.

Step 3

Step 3 Assembly List		
Item #	Description	Qty.
*4	CARRIAGE	1
9	LINEAR SHAFT	2

Note:
1. Slide linear shaft into carriage.

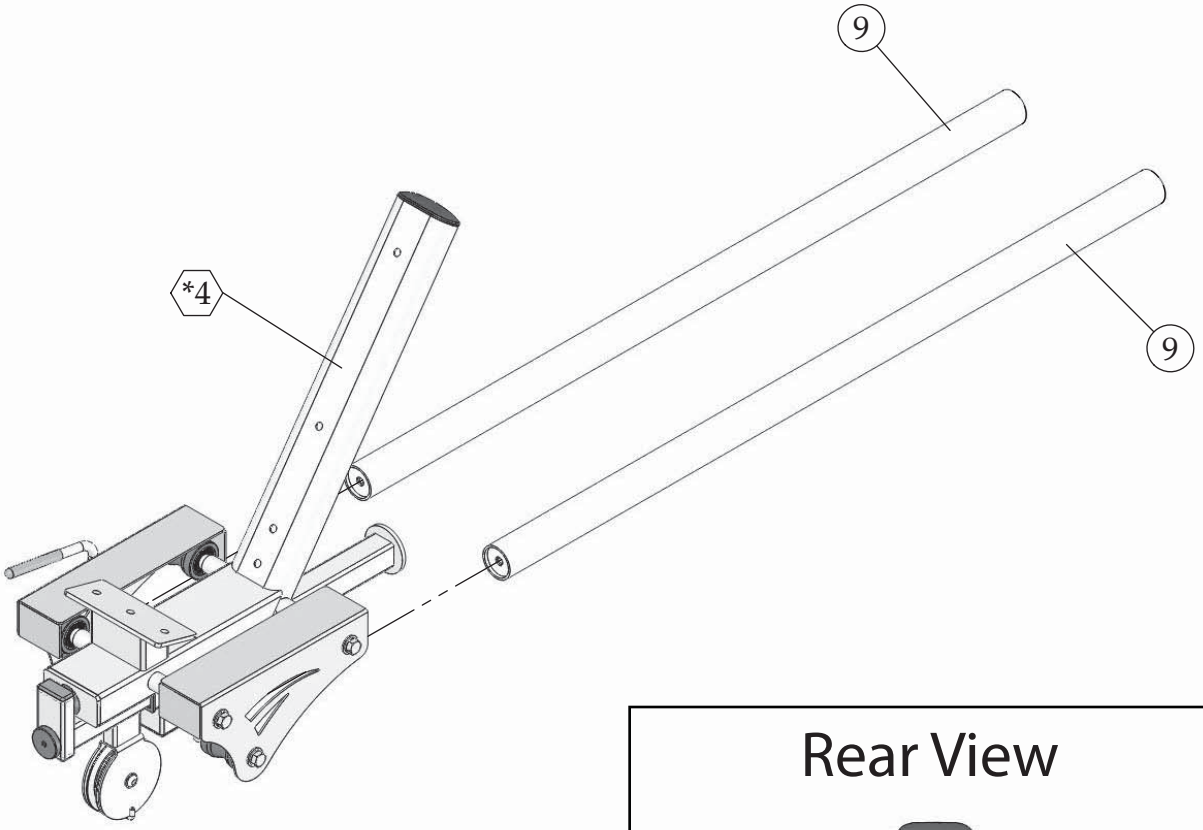

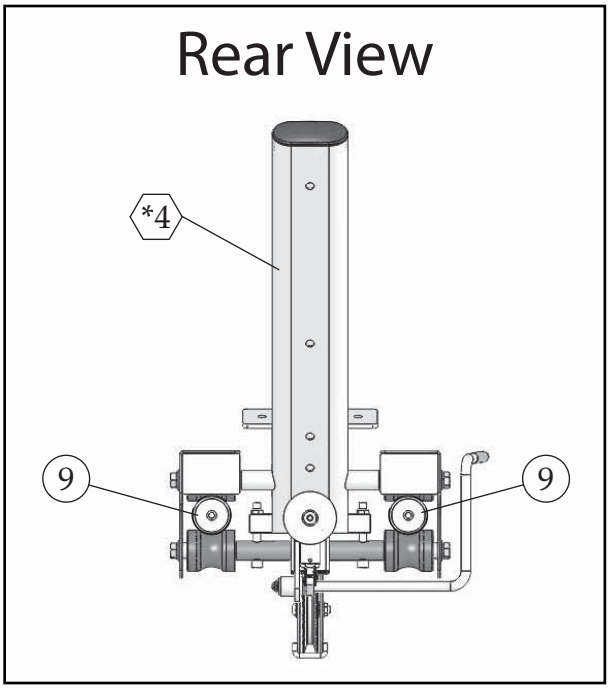

Loosely Tighten

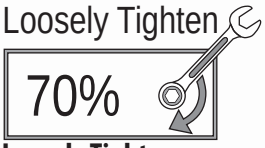

Loosely Tighten
Loosely tighten all hardware in this step.

Step 4

Step 3 Assembly List		
Item #	**Description**	**Qty.**
***4**	**CARRIAGE**	**1**
9	**LINEAR SHAFT**	**2**
28	HEX HEAD CAP SCREW GR-5 Z/P 3/8-16 X 1 1/4	2
57	SPLIT LOCK WASHER Z/P 3/8”	2
60	FLAT WASHER Z/P 3/8 ID X 1 1/2 OD X 3/16	2

NOTE:

1. Two people required for this step.

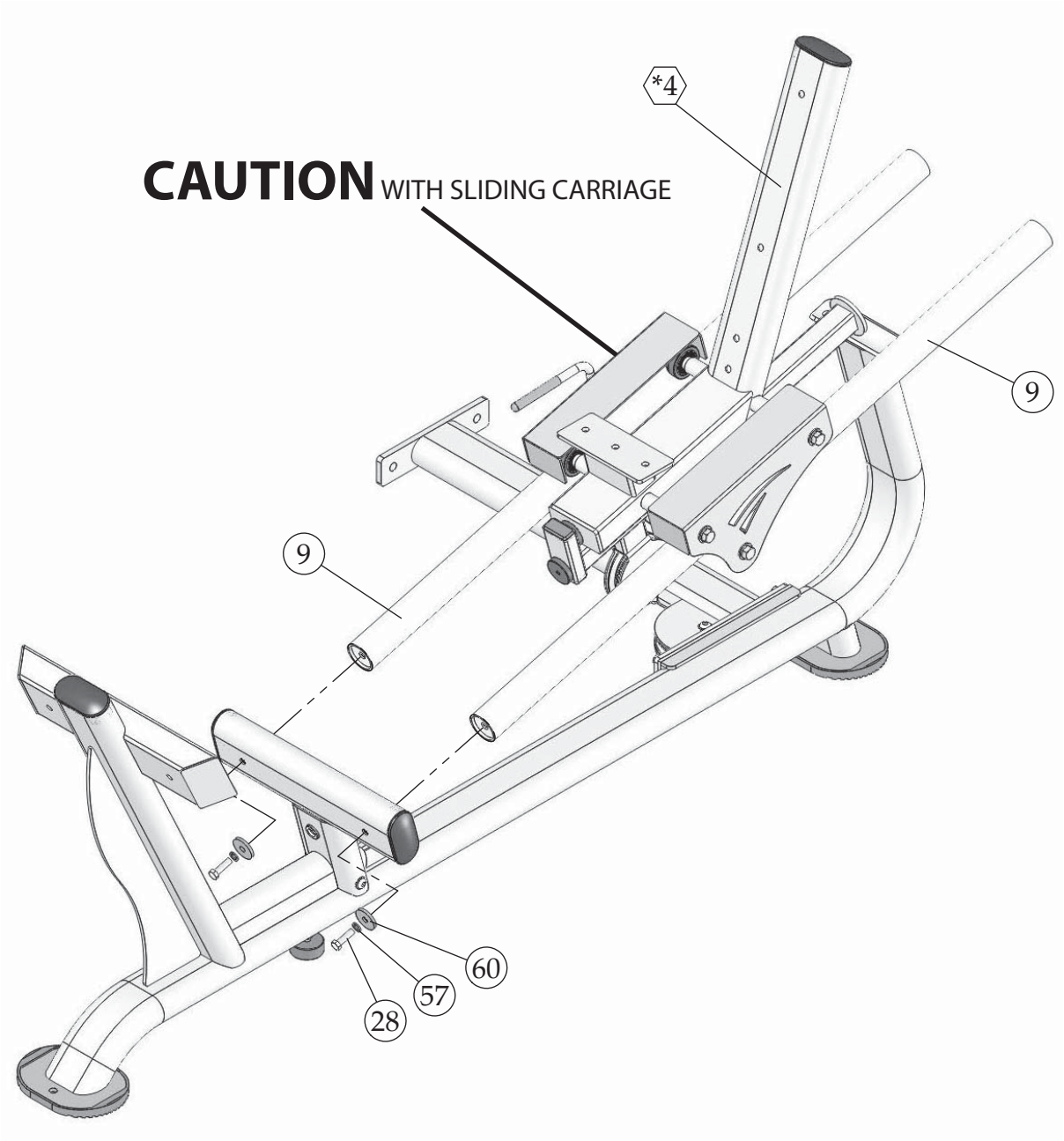

Step 5

Step 5 Assembly List		
Item #	**Description**	**Qty.**
***8**	**LINEAR SHAFT HOUSING**	**1**
28	HEX HEAD CAP SCREW GR-5 Z/P 3/8-16 X 1 1/4	2
38	HEX HEAD CAP SCREW GR-5 Z/P 3/8-16 X 4 3/4	2
42	NYLON INSERT THIN PATTERN LOCK NUT Z/P 3/8-16	2
57	SPLIT LOCK WASHER Z/P 3/8”	2
60	FLAT WASHER Z/P 3/8 ID X 1 1/2 OD X 3/16	2
62	OVAL WASHER Z/P 3/8”	4

Note:

1. Refer to pages 32-33 for Rail Wheel Adjustment

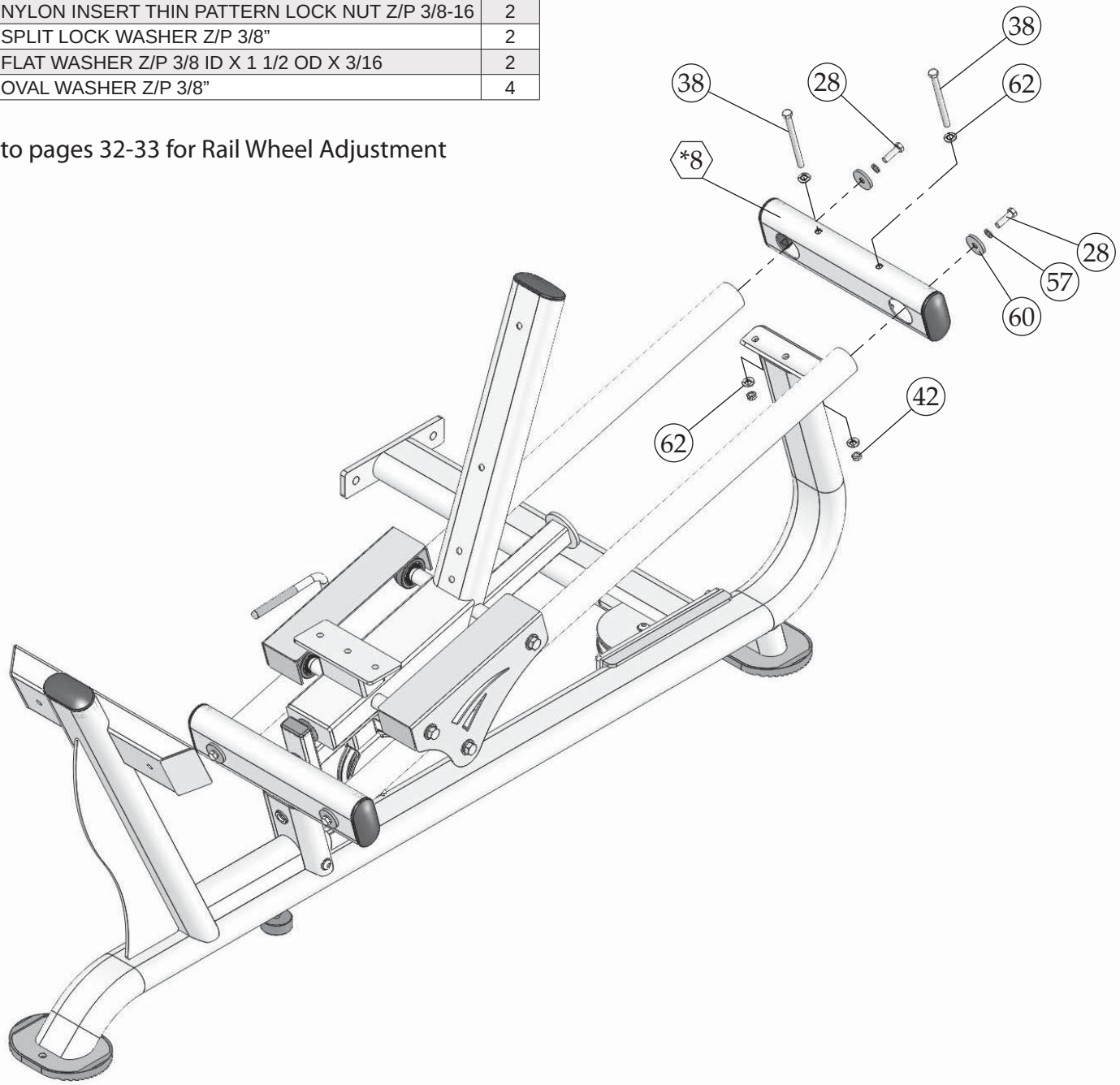

Fully Tighten

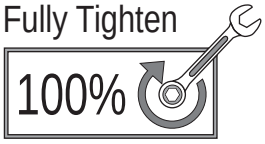

Fully Tighten
Wrench tighten all hardware in this and previous loosely tighten steps.

Step 6 SXT-LP+AXT-225 Cable Routing

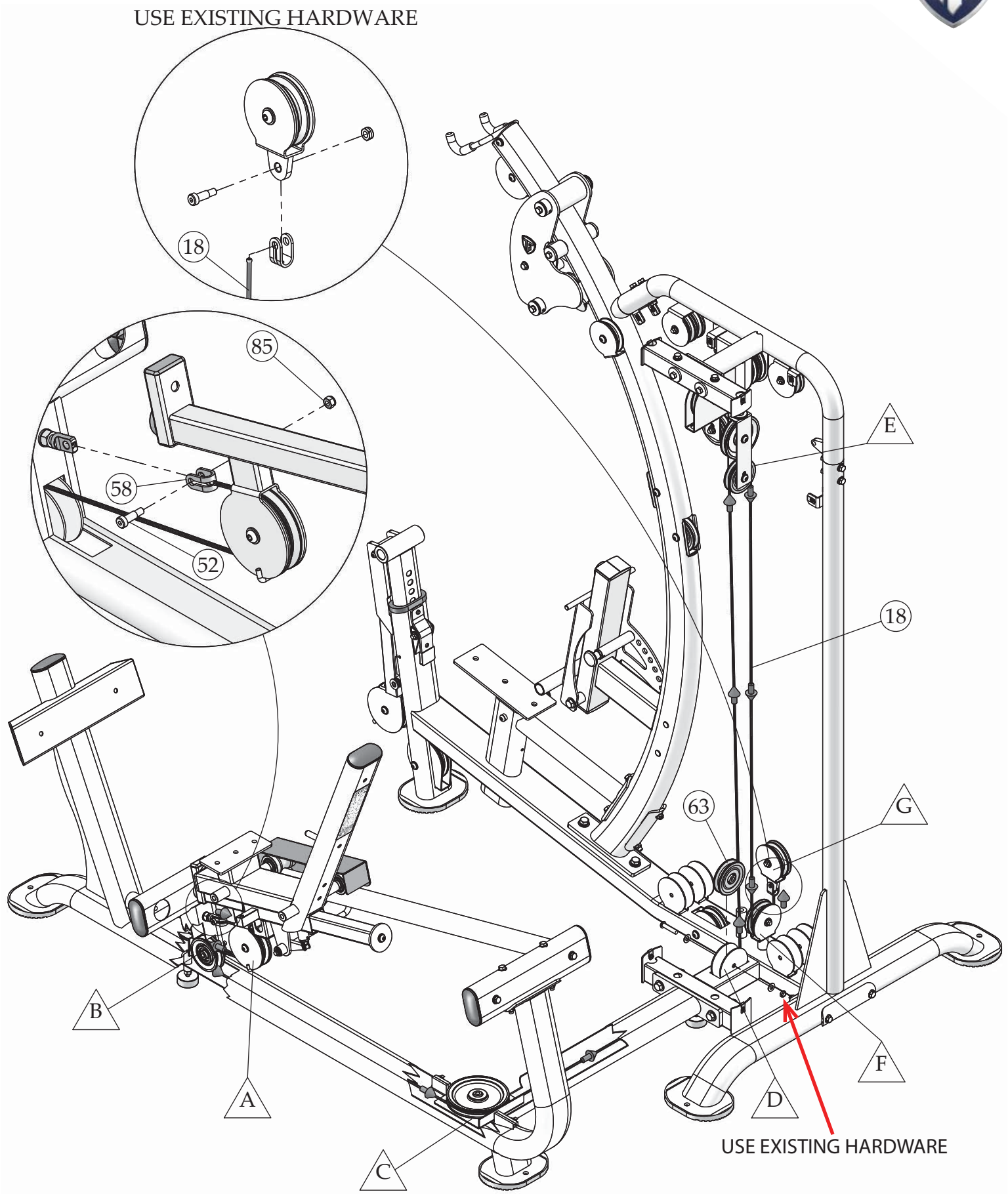

Step 6 Assembly List

Item #	Description	Qty.
18	**LEG PRESS CABLE (SXT-LP+AXT-225)**	**1**
23	BUTTON HEAD SOCKET CAP SCREW GR-8 Z/P 3/8-16 X 1 3/4	1
26	BUTTON HEAD SOCKET CAP SCREW GR-8 Z/P 3/8-16 X 4 1/2	1
32	FLAT WASHER SAE Z/P 3/8”	2
42	NYLON INSERT THIN PATTERN LOCK NUT Z/P 3/8-16	2
43	NYLON PULLEY 3/8 X 1 X 6 BLACK	1
52	SHOULDER BOLT Z/P 3/8 X 3/4	1
58	STRAP BRACKET 20 #SF20 STAINLESS STEEL	1
62	OVAL WASHER Z/P 3/8”	2
63	BLACK NYLON PULLEY 3/8 X 1 X 3 1/2	2
85	NYLON INSERT LOCK NUT Z/P 5/16-18	1

Note:

1. Skip to next step if you will be installing the SXT-LP on a SXT-550 unit.
2. Some parts not shown for clarity.
3. Assemble the pulleys shown below at the same time you route the cable.
4. Make sure cable runs between pulleys.
5. Use wire string to run cable between pulleys.

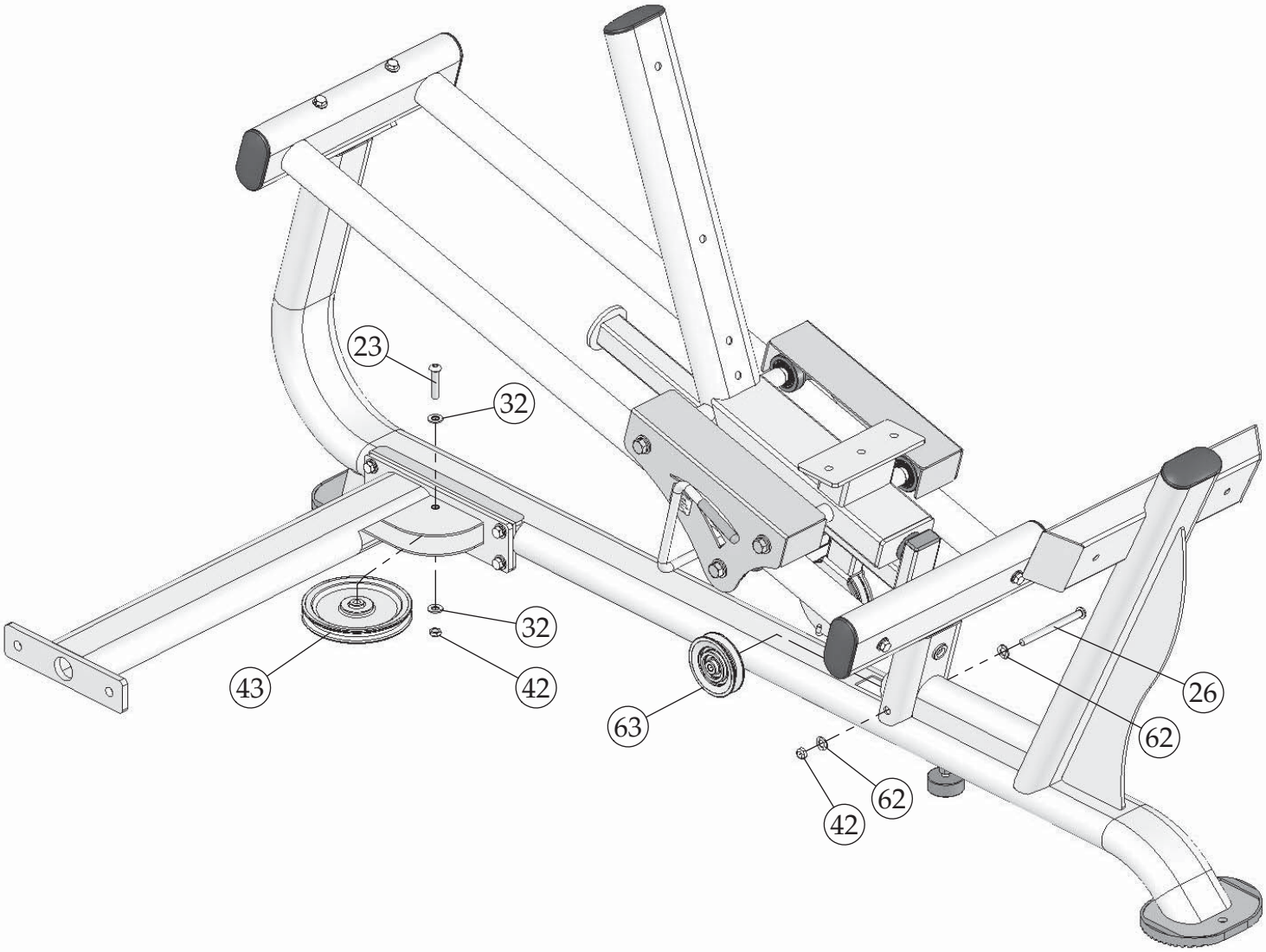

Step 6 SXT-LP+SXT-550 Cable Routing

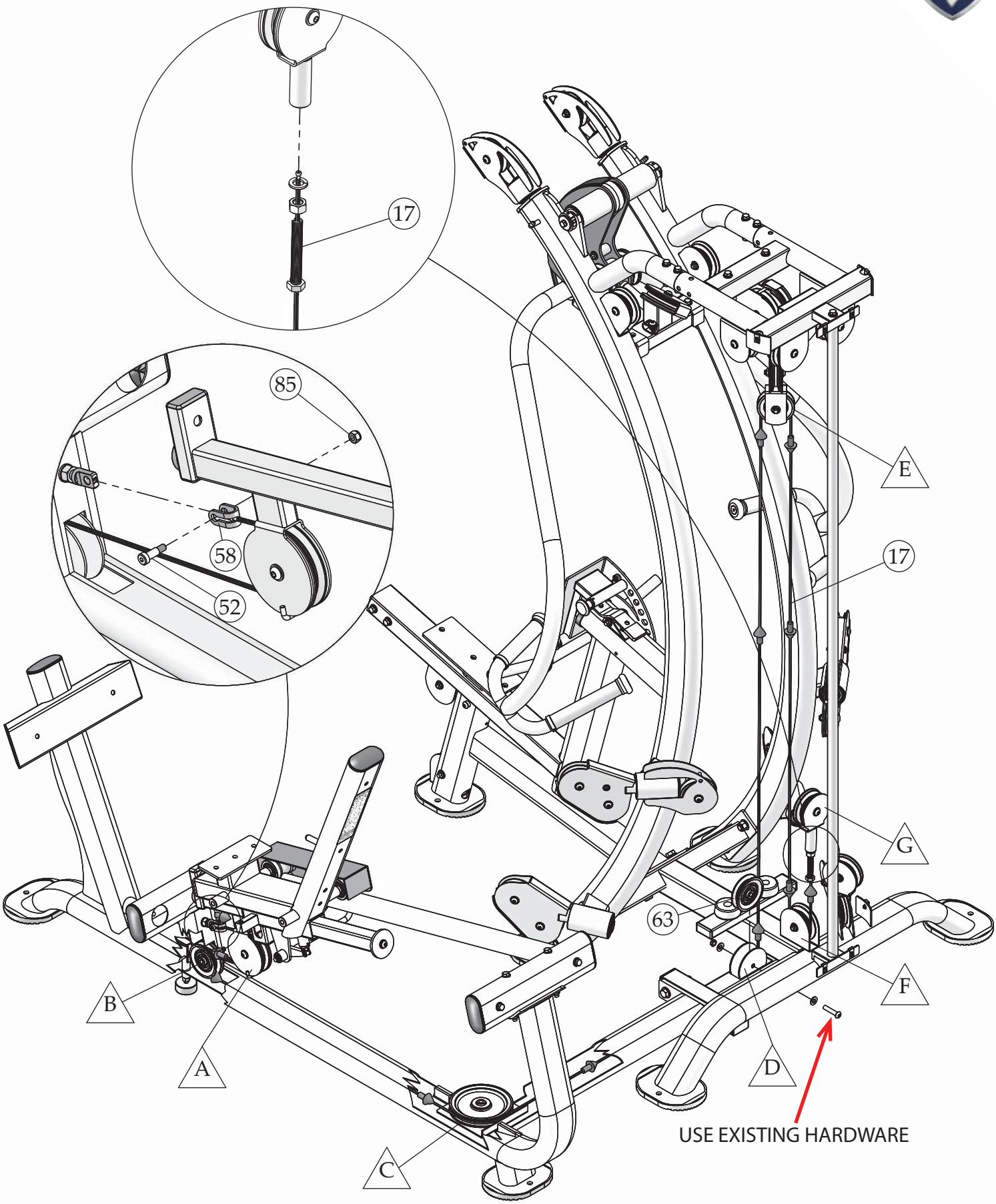

Step 6 Assembly List		
Item #	**Description**	**Qty.**
17	**LEG PRESS CABLE (SXT-LP+SXT-550)**	**1**
23	BUTTON HEAD SOCKET CAP SCREW GR-8 Z/P 3/8-16 X 1 3/4	1
26	BUTTON HEAD SOCKET CAP SCREW GR-8 Z/P 3/8-16 X 4 1/2	1
32	FLAT WASHER SAE Z/P 3/8”	2
42	NYLON INSERT THIN PATTERN LOCK NUT Z/P 3/8-16	2
43	NYLON PULLEY 3/8 X 1 X 6 BLACK	1
52	SHOULDER BOLT Z/P 3/8 X 3/4	1
58	STRAP BRACKET 20 #SF20 STAINLESS STEEL	1
62	OVAL WASHER Z/P 3/8”	2
63	BLACK NYLON PULLEY 3/8 X 1 X 3 1/2	2
85	NYLON INSERT LOCK NUT Z/P 5/16-18	1

Note:

1. Some parts not shown for clarity.
2. Assemble the pulleys shown below at the same time you route the cable.
3. Make sure cable runs between pulleys.
4. Use wire string to run cable between pulleys.

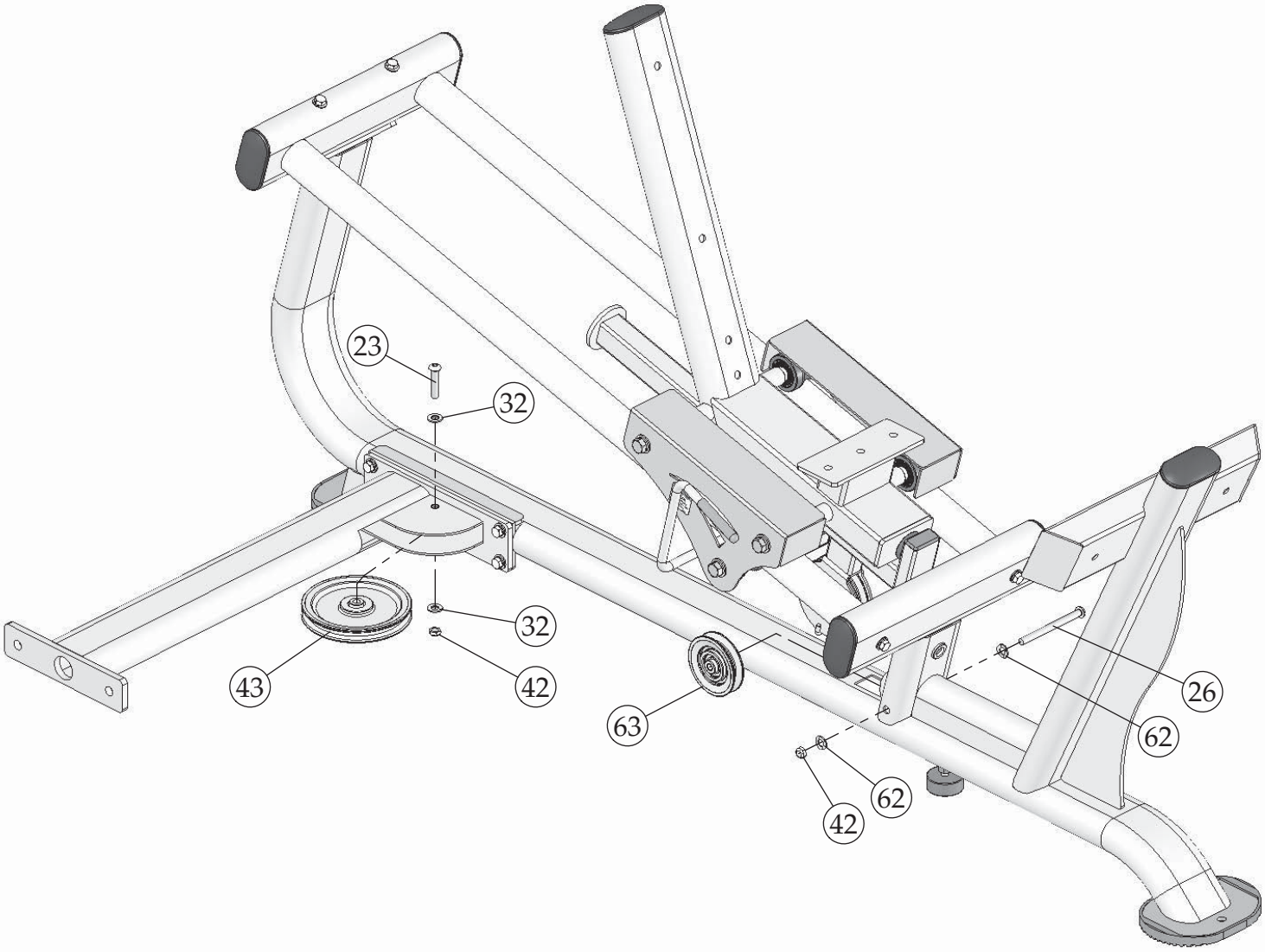

Step 7

Step Assembly List		
Item #	**Description**	**Qty.**
6	**FOOT PLATE**	**1**
30	FLAT HEAD SOCKET CAP SCREW Z/P 3/8-16 X 2 3/4	2
32	FLAT WASHER SAE Z/P 3/8”	2
42	NYLON INSERT THIN PATTERN LOCK NUT Z/P 3/8-16	2
50	RUBBER FOOT PLATE COVER	1

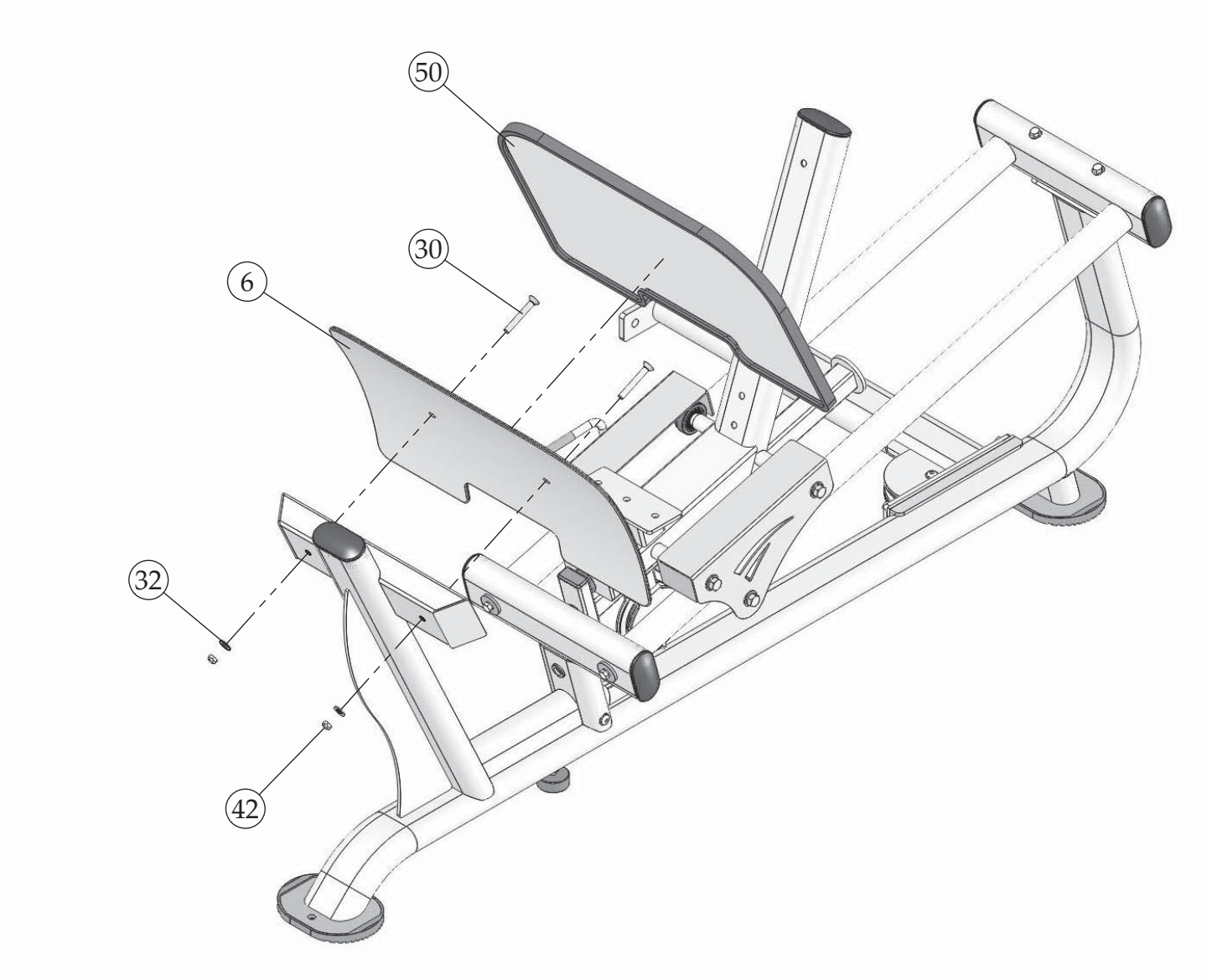

Step 8

Step Assembly List		
Item #	**Description**	**Qty.**
***7**	**HANDLES**	**1**
25	BUTTON HEAD SOCKET CAP SCREW GR-8 Z/P 3/8-16 X 3	2
32	FLAT WASHER SAE Z/P 3/8”	2
42	NYLON INSERT THIN PATTERN LOCK NUT Z/P 3/8-16	2
60	FLAT WASHER Z/P 3/8 ID X 1 1/2 OD X 3/16	2

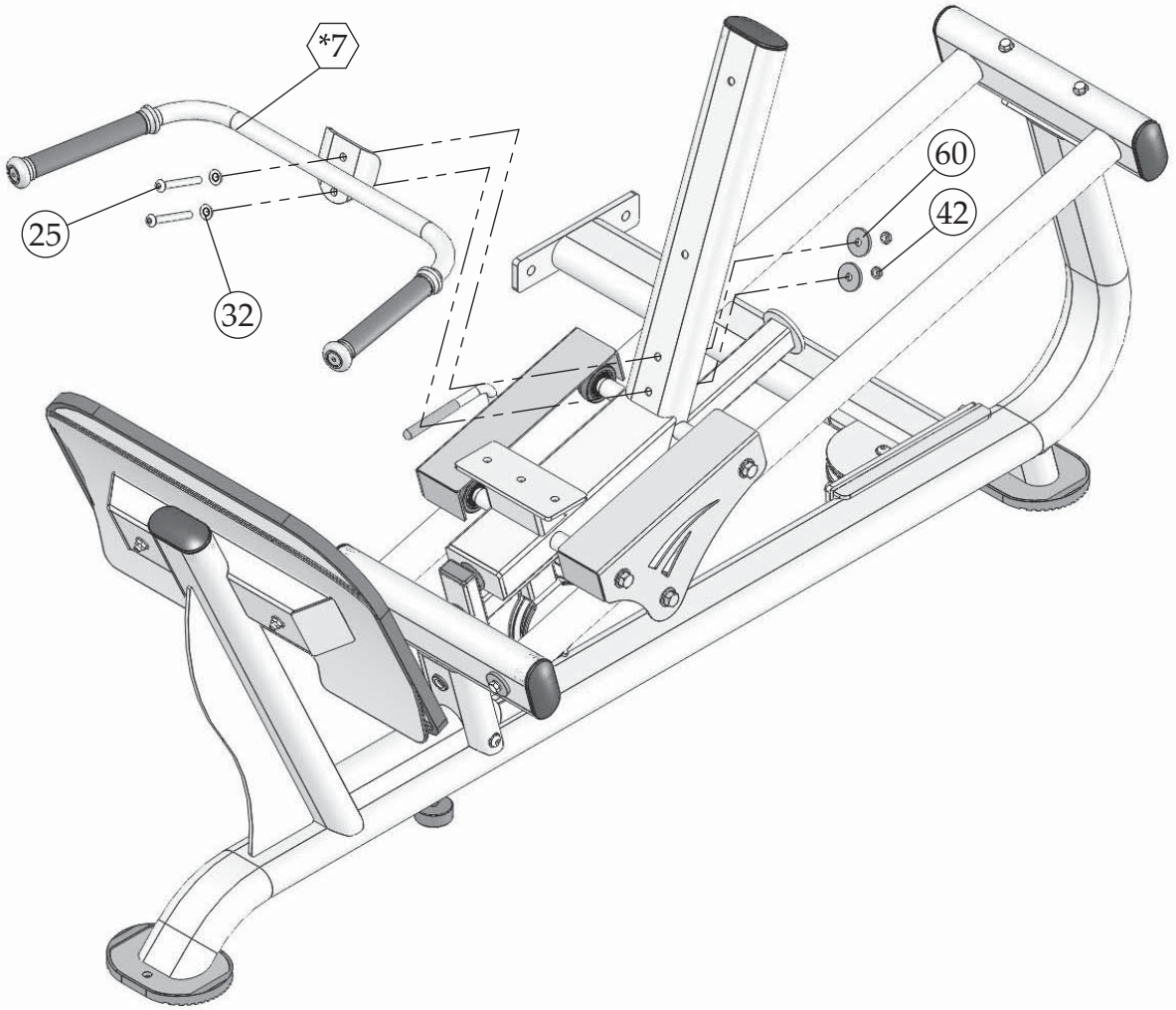

Step 9

Step Assembly List		
Item #	**Description**	**Qty.**
2	**BACK PAD**	**1**
14	**SEAT PAD**	**1**
22	BUTTON HEAD SOCKET CAP SCREW GR-8 Z/P 3/8-16 X 1 1/4	2
25	BUTTON HEAD SOCKET CAP SCREW GR-8 Z/P 3/8-16 X 3	2
32	FLAT WASHER SAE Z/P 3/8”	4

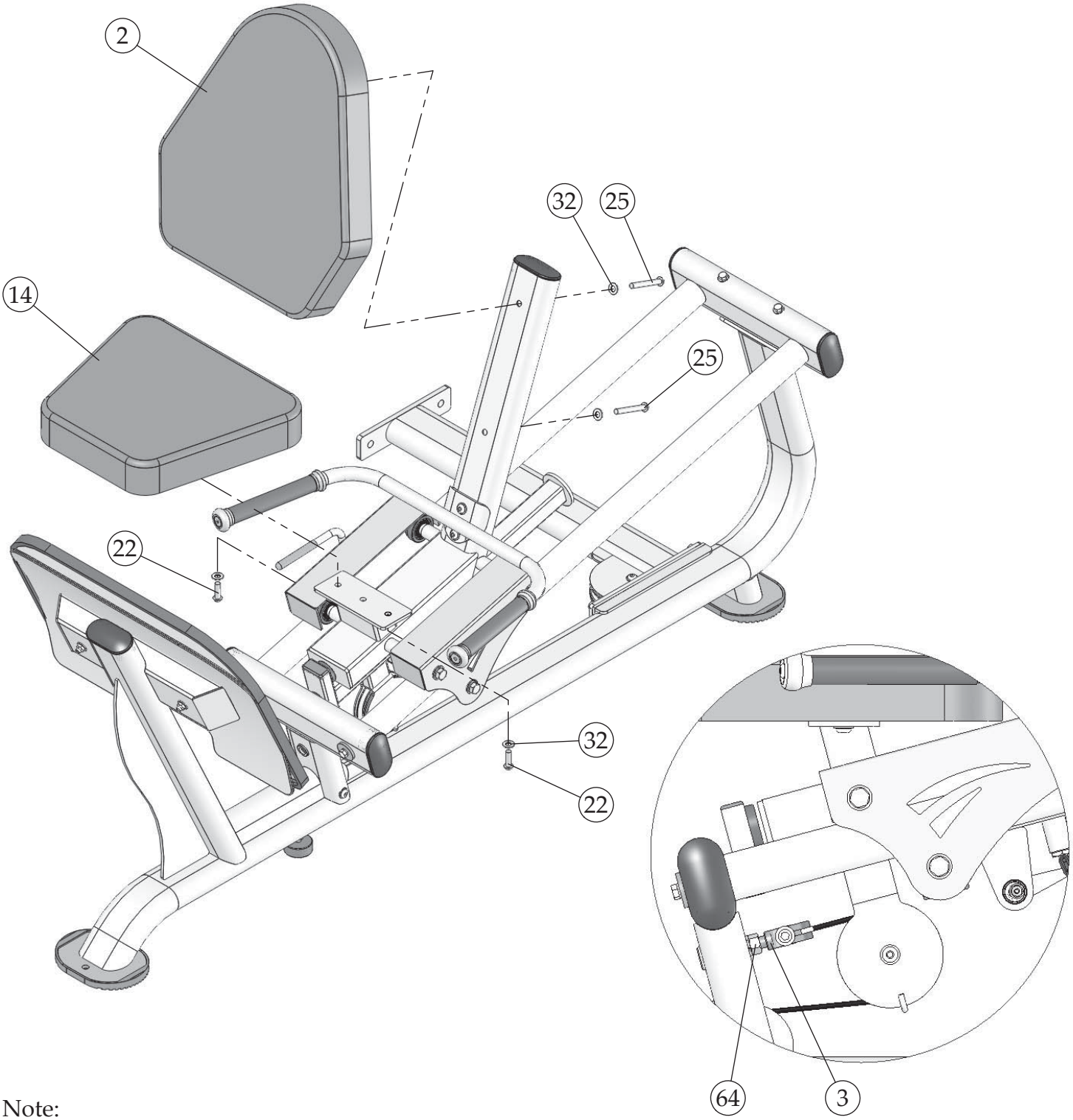

Note:
After completing this step adjust the cable by loosening the finish hex nut #64. Adjust the Cable Adjuster #3 in/out to give the cable the proper tension. Retighten nut #64.

Parts List

COLOR CHART
GRAY= SUB-ASSEMBLY PARTS
BLACK= HARDWARE

SXT-LP

Parts List

Item No.	Description	Rev.	Part No.	Qty.	Item No.	Description	Rev.	Part No.	Qty.
1	ADJUSTABLE TUBE	0	UP7767	1	42	NYLON INSERT THIN PATTERN LOCK NUT Z/P 3/8-16		BNH2026	12
2	BACK PAD	0	UP9077	1	43	NYLON PULLEY 3/8 X 1 X 6 BLACK		BNH2298	1
3	CABLE ADJUSTER	0	UP6236	1	44	PLASTIC INSERT CAP 1 X 2 10-14 GA W/NOTCH		BNH3361	2
4	CARRIAGE	0	UP7769	1	45	PLASTIC INSERT CAP 2" SQ 10-14 GA W/NOTCH		BNH3360	1
5	CROSS BRACE	0	UP7768	1	46	PLASTIC INSERT DOME CAP ELLIPTICAL 2 X 4		BNH3350	6
6	FOOT PLATE	0	UP6242	1	47	PLASTIC TUBE GLIDE 2 X 1 X 8 (HF1651600)		BNH1874	2
7	HANDLES	0	UP7773	1	48	RAIL WHEEL .50 X 2.16 RD X 2.52		BNH2472	4
8	LINEAR SHAFT HOUSING	0	UP8423	1	49	RAIL WHEEL .50 X 2.16 RD X 2.52 (1 BUSHING)		BNH4320	2
9	LINEAR SHAFT	0	UP8400	2	50	RUBBER FOOT PLATE COVER		BNH1716	1
10	MAIN FRAME	0	UP7775	1	51	RUBBER GRIP 1.1875 ID X .125 X 11		BNH3340	2
11	PLATE 1/4 X 2 3/4 RD	0	UP7866	1	52	SOCKET CAP SCREW Z/P 3/8-16 X 1 1/4		BNH2362	1
12	RAIL WHEEL AXLE	0	UP7772	1	53	SOCKET CAP SCREW Z/P 3/8-16 X 2 5/8		BNH3373	2
13	RELEASE HANDLE	0	UP7766	1	54	SOCKET SET SCREW Z/P 10-32 X 1/8		BNH2088	1
14	SEAT PAD	0	UP9078	1	55	SPLIT LOCK WASHER Z/P 1/2"		BNH0572	7
15	SIDE COVER PLATE LT	0	UP7778	1	56	SPLIT LOCK WASHER Z/P 1/4		BNH3337	1
16	SIDE COVER PLATE RT	0	UP7779	1	57	SPLIT LOCK WASHER Z/P 3/8"		BNH2520	11
17	LEG PRESS CABLE 3/16" X 234" (SXT-LP+SXT-550)	0	UP7777	1	58	STRAP BRACKET 20 #SF20 STAINLESS STEEL		BNH0562	1
18	LEG PRESS CABLE 3/16" X 213" (SXT-LP+AXT-225)	0	UP7774	1	59	URETHANE BUMPER 1 3/4		BNH0229	2
19	BLK NYLON PULLEY 12.5MM X 26.3MM X 114MM		BNH3352	1	60	FLAT WASHER Z/P 3/8 ID X 1 1/2 OD X 3/16		BNH3343	2
20	BRONZE BUSHING SAE 841 (302033) .502X.628 X 1/2 X 7/8 X 1/8"		BNH0528	2	61	ALUMINUM CAP 1.040" RD (026-01M0937)		BNH3082	2
21	BUTTON HEAD SOCKET CAP SCREW GR-8 Z/P 1/4-20 X 3/4		BNH2995	1	62	OVAL WASHER Z/P 3/8"		BNH3349	6
22	BUTTON HEAD SOCKET CAP SCREW GR-8 Z/P 3/8-16 X 1 1/4		BNH2034	2	63	BLK NYLON PULLEY 12.5MM X 26.3MM X 90MM		BNH3355	2
23	BUTTON HEAD SOCKET CAP SCREW GR-8 Z/P 3/8-16 X 1 3/4		BNH2426	2	64	FINISHED HEX NUT Z/P 1/2-13		BNH0206	1
24	ALERT SIGN FOR HOME 8 1/2 X 11		BNH3139	1	65	NYLON INSERT LOCK NUT Z/P 1/2-13		BNH2029	2
25	BUTTON HEAD SOCKET CAP SCREW GR-8 Z/P 3/8-16 X 3		BNH2673	4	66	PULL PIN LIGHT SPRING 17/32 X 1 1/4 K-105		BNH3374	1
26	BUTTON HEAD SOCKET CAP SCREW GR-8 Z/P 3/8-16 X 4 1/2		BNH2437	1	67	PULL PIN NUT 25/64 X 3/4-10 K-103		BNH0181	1
27	BUTTON HEAD SOCKET CAP SCREW Z/P 3/8-16 X 1		BNH2033	3	68	PULL PIN AXLE 1/2 X 2 9/16		BNH3359	1
28	HEX HEAD CAP SCREW GR-5 Z/P 3/8-16 X 1 1/4		BNH2038	4	69	YELLOW GRIP 1/2 X 4		BNH3059	1
29	ELLIPTICAL RUBBER SHOE		BNH3323	2	70	TFI EMBLEM 1.88 HIGH X 1.98 WIDE BLUE AND CHROME		BNH4304	2
30	FLAT HEAD SOCKET CAP SCREW Z/P 3/8-16 X 2 3/4		BNH2229	2	71	LABEL-CAUTION ADJUST LEVELER		BNH2967	1
31	FLAT WASHER SAE Z/P 1/2"		BNH2031	10	72	LABEL-CAUTION CHECKPULL PIN IS FULLY... 1 1/2 X 1 3/8		BNH2912	1
32	FLAT WASHER SAE Z/P 3/8"		BNH2030	23	73	LABEL-DANGER CHECK RETAINING NUT...1.5 X 1		BNH3146	1
33	FLAT WASHER USS Z/P 1/4"		BNH2105	1	74	LABEL-DANGER USE THIS EQUIPMENT ONLY...		BNH2903	1
34	HEX HEAD CAP SCREW GR-5 Z/P 1/2-13 X 1 1/2		BNH2171	2	75	LABEL-IMPORTANT ADJUST CABLE TENSION HERE		BNH2924	1
35	HEX HEAD CAP SCREW GR-5 Z/P 1/2-13 X 4 1/4		BNH2101	4	76	LABEL-IMPORTANT FOR SMOOTH PERFORMANCE...		BNH2916	2
36	HEX HEAD CAP SCREW GR-5 Z/P 3/8-16 X 1		BNH2037	4	77	LABEL-INSPECTIONS RECOMMENDED INSPECTION…		BNH3155	1
37	HEX HEAD CAP SCREW GR-5 Z/P 1/2-13 X 3 1/4		BNH4199	2	78	LABEL-SXT-LP EXERCISE CHART		BNH3168	1
38	HEX HEAD CAP SCREW GR-5 Z/P 3/8-16 X 4 3/4		BNH2063	2	79	LABEL-TFI SERIAL NO. 2.5 X 1.5		BNH3147	1
39	LEVER ADJUSTMENT M10		BNH3362	1	80	LABEL-WARNING KEEP BODY, HANDS... 1 1/2 X 2 5/8		BNH2909	2
40	LEVER ADJUSTMENT NUT M10		BNH3363	1	81	LABEL-WARNING SERIOUS INJURY OR DEATH		BNH3157	1
41	SINGLE STRAND CONNECTING LINK #40		BNH0066	1	82	LABEL-WARRANTY HOME LIFETIME		BNH3156	1

PRE ASSEMBLED COMPONENTS

Item No.	Description	Rev.	Part No.	Qty.	Item No.	Description	Rev.	Part No.	Qty.
*4	CARRIAGE	0	UP7769X1	1	*10	MAIN FRAME	0	UP7775X1	1
*7	HANDLES	0	UP7773X1	1	*16	SIDE COVER PLATE RT	0	UP7779X1	1
*8	LINEAR SHAFT HOUSING	0	UP8423X1	1					

Pre Assembled Components

*10 UP7775X1

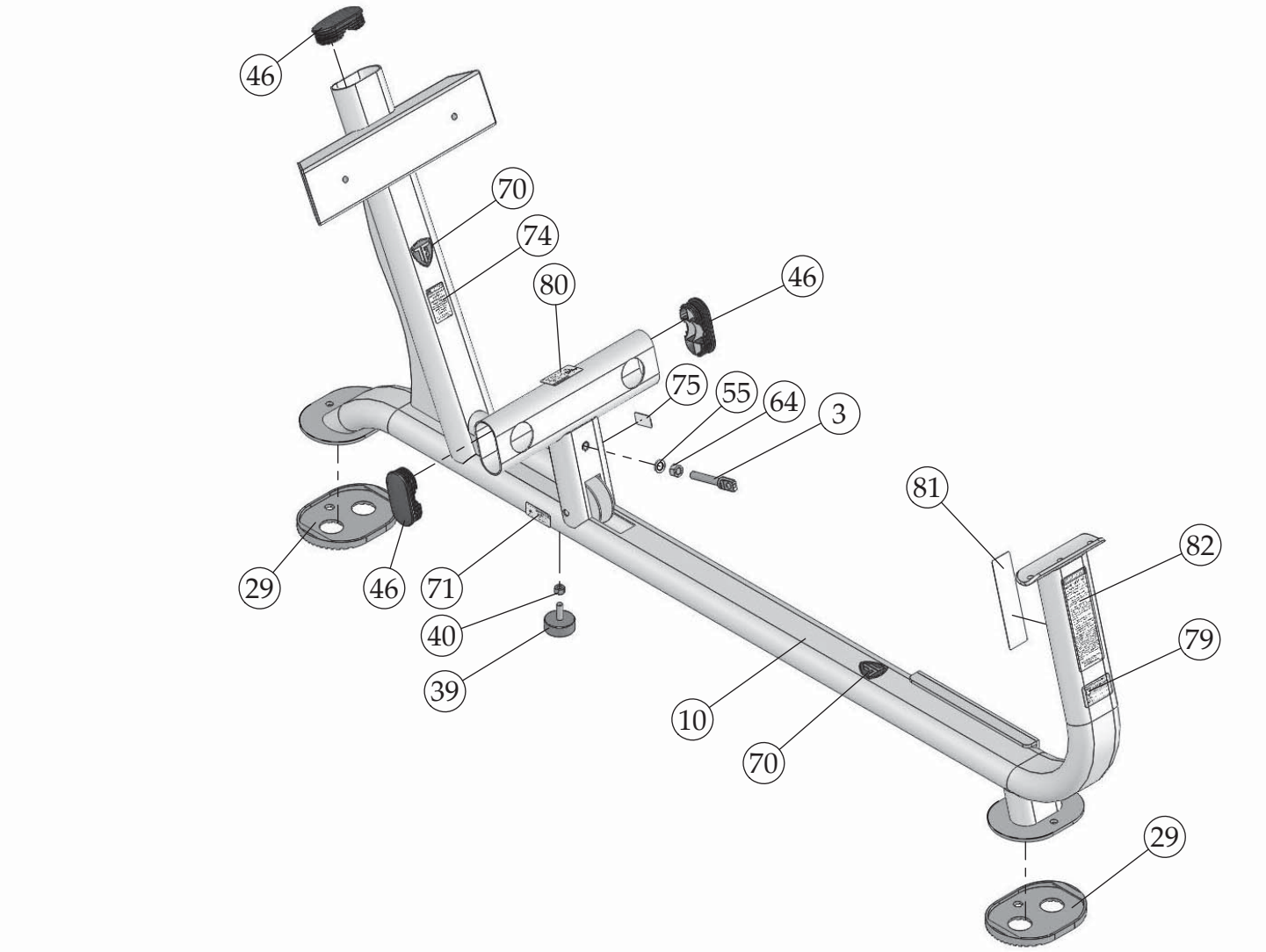

*7 UP7773X1

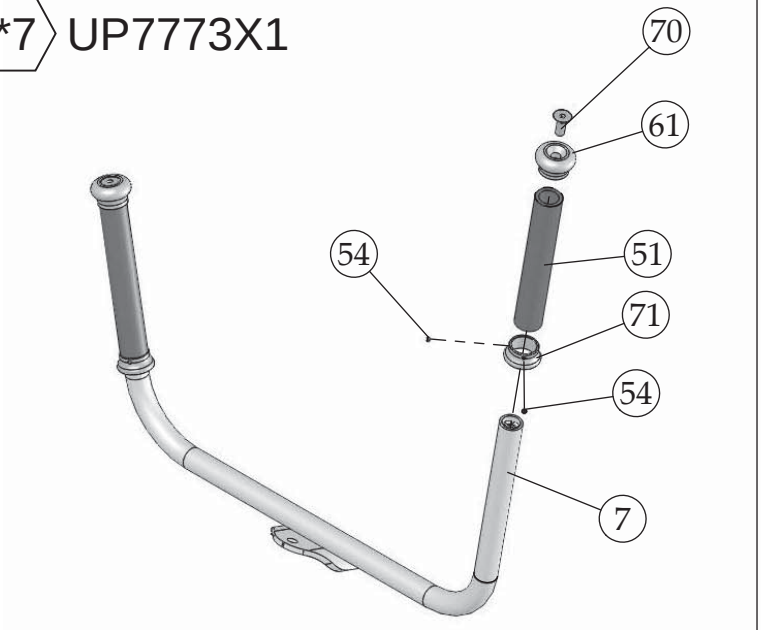

*11 UP8423X1

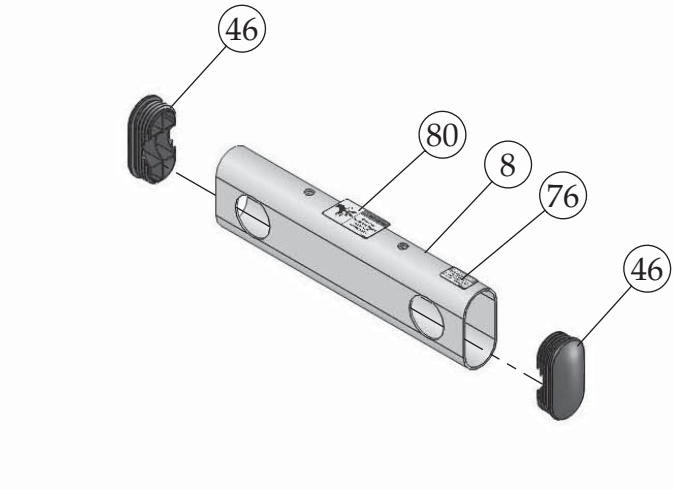

Pre Assembled Components

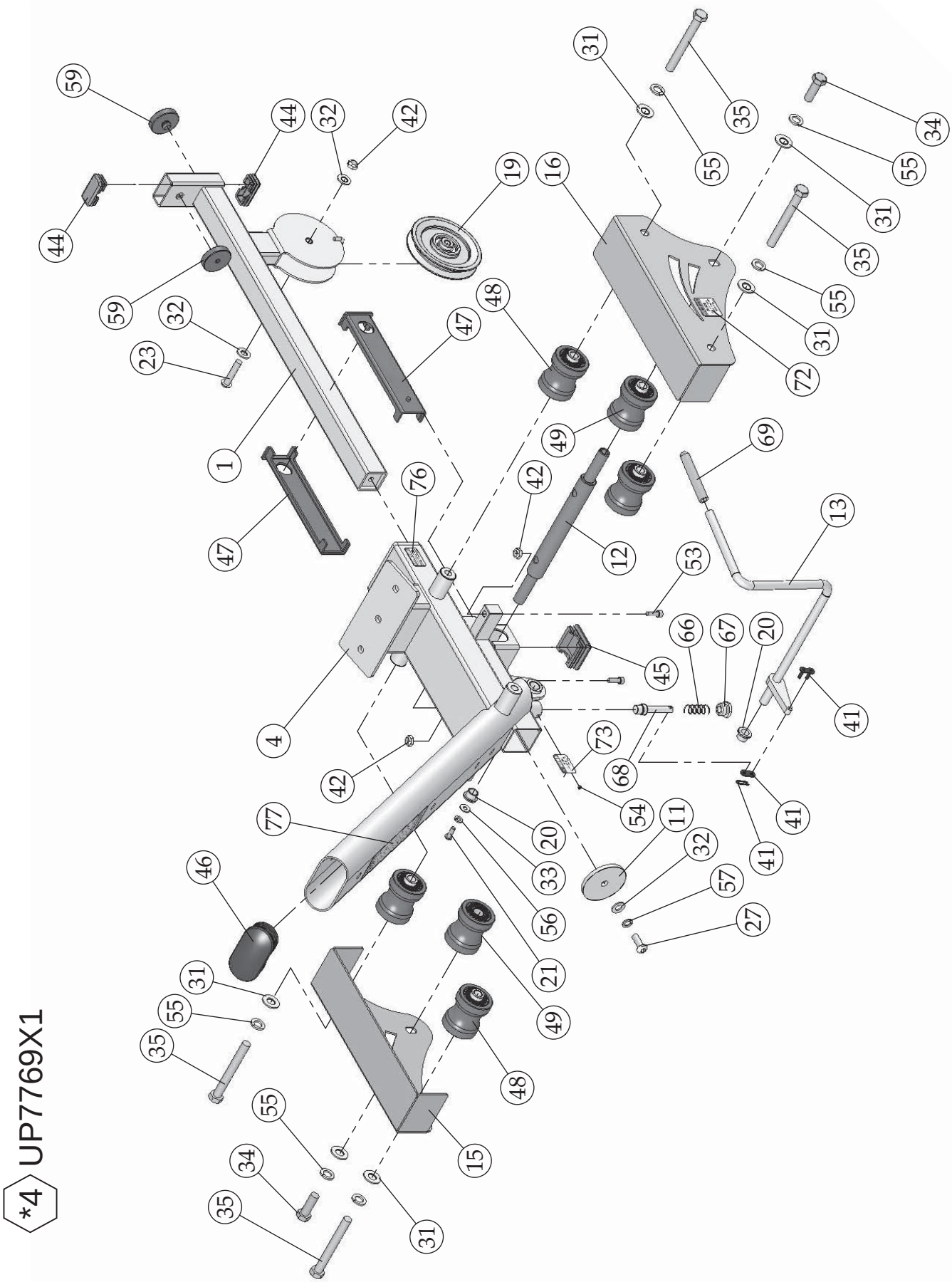

Rail Wheel Replacement

Step 1

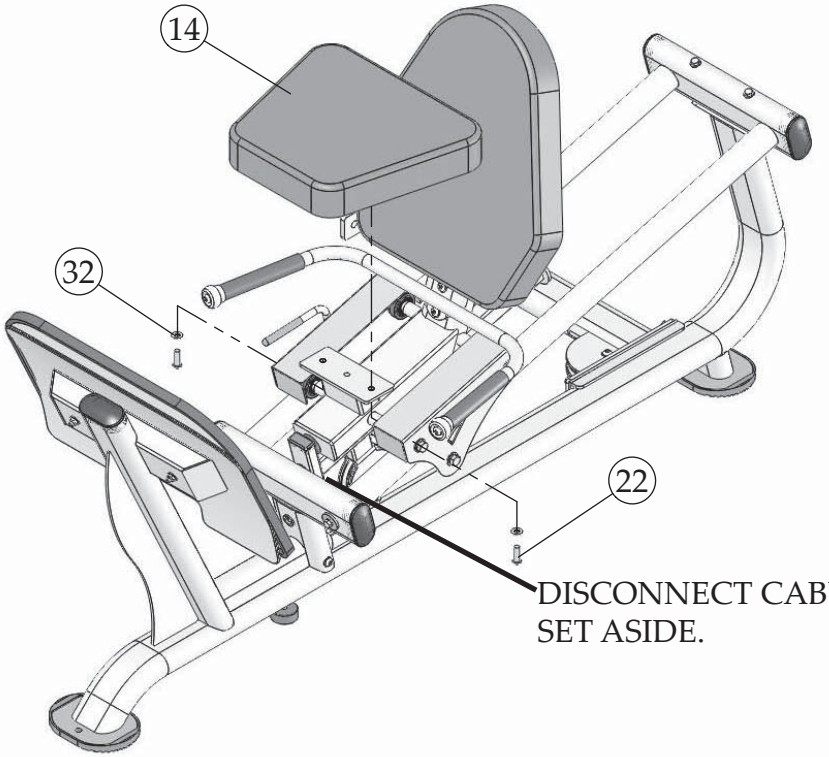

Step 2

NOTE:

1. HAVE ONE PERSON HOLD THE LINEAR SHAFTS WHILE YOU REMOVE THE LINEAR SHAFT HOUSING AND THEN SLIDE THE CARRIAGE OUT.

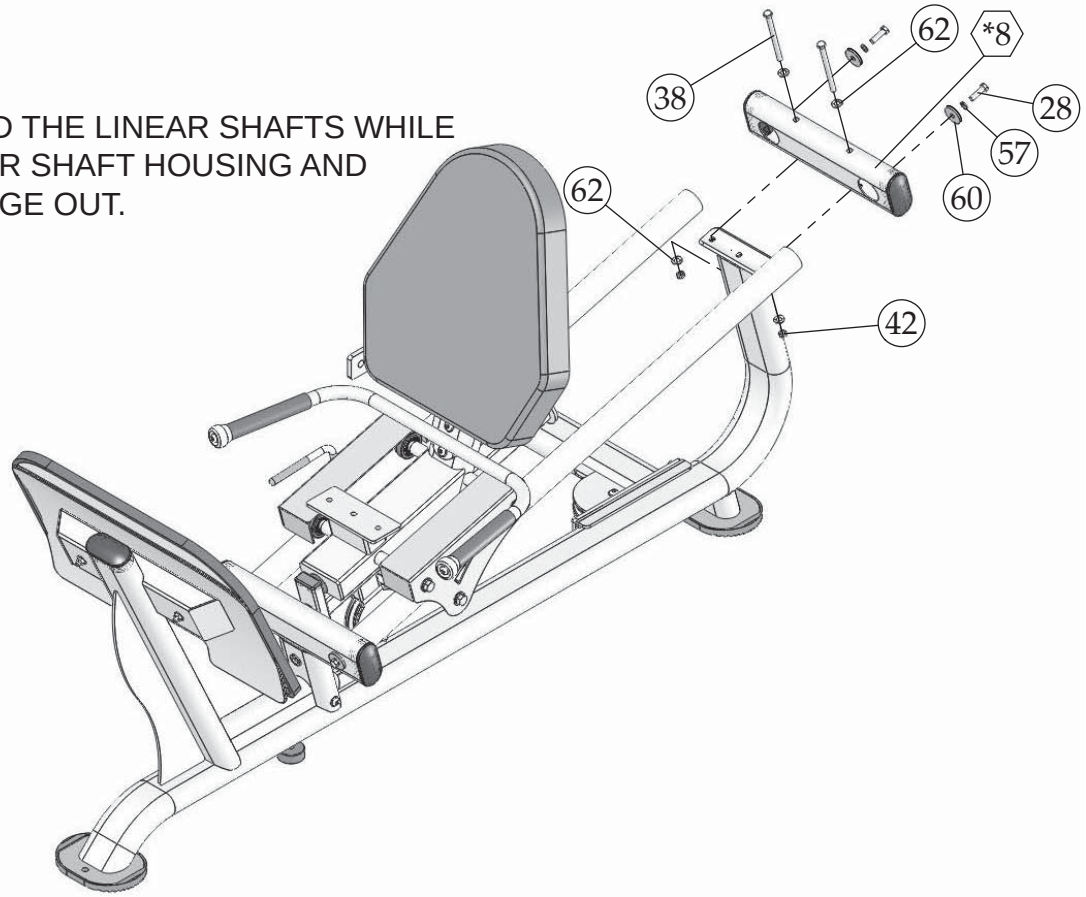

Rail Wheel Replacement

Step 3

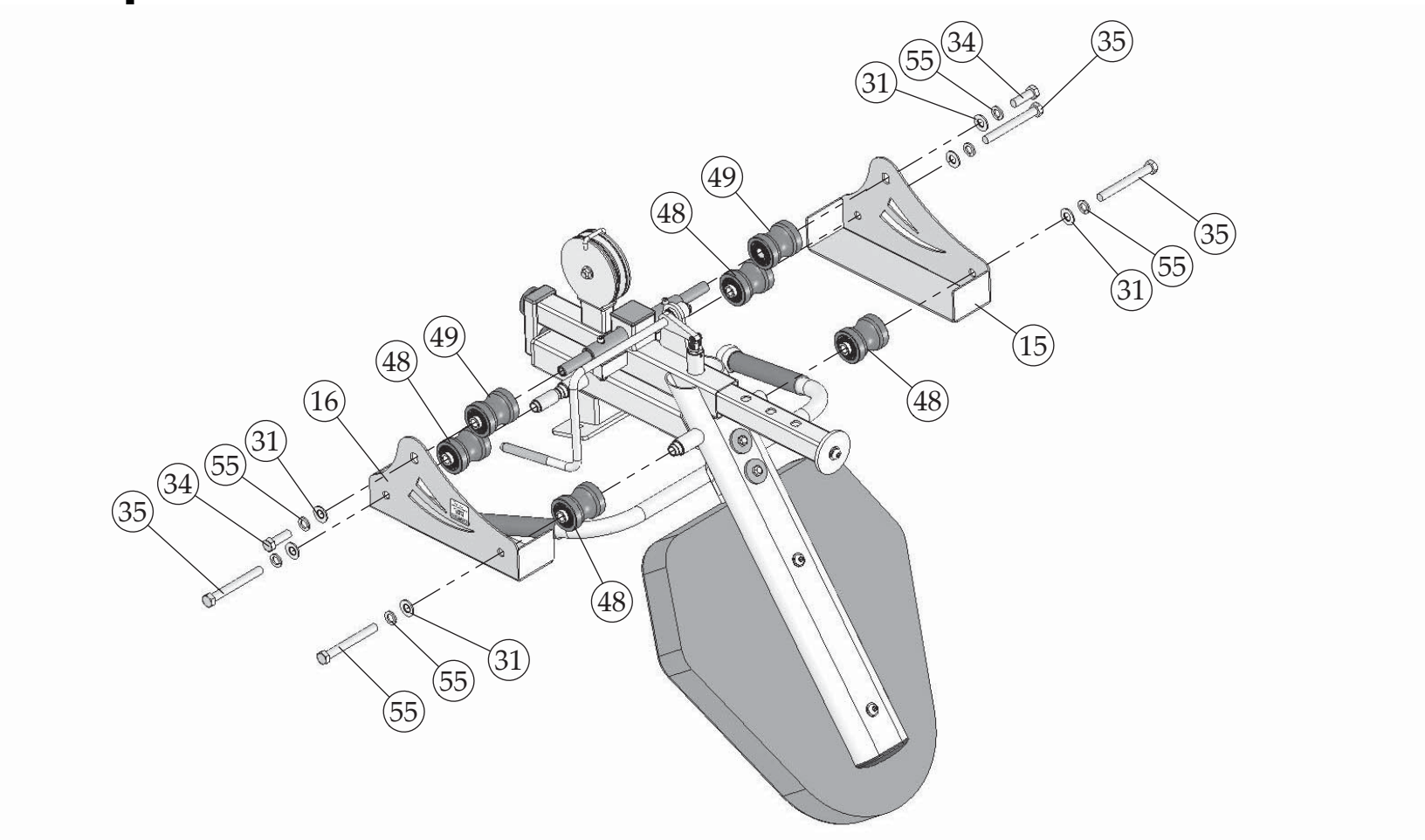

Step 4

INSTALLATION IS THE REVERSE OF REMOVAL. (DO NOT INSTALL THE SEAT PAD UNTIL COMPLETING RAIL WHEEL ADJUSTMENT ON NEXT PAGE)

Rail Wheel Adjustment Step 1

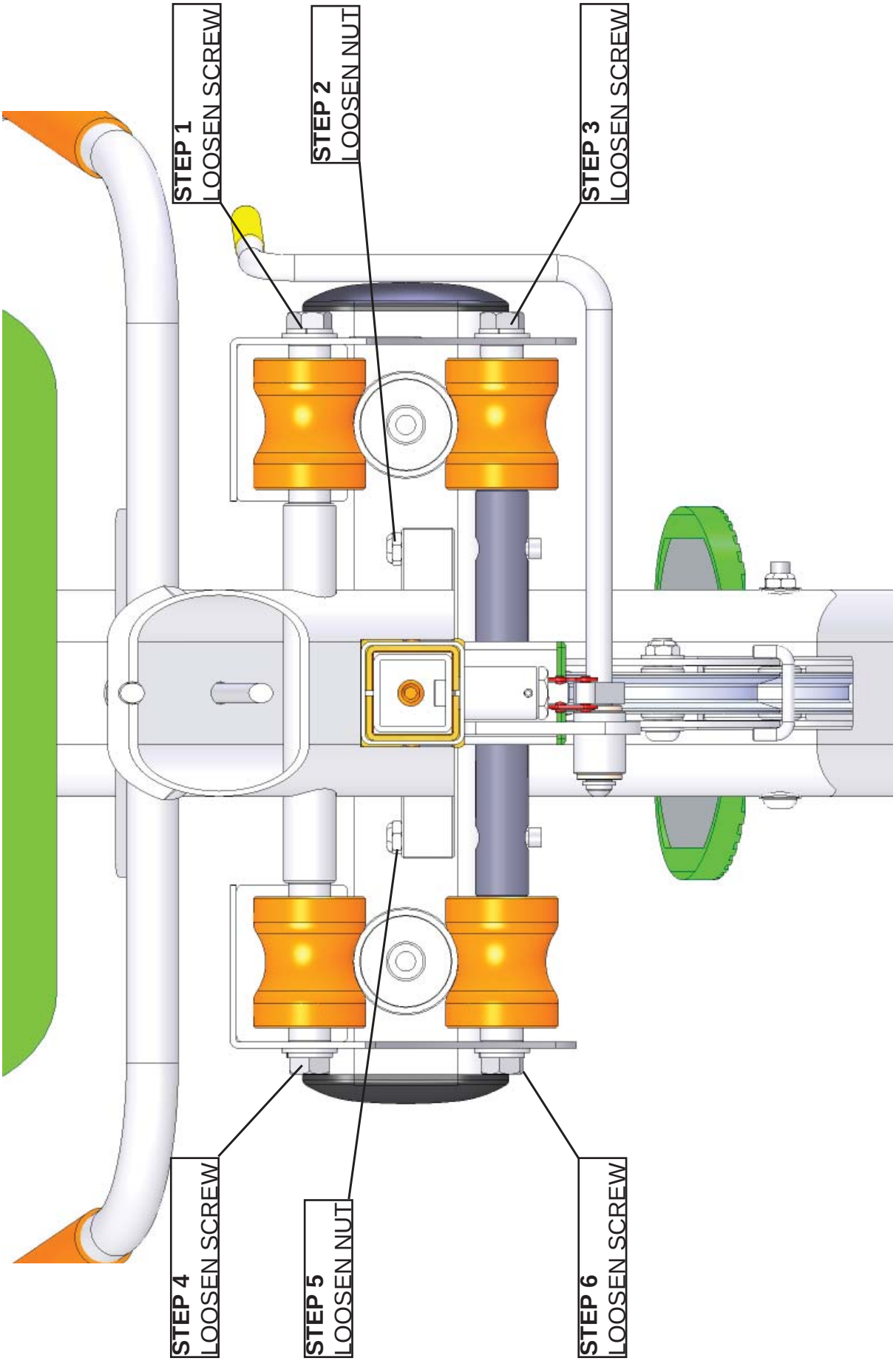

NOTE:
1. REPEAT THESE STEPS ON A NEEDED BASIS WHEN THE CARRIAGE FEELS LOOSE ON THE RAILS.

Rail Wheel Adjustment Step 2

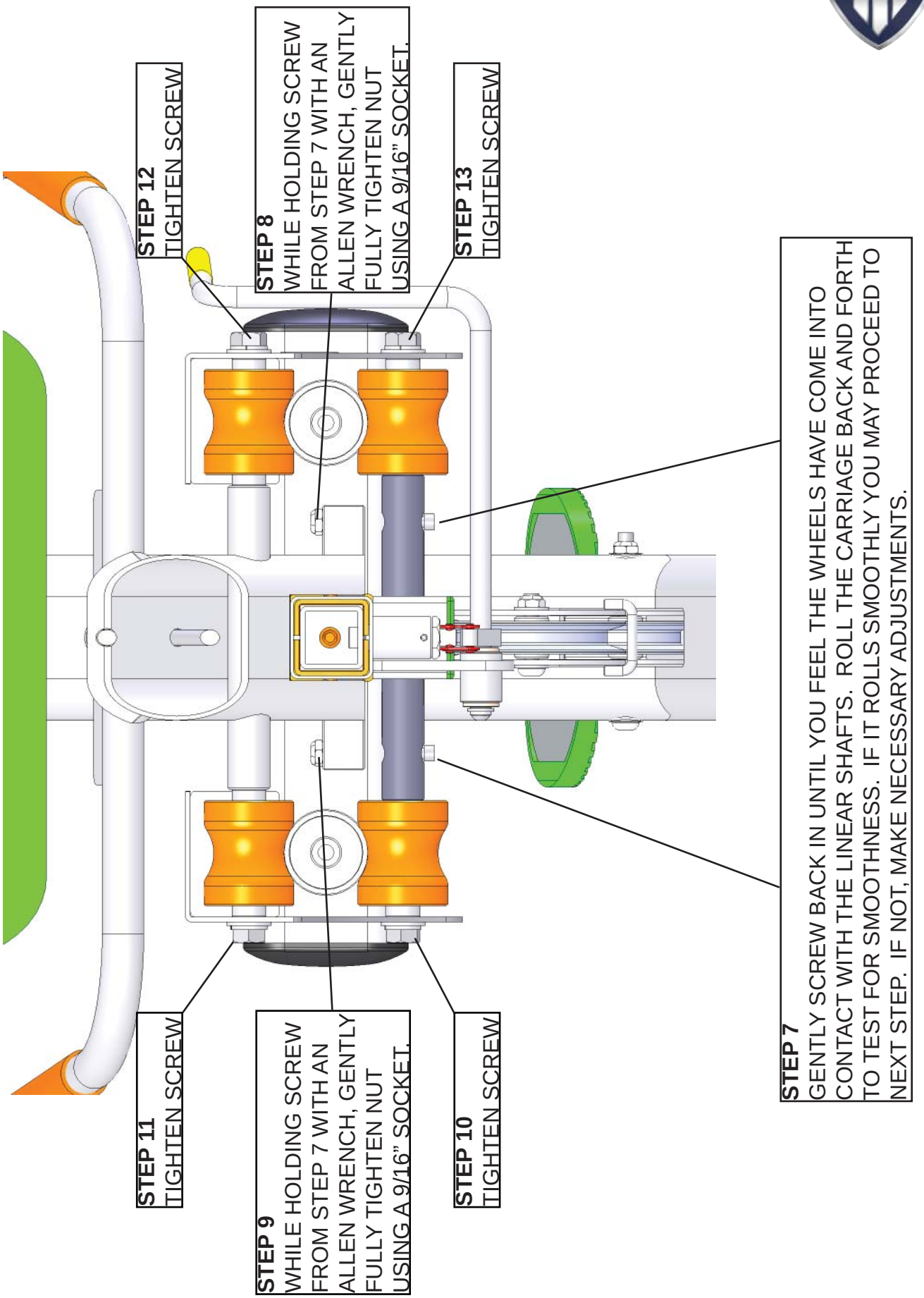

Basic Exercise Guide

Use this equipment only for the exercises as shown. Know your limitations. If you are new to weight training, always start with lighter weight, learn how to perform the exercise correctly and train at a controlled rate of speed. Warm up properly with stretchings, calisthenics or cardiovascular exercises. Never hold your breath – general rule of thumb is to exhale when you exert.

LEG PRESS

CALF RAISE

Notes

TUFFSTUFF WARRANTY

TuffStuff warrants to the original purchaser that TuffStuff equipment will be free from defects in material and workmanship. All warranty periods begin to run from the date of purchase to the original purchaser. The warranty and remedies set forth herein are conditioned upon proper storage, installation, use and maintenance and conformance with any recommendations of TuffStuff. This warranty does not cover products not manufactured by TuffStuff or products which are altered without the express written consent of TuffStuff.

HOME LIFETIME WARRANTY*:

LIFETIME of the equipment while owned by the original purchaser (applies only to defects from manufacturer only).

***This warranty does not cover:**

1. TuffStuff products sold for and used in a commercial or institutional environment.
2. Any damage, failure or loss caused by accident, misuse, neglect, abuse, improper assembly, improper maintenance, or failure to follow instructions or warnings in the owner's manual and warning labels posted on the machines.
3. Use of this apparatus in a manner for which it was not designed.
4. Original product that is altered, or the use of replacement parts and components of another manufacturer other than TuffStuff.

The obligation of TuffStuff under this warranty is limited to repairing or replacing warranted defective parts as TuffStuff may elect, at TuffStuff's facility in Chino, California, without charge to the purchaser. Purchaser is responsible for installation of repaired or replaced parts, and all transportation and insurance costs on returned or replaced equipment to and from TuffStuff's facility in Chino.

THE FOREGOING SHALL CONSTITUTE THE SOLE REMEDY OF THE PURCHASER AND THE SOLE LIABILITY OF TUFFSTUFF WITH REGARD TO WARRANTY, WHETHER EXPRESS OR IMPLIED BY OPERATION OF LAW OR OTHERWISE, INCLUDING BUT NOT LIMITED TO ANY IMPLIED WARRANTIES OF MERCHANTABILITY OR FITNESS. TUFFSTUFF SHALL IN NO EVENT BE LIABLE FOR INCIDENTAL OR CONSEQUENTIAL LOSSES, DAMAGES, OR EXPENSES IN CONNECTIONS WITH EXERCISE PRODUCTS. TUFFSTUFF'S LIABILITY HERE-UNDER IS EXPRESSLY LIMITED TO THE REPAIRS OR REPLACEMENTS OF WARRANTED DEFECTIVE PARTS.

This written warranty is the final, complete and exclusive agreement of the parties with respect to the quality or performance of the equipment and no action for breach of this written warranty or any implied warranty shall be commenced more than one (1) year after the accrual of the cause of action. No modification of this warranty or waiver of its terms shall be binding on either party unless approved in writing by an authorized representative of the party. Contact TuffStuff Fitness International, Inc. at 13971 Norton Avenue, Chino, CA 91710, before returning any defective equipment.

This warranty gives you specific legal rights and you may also have other rights, which may vary from state to state.

SERIAL # _____

Write your Serial number here for future reference

_____

Purchase Date

TuffStuff Fitness International, Inc.
13971 Norton Avenue, Chino, CA 91710, USA. Ph 909-629-1600 Fx 909-629-4967
www.tuffstuffitness.com service@tuffstuff.net or service1@tuffstuff.net